CAMERAS FRAME GRABBERS IMAGING SOLUTIONS

BOBCAT Camera Hardware User's Manual

Camera Link® PoCL, GigE Vision®, GEV (PoE), and CoaXPress

IMPERX DIGITAL CAMERAS:

INTELLIGENT, HIGH RESOLUTION, FIELD UPGRADEABLE, PROGRAMMABLE, 8/10/12/14 BIT



NOTICE

IMPERX products are not intended for use in life support appliances, devices, or systems where malfunction of these products can reasonably be expected to result in personal injury. IMPERX customers using or selling these products for use in such applications do so at their own risk and agree to fully indemnify IMPERX for any damages resulting from such improper use or sale.

Copyright © 2014, IMPERX Inc. All rights reserved. All information provided in this manual is believed to be accurate and reliable. IMPERX assumes no responsibility for its use. IMPERX reserves the right to make changes to this information without notice. Redistribution of this manual in whole or in part, by any means, is prohibited without obtaining prior permission from IMPERX.

IMPERX
6421 Congress Ave.
Boca Raton, FL 33487
+1 (561) 989-0006

Rev. 2.1.1
9/26/2017
www.imperx.com

Revision History

Rev 0.2	03/23/09	P. Dinev	Initial Pre-Release – Old UART protocol
Rev 0.3	07/31/09	P. Dinev	Old UART removed, added new UART protocol and new register addresses.
Rev 0.4	08/25/09	P. Dinev	Image Enhancement section, AOI8 modes added.
Rev 0.5	08/27/09	P. Dinev	Figure 2.27a and related text changed.
Rev 0.6	01/15/10	P. Dinev	B0620, B2520 cameras added, all related tables and figures updated. Minor errors fixed.
Rev 0.7	03/02/10	P. Dinev	B1620, B1920 cameras added, all related tables and figures updated. Minor errors fixed.
Rev 0.8	03/12/10	P. Dinev	B2020, B4020 and B4820 cameras added, all related tables and figures updated. Minor errors fixed.
Rev 0.9	04/12/10	P. Dinev	GEV option added to all cameras, all related tables and figures updated. Minor errors fixed.
Rev 1.0	04/25/10	P. Dinev	Official Release
Rev 1.1	10/10/10	P. Dinev	Minor errors fixed.
Rev 1.2	12/30/10	P. Dinev	Minor errors fixed. 3x8 RGB out and WB feature added
Rev 2.0	01/10/12	B. Gisonni	Minor errors fixed. Added cameras in Bobcat series – B1310, B1411, B1020, B1320, B1621, B1921, B2320, B3320, B4821 and B6620. Major feature TRUESENSE.
Rev 2.0.1	04/02/12	B.Gisonni	Minor errors fixed.
Rev 2.0.2	04/12/12	B.Gisonni	Minor errors fixed. Software Bit Toggle, CamConfig GUI Basic and new screens.
Rev 2.0.3	09/18/12	A.Moreno	Warranty period changed from 1 year to 2 years.
Rev 2.0.4	09/26/12	A.Moreno	B2510, B1922 cameras added.
Rev 2.0.5	10/22/12	A.Moreno	B6640, B3340 4 tap cameras added. New Ordering Table
Rev 2.0.6	03/27/13	A.Moreno	Lens Controller added for CLB, C-Mount CLM, and GEV cameras.
Rev 2.0.7	05/30/13	A.Moreno	GEV Camera Connectivity added to manual. Section 1.4.3
Rev.2.0.8	01/08/14	A.Moreno	Added New CLB/CLM/GEV/GEV(PoE)/CXP Camera Information. All related tables, figures, and mechanical drawings were added.
Rev.2.0.9	03/19/14	M. Pangburn	Fixed links to Table of Contents
Rev.2.1.0	04/26/14	A. Moreno	Fixed TOC numbering errors. Added reference to the Sensor and Filter Cleaning Procedure document in section 1.4.3.
Rev.2.1.1	11/17/16	K. Wetzel	Added information about the rising edge of the trigger signal to section 2.6.4 Triggering Modes, B. Fast Synchronized Triggering – Rapid Capture.
Rev. 2.1.1	2/20/17	R. Johnston	Replaced zinc aluminum alloy and anodized aluminum with 6000 series aluminum alloy in section 1.4.1.

TABLE OF CONTENTS

CHAPTER 1 – INTRODUCTION 20

1.1 GENERAL DESCRIPTION 24

1.2 BOBCAT SPECIFICATIONS 26
1.2.1 General Information 26
1.2.2 Spectral Response 29
1.2.3 Bayer and TRUESENSE Pattern Information 32
1.2.4 Technical Specifications 33

1.3 CAMERA CONNECTIVITY 49
1.3.1 CLB (Base) - Camera Link (CL) Output 49
1.3.2 CLM (Medium) - Camera Link (CL) Output 55
1.3.3 GigE (GEV) Camera Output 62
1.3.4 CoaXPress (CXP) Camera Output 65
1.3.5 Power Supply 68

1.4 MECHANICAL, OPTICAL, and ENVIRONMENTAL 69
1.4.1 Mechanical 69
1.4.2 Optical 69
1.4.3 Environmental 70

CHAPTER 2 – CAMERA FEATURES 105

2.1 IMAGE RESOLUTION 106
2.1.1 Normal Mode – Single Output 106
2.1.2 Normal Mode – Dual Output 107
2.1.3 Normal Mode – Quad Output 108
2.1.4 Center Mode 109

2.2 FRAME TIME CONTROL 113
2.2.1 Internal Line and Frame Time Control 113
2.2.2 Camera Speed Control 113
2.2.3 External Line and Frame Time Control 115

2.3 REGION OF INTEREST 115
2.3.1 Horizontal and Vertical Window 115
2.3.2 Calculating the Frame Rate using Vertical Window 118

2.4 BINNING 160

2.5 EXPOSURE CONTROL 165

2.5.1 Internal Exposure Control - Electronic Shutter 165
2.5.2 External exposure control 165
2.5.3 Variable Frame Time – Programmable Line and Frame Time 165
2.5.4 Automatic Exposure Control (AEC) 166
2.5.5 Automatic Iris Control (AIC) 167

2.6 EXTERNAL TRIGGER 168
2.6.1 Triggering Inputs 168
2.6.2 Acquisition and Exposure Control 168
2.6.3 Trigger Strobe Control 169
2.6.4 Triggering Modes 169

2.7 STROBE OUTPUT 174

2.8 GAIN and OFFSET 175
2.8.1 Analog Domain – manual control 175
2.8.2 Digital Domain – manual control 176
2.8.3 Automatic Gain Control (AGC) 176

2.9 DATA OUTPUT FORMAT 177
2.9.1 Bit Depth 177
2.9.2 Digital Data Shift 178
2.9.3 Output Format 178

2.10 PULSE GENERATOR 182

2.11 I/O CONTROL 183
2.11.1 I/O Mapping 183
2.11.2 Electrical Connectivity 184

2.12 TEST IMAGE PATTERNS 187
2.12.1 Test Image patterns 187
2.12.2 Image Superimposition 187

2.13 WHITE BALANCE AND COLOR CONVERSION 188
2.13.1 White Balance 188
2.13.2 Color (Bayer to RGB) Conversion 188

2.14 DYNAMIC BLACK LEVEL CORRECTION AND TAP BALANCING 189
2.14.1 Black Level Correction 189
2.14.2 Tap Balancing 189

2.15 TRANSFER FUNCTION CORRECTION – USER LUT 190
2.15.1 Standard Gamma Correction 190
2.15.2 User Defined LUT 191

2.16 DEFECTIVE PIXEL CORRECTION 192
2.16.1 Static Pixel Correction 192
2.16.1 Dynamic Pixel Correction 193

2.17 FLAT FIELD CORRECTION 194

2.18 NEGATIVE IMAGE 196

2.19 CAMERA INTERFACE 197
2.19.1 Status LED 197
2.19.2 Temperature Monitor 197
2.19.3 Exposure Time Monitor 197
2.19.4 Frame Time Monitor 198
2.19.5 Current image size 198

2.20 LENS CONTROLLER 198

CHAPTER 3 – DIGITAL IMAGE PROCESSING 199

3.1 OVERVIEW 200

3.2 IMAGE ENHANCEMENT 200
3.2.1 Threshold Operation 200
3.2.2 Multi Point Correction 202

CHAPTER 4 – CAMERA CONFIGURATION 206

4.1 OVERVIEW 207

4.2 CAMERA CONFIGURATION 207
4.2.1 Configuration Memory – parameter FLASH 207
4.2.3 Camera Serial Protocol 208

4.3 CAMERA CONFIGURATION REGISTER DESCRIPTION 213
4.3.1 Startup Procedure 213
4.3.2 Saving and Restoring Settings 213
4.3.3 Retrieving Manufacturing Data 215
4.3.4 Camera Information Registers 217
4.3.5 Image Size (AOI) Workspace Registers 219
4.3.6 Exposure Control Workspace Registers 226
4.3.7 AEC, AGC, AIC Workspace Registers 227
4.3.8 Video Amp, Gain and Offset Workspace Registers 230
4.3.9 Triggering Workspace Registers 233
4.3.10 Pulse Generator Workspace Registers 236
4.3.11 Test Pattern Workspace Registers 237

4.3.12 Input/output Workspace Registers 239
4.3.13 Output Data Format 244
4.3.14 White Balance Workspace Registers 245
4.3.15 Color Conversion Workspace Registers 246
4.3.16 Data Correction Workspace Registers 247

4.4 DATA PROCESSING REGISTER DESCRIPTION 248
4.4.1 Image Enhancement Workspace Registers 248

4.5 LENS CONTROLLER REGISTER DESCRIPTION 250
4.5.1 Lens Controller Workspace Registers 250

CHAPTER 5 – CONFIGURATION UTILITY FOR BOBCAT CL CAMERAS 253

5.1 OVERVIEW 254

5.2 DISCOVERY PROCEDURE 254

5.3 GRAPHICAL USER INTERFACE 255

5.4 MAIN GUI MENU 257

5.5 VIEW GUI WINDOWS 261

5.6 GUI HELP 262

5.7 PARAMETER WINDOWS 263
5.7.1 Video Amp 263
5.7.2 I/O Control 264
5.7.3 Trigger 266
5.7.4 Pulse Generator 268
5.7.5 Exposure 269
5.7.6 Test Image 272
5.7.7 Area of Interest (AOI) 273
5.7.8 Strobe Control 275
5.7.9 Color 276
5.7.10 Processing 277
5.7.11 Data Output 279
5.7.12 Lens Control 281

CHAPTER 6 – GEN>CAM REFERENCE MANUAL 284

6.1 INTRODUCTION 285

6.2 NODE TREE 286

6.2.1 Device Information 286
6.2.2 IP Engine 286
6.2.3 GigE Vision Transport Layer 286
6.2.5 Acquisition and Trigger Controls 288
6.2.6 Counters and Timers Controls 288
6.2.7 Analog Controls 290
6.2.8 Test Mode 290
6.2.9 User Sets 290
6.2.10 Custom Features 291

CHAPTER 7– BOBCAT WARRANTY AND SUPPORT 294

7.1 ORDERING INFORMATION 295

7.2 TECHNICAL SUPPORT 296

7.3 WARRANTY 297

APPENDIX A – CAMERA CONFIGURATION REFERENCE 298

A.0 ABBREVIATIONS 299

A.1 SAVING AND RESTORING REGISTERS 299

A.2 CAMERA INFORMATION REGISTERS 299

A.3 IMAGE SIZE (AOI) REGISTERS 300

A.4 EXPOSURE CONTROL REGISTERS 301

A.5 VIDEO REGISTERS 301

A.6 AEC, AGC, AIC REGISTERS 302

A.7 TRIGGER REGISTERS 302

A.8 PULSE GENERATOR REGISTERS 303

A.9 TEST PATTERN REGISTERS 303

A.10 STROBE REGISTERS 303

A.11 INPUT AND OUTPUT REGISTERS 304

A.12 OUTPUT DATA FORMAT REGISTERS 304

A.13 WB AND COLOR CORRECTION REGISTERS 305
A.14 DATA CORRECTION REGISTERS 305
A.15 PROCESSING REGISTERS 305
A.16 LENS CONTROL REGISTERS 305
A.17 MANUFACTURING DATA REGISTERS 306

APPENDIX B – CREATING LOOUP TABLES 307

B.1 OVERVIEW 308
B.2 USING AN ASCII TEXT EDITOR 308
B.3 USING MICROSOFT EXCEL 309

APPENDIX C – CREATING DPC AND HPC TABLES 310

C.1 OVERVIEW 311
C.2 USING AN ASCII TEXT EDITOR 311

APPENDIX D - SOFTWARE INSTALLATION CL 312

APPENDIX E - FIRMWARE UPGRADE-CL 314

E.1 OVERVIEW 315
E.2 BOBCAT UPGRADE 315

APPENDIX F - FIRMWARE UPGRADE 319

F-1 Overview: 320
F-2 RGS Upgrade 323
F-3 IP Engine Install 324

APPENDIX G – POWER SUPPLIES 326

FIGURES

FIGURE 1.0A – INTERLINE CCD PIXEL STRUCTURE. 27

FIGURE 1.0B – TRUESENSE COLOR FILTER INTERLINE CCD PIXEL STRUCTURE.27

FIGURE 1.1A – KAI (TRUESENSE) CCD TYPICAL MONO SPECTRAL RESPONSE. 29

FIGURE 1.1B – KAI (TRUESENSE) CCD TYPICAL UV SPECTRAL RESPONSE. 29

FIGURE 1.1C – KAI (TRUESENSE) CCD TYPICAL COLOR SPECTRAL RESPONSE.30

FIGURE 1.1D – TRUESENSE CCD TYPICAL SPECTRAL RESPONSE WITH AR COATED COVER GLASS. 30

FIGURE 1.2A – ICX (SONY) CCD TYPICAL MONO SPECTRAL RESPONSE. 31

FIGURE 1.2B – ICX (SONY) CCD TYPICAL COLOR SPECTRAL RESPONSE. 31

FIGURE 1.3 – BAYER PATTERN ARRANGEMENT. 32

FIGURE 1.3A – TRUESENSE PATTERN ARRANGEMENT. 32

FIGURE 1.4 – CLB CAMERA BACK PANEL – BASE CAMERA LINK OUTPUT 49

FIGURE 1.4A – CLB CAMERA OUTPUT CONNECTOR 50

FIGURE 1.4B – CLB CAMERA POWER CONNECTOR 52

FIGURE 1.4C – CLB CAMERA SERIAL/LENS CONTROL PIN-OUTS 53

FIGURE 1.5 – CLM CAMERA BACK PANEL – MEDIUM CAMERA LINK OUTPUT 55

FIGURE 1.5A – CLM CAMERA OUTPUT CONNECTOR 1 56

FIGURE 1.5B – CLM CAMERA OUTPUT CONNECTOR 2 57

FIGURE 1.5C – CLB CAMERA POWER CONNECTOR 59

FIGURE 1.5D – CLM CAMERA SERIAL/LENS CONTROL PIN-OUTS 60

FIGURE 1.6 – GEV CAMERA BACK PANEL – GIGE OUTPUT 62

FIGURE 1.6A – GEV CAMERA POWER CONNECTOR PIN-OUTS 63

FIGURE 1.6B – GEV CAMERA SERIAL/LENS CONTROL PIN-OUTS 64

FIGURE 1.7 – CXP CAMERA BACK PANEL – COAXPRESS OUTPUT 65

FIGURE 1.7A – CXP CAMERA POWER CONNECTOR PIN-OUTS 66

FIGURE 1.7B – CXP CAMERA SERIAL/LENS CONTROL PIN-OUTS 67

FIGURE 1.9A – C-MOUNT CAMERA LINK OUTPUT – DIMENSIONAL DRAWINGS FOR CLB-B0610, B0620, B1310, B1410, B1411, B1610, B2510, AND B2520. 71

FIGURE 1.9B – C-MOUNT CAMERA LINK OUTPUT – DIMENSIONAL DRAWINGS FOR CLB-B1620, AND CLB-1920. 72

FIGURE 1.9C – C-MOUNT CAMERA LINK OUTPUT – DIMENSIONAL DRAWINGS FOR CLB-B1020, B1320, B1621, B1921, B1923, AND B2320. 73

FIGURE 1.9D – C-MOUNT CAMERA LINK OUTPUT – DIMENSIONAL DRAWINGS FOR CLB-B1922, B2720, B3420. 74

FIGURE 1.9E – F-MOUNT CAMERA LINK OUTPUT – DIMENSIONAL DRAWINGS FOR CLB-B2020, B4020, B4820. 75

FIGURE 1.9F – F-MOUNT CAMERA LINK OUTPUT – DIMENSIONAL DRAWINGS FOR CLB-B4821, AND CLB-B4822. 76

FIGURE 1.9G – F-MOUNT CAMERA LINK OUTPUT – DIMENSIONAL DRAWINGS FOR CLB-B2021, CLB-B3320, AND CLB-B6620. 77

FIGURE 1.9H – F-MOUNT CAMERA LINK OUTPUT – DIMENSIONAL DRAWINGS FOR CLM-B1040, B1340, B1641, B1941, B1943, AND B2340. 78

FIGURE 1.9I – C-MOUNT CAMERA LINK OUTPUT – DIMENSIONAL DRAWINGS FOR CLM-B1942, CLM-B2740, CLM-B3440. 79

FIGURE 1.9J – F-MOUNT CAMERA LINK OUTPUT – DIMENSIONAL DRAWINGS FOR CLM-B4841, AND CLM-B4842 80

FIGURE 1.9K – F-MOUNT CAMERA LINK OUTPUT – DIMENSIONAL DRAWINGS FOR CLM-B2041, CLM-B3340, CLM-B6640 81

FIGURE 1.9L – F-MOUNT CAMERA LINK OUTPUT – WITH EXTERNAL HEATSINK DIMENSIONAL DRAWINGS FOR 82

FIGURE 1.10A – C-MOUNT GIGE VISION OUTPUT – DIMENSIONAL DRAWINGS FOR GEV-B0610, B0620, B1410, B1610, B2510, AND B2520. 83

FIGURE 1.10B – C-MOUNT GIGE VISION OUTPUT – DIMENSIONAL DRAWINGS FOR GEV-B1620, AND GEV-B1920. 84

FIGURE 1.10C – C-MOUNT GIGE VISION OUTPUT – DIMENSIONAL DRAWINGS FOR GEV-B1020, B1320, B1621, B1921, B1923, AND B2320. 85

FIGURE 1.10D – C-MOUNT GIGE VISION OUTPUT – DIMENSIONAL DRAWINGS FOR GEV-B1922, GEV-B2720, AND GEV-B3420. 86

FIGURE 1.10E – F-MOUNT GIGE VISION OUTPUT – DIMENSIONAL DRAWINGS FOR GEV-B2020, GEV- B4020, AND GEV-B4820. 87

FIGURE 1.10F – F-MOUNT GIGE VISION OUTPUT – DIMENSIONAL DRAWINGS FOR GEV-B4821, AND GEV-B4822. 88

FIGURE 1.10G – F-MOUNT GIGE VISION OUTPUT – DIMENSIONAL DRAWINGS FOR GEV-B2021, GEV-B3320, AND B6620. 89

FIGURE 1.11A – C-MOUNT POE GIGE VISION OUTPUT – DIMENSIONAL DRAWINGS FOR POE-B0610, B0620, B1410, B1610, B2510, AND B2520. 90

FIGURE 1.11B – C-MOUNT POE GIGE VISION OUTPUT – DIMENSIONAL DRAWINGS FOR POE-B1620, AND POE-B1920. 91

FIGURE 1.11C – C-MOUNT POE GIGE VISION OUTPUT – DIMENSIONAL DRAWINGS FOR POE-B1020, B1320, B1621, B1921, B1923, AND B2320. 92

FIGURE 1.11D – C-MOUNT POE GIGE VISION OUTPUT – DIMENSIONAL DRAWINGS FOR POE-B1922, GEV-B2720, AND GEV-B3420. 93

FIGURE 1.11E – F-MOUNT POE GIGE VISION OUTPUT – DIMENSIONAL DRAWINGS FOR POE-B2020, POE-B4020, AND POE-B4820. 94

FIGURE 1.11F – F-MOUNT POE GIGE VISION OUTPUT – DIMENSIONAL DRAWINGS FOR POE-B4821, AND POE-B4822. 95

FIGURE 1.11G – F-MOUNT POE GIGE VISION OUTPUT – DIMENSIONAL DRAWINGS FOR POE-B2021, POE-B3320, AND POE-B6620. 96

FIGURE 1.12A – C-MOUNT COAXEXPRESS OUTPUT – DIMENSIONAL DRAWINGS FOR CXP-B0610, B0620, B1410, B1610, B2510, AND B2520. 97

FIGURE 1.12B – C-MOUNT COAXEXPRESS OUTPUT – DIMENSIONAL DRAWINGS FOR CXP-B1620, AND CXP-B1920. 98

FIGURE 1.12C – C-MOUNT COAXEXPRESS OUTPUT – DIMENSIONAL DRAWINGS FOR CXP-B1020, B1320, B1621, B1921, B1923, AND B2320. 99

FIGURE 1.12D – C-MOUNT COAXEXPRESS OUTPUT – DIMENSIONAL DRAWINGS FOR CXP-B1922, CXP-B2720, AND CXP-B3420. 100

FIGURE 1.12E – F-MOUNT COAXEXPRESS OUTPUT – DIMENSIONAL DRAWINGS FOR CXP-B2020, CXP-B4020, CXP-B4820. 101

FIGURE 1.12F – F-MOUNT CAMERA LINK OUTPUT – DIMENSIONAL DRAWINGS FOR CXP-B4821, AND CXP-B4822. 102

FIGURE 1.12G – F-MOUNT COAXEXPRESS OUTPUT – DIMENSIONAL DRAWINGS FOR CXP-B2021, CXP-B3320, AND CXP-B6620. 103

FIGURE 1.13A – SMALL BOBCAT MOUNTING PLATE USING ¼ IN 20 THREAD. 104

FIGURE 1.13B – BIG BOBCAT MOUNTING PLATE USING ¼ IN 20 THREAD. 104

FIGURE 2.1 – SINGLE OUTPUT MODE OF OPERATION. 106

FIGURE 2.2 – DUAL OUTPUT MODE OF OPERATION. 107

FIGURE 2.3 – QUAD OUTPUT OPERATION. 108

FIGURE 2.4A – CENTER COLUMNS OUTPUT MODE OF OPERATION. 110

FIGURE 2.4B – CENTER COLUMNS OUTPUT IN DUAL MODE OF OPERATION. 110

FIGURE 2.5 – CENTER COLUMNS OUTPUT IN DUAL TAP MODE. 111

FIGURE 2.6 – SUB-SAMPLED CCD OUTPUT. 111

FIGURE 2.7 – HORIZONTAL AND VERTICAL WINDOW POSITIONING. 116

FIGURE 2.8 – SLAVE AOIS. 117

FIGURE 2.9 – PAOI ENABLED AS PROCESSING ROI. 117

FIGURE 2.10.1A – FRAME RATE VS. VERTICAL WINDOW SIZE FOR B0610 119

FIGURE 2.10.1B – FRAME RATE VS. VERTICAL WINDOW SIZE FOR B0620 120

FIGURE 2.10.1C – FRAME RATE VS. VERTICAL WINDOW SIZE FOR B1020 121

FIGURE 2.10.1D – FRAME RATE VS. VERTICAL WINDOW SIZE FOR B1040 122

FIGURE 2.10.1E – FRAME RATE VS. VERTICAL WINDOW SIZE FOR B1310 123

FIGURE 2.10.1F – FRAME RATE VS. VERTICAL WINDOW SIZE FOR B1320 124

FIGURE 2.10.1G – FRAME RATE VS. VERTICAL WINDOW SIZE FOR B1340 125

FIGURE 2.10.1H – FRAME RATE VS. VERTICAL WINDOW SIZE FOR B1410 126

FIGURE 2.10.1I – FRAME RATE VS. VERTICAL WINDOW SIZE FOR B1411 127

FIGURE 2.10.1J – FRAME RATE VS. VERTICAL WINDOW SIZE FOR B1610 128

FIGURE 2.10.1K – FRAME RATE VS. VERTICAL WINDOW SIZE FOR B1620 129

FIGURE 2.10.1L – FRAME RATE VS. VERTICAL WINDOW SIZE FOR B1621 130

FIGURE 2.10.1M – FRAME RATE VS. VERTICAL WINDOW SIZE FOR B1641 131

FIGURE 2.10.1N – FRAME RATE VS. VERTICAL WINDOW SIZE FOR B1920 132

FIGURE 2.10.1O – FRAME RATE VS. VERTICAL WINDOW SIZE FOR B1921 133

FIGURE 2.10.1P – FRAME RATE VS. VERTICAL WINDOW SIZE FOR B1941 134

FIGURE 2.10.1Q – FRAME RATE VS. VERTICAL WINDOW SIZE FOR B1922 135

FIGURE 2.10.1S – FRAME RATE VS. VERTICAL WINDOW SIZE FOR B1923 137

FIGURE 2.10.1U – FRAME RATE VS. VERTICAL WINDOW SIZE FOR B2020 139

FIGURE 2.10.1X– FRAME RATE VS. VERTICAL WINDOW SIZE FOR B2320 142

FIGURE 2.10.1ZA – FRAME RATE VS. VERTICAL WINDOW SIZE FOR B2510 144

FIGURE 2.10.1ZB – FRAME RATE VS. VERTICAL WINDOW SIZE FOR B2520 145

FIGURE 2.10.1ZE – FRAME RATE VS. VERTICAL WINDOW SIZE FOR B3320 148

FIGURE 2.10.1ZF – FRAME RATE VS. VERTICAL WINDOW SIZE FOR B3340 149

FIGURE 2.10.1ZI – FRAME RATE VS. VERTICAL WINDOW SIZE FOR B4020. 152

FIGURE 2.10.1ZJ – FRAME RATE VS. VERTICAL WINDOW SIZE FOR B4820. 153

FIGURE 2.10.1ZK – FRAME RATE VS. VERTICAL WINDOW SIZE FOR B4821 154

FIGURE 2.10.1ZO – FRAME RATE VS. VERTICAL WINDOW SIZE FOR B6620. 158

FIGURE 2.10.1ZP – FRAME RATE VS. VERTICAL WINDOW SIZE FOR B6640. 159

FIGURE 2.11 – 2:2 HORIZONTAL AND VERTICAL BINNING 160

FIGURE 2.11A – AOI WITHIN HORIZONTAL AND VERTICAL BINNED IMAGE. 164

FIGURE 2.12 – ELECTRONIC SHUTTER POSITION 165

FIGURE 2.13 – PROGRAMMABLE FRAME TIME 166

FIGURE 2.14 – STANDARD TRIGGERING TIMING 170

FIGURE 2.15 – FAST SYNCHRONIZED TRIGGERING - RAPID CAPTURE 171

FIGURE 2.16 – DOUBLE EXPOSURE TRIGGERING 172

FIGURE 2.17 – FRAME ACCUMULATION TRIGGERING 173

FIGURE 2.18 – ASYNCHRONOUS TRIGGERING 173

FIGURE 2.19 – STROBE PULSE POSITIONING 174

FIGURE 2.20 – AFE GAIN AND OFFSET 175

FIGURE 2.21 – DATA OUTPUT FORMAT 177

FIGURE 2.22 – OUTPUT DATA USING 4 BITS DIGITAL RIGHT SHIFT 178

FIGURE 2.24A – 2 TAP SEQUENTIAL OUTPUT 179

FIGURE 2.24B – 2 TAP INTERLEAVED OUTPUT 180

FIGURE 2.24C – 2 TAP INTERLEAVED OUTPUT 180

FIGURE 2.24D – 4 TAP INTERLEAVED OUTPUT 181

FIGURE 2.25 – INTERNAL PULSE GENERATOR 182

FIGURE 2.26 – IN1, IN2 ELECTRICAL CONNECTION. 184

FIGURE 2.27 – OUT1, OUT2 ELECTRICAL CONNECTION. 184

FIGURE 2.30 – LOOK UP TABLE 190

FIGURE 2.31 – GAMMA CORRECTED VIDEO SIGNAL 191

FIGURE 2.32 – CUSTOM LUT 191

FIGURE 2.33A – ORIGINAL IMAGE SHOWING 'SHADING' EFFECT 195

FIGURE 2.33B – FLAT FIELD CORRECTED IMAGE 195

FIGURE 2.34 – NORMAL AND NEGATIVE IMAGE 196

FIGURE 3.1 – ORIGINAL AND PROCESSED IMAGE WITH SINGLE THRESHOLD. 201

FIGURE 3.2 – ORIGINAL AND PROCESSED IMAGE WITH DOUBLE THRESHOLD.201

FIGURE 3.3 – ORIGINAL AND PROCESSED IMAGE WITH THRESHOLD AND GRAY SCALE STRETCH. 202

FIGURE 3.4 – SINGLE POINT TF CORRECTION. 203

FIGURE 3.5 – MULTI POINT TF CORRECTION. 204

FIGURE 3.6 – MULTI POINT IMAGE CORRECTION (A – ORIGINAL, B – PROCESSED). 204

FIGURE 4.1 – SERIAL PROTOCOL FORMAT 208

FIGURE 4.2 – NORMAL WRITE CYCLE 209

FIGURE 4.3A – INVALID COMMAND ERROR 209

FIGURE 4.3B – RX TIMEOUT ERROR 209

FIGURE 4.4 – NORMAL READ CYCLE 210

FIGURE 5.1 – DISCOVERY PROCEDURE – SELECT PORT 254

FIGURE 5.2 – CAMCONFIG GUI ADVANCED 255

FIGURE 5.2A – CAMCONFIG GUI BASIC 256

FIGURE 5.3 – MAIN MENU 257

FIGURE 5.5 – COMMAND TERMINAL 259

FIGURE 5.6 – DOWNLOAD TERMINAL 260

FIGURE 5.7 – VIEW GUI WINDOWS 261

FIGURE 5.8 – HELP MENU 262

FIGURE 5.9 – ABOUT CAMCONFIG. 263

FIGURE 5.10 – VIDEO AMP PARAMETER WINDOW 263

FIGURE 5.11 – I/O CONTROL PARAMETER WINDOW 265

FIGURE 5.13 – PULSE GENERATOR WINDOW 268

FIGURE 5.16 – AOI WINDOW. 274

FIGURE 5.17 – STROBE CONTROL WINDOW 275

FIGURE 5.18 – COLOR WINDOW 277

FIGURE 5.20 – DATA OUTPUT WINDOW 280

FIGURE 5.21 – LENS CONTROL WINDOW 282

TABLES AND CAPTIONS

TABLE 1.0 – PIXEL STRUCTURE FOR DIFFERENT BOBCAT CAMERAS 28

TABLE 1.1A – B0610, B0620 CAMERA SPECIFICATIONS. 34

TABLE 1.1B – B1020, B1310 AND B1320 CAMERA SPECIFICATIONS 35

TABLE 1.1C – B1410, B1411, AND B1610 CAMERA SPECIFICATIONS 36

TABLE 1.1D – B1620, B1621 AND B1920 CAMERA SPECIFICATIONS 37

TABLE 1.1E – B1921, B1922, AND B1923 CAMERA SPECIFICATIONS 38

TABLE 1.1F – B2020, B2021 AND B2320 CAMERA SPECIFICATIONS 39

TABLE 1.1G – B3320, B3420 AND B4020 CAMERA SPECIFICATIONS 41

TABLE 1.1H – B4820, B4821 AND B4822 CAMERA SPECIFICATIONS 42

TABLE 1.1I – B6620 CAMERA SPECIFICATIONS 43

TABLE 1.1J – B1040, B1340, AND B1641 CAMERA SPECIFICATIONS 44

TABLE 1.1K – B1941, B1942, B1943 CAMERA SPECIFICATIONS 45

TABLE 1.1L – B2041, B2340, AND B2740 CAMERA SPECIFICATIONS 46

TABLE 1.1M– B3340, B3440, AND B4841 CAMERA SPECIFICATIONS 47

TABLE 1.1N – B4842, B6640 CAMERA SPECIFICATIONS 48

TABLE 1.4A – CLB CAMERA OUTPUT CONNECTOR – SIGNAL MAPPING 50

TABLE 1.4B – BASE CAMERA LINK BIT ASSIGNMENT 51

TABLE 1.4C – CLB CAMERA POWER CONNECTOR PIN MAPPING 52

TABLE 1.4D – CLB BNC CONNECTORS PIN MAPPING 53

TABLE 1.5A – CLM BASE CAMERA OUTPUT CONNECTOR 1 – SIGNAL MAPPING 56

TABLE 1.5B – CLM MEDIUM CAMERA OUTPUT CONNECTOR 2 – SIGNAL MAPPING 57

TABLE 1.5C – MEDIUM CAMERA LINK BIT ASSIGNMENT 59

TABLE 1.6A – GEV CAMERA POWER CONNECTOR PIN MAPPING 63

TABLE 1.6B – GEV BNC CONNECTORS PIN MAPPING 63

TABLE 1.7A – CXP CAMERA POWER CONNECTOR PIN MAPPING 66

TABLE 1.7B – CXP BNC PIG-TALE CONNECTOR PIN MAPPING 66

TABLE 2.1 – IMAGE RESOLUTIONS FOR DIFFERENT MODES 112

TABLE 2.2 – FRAME RATES FOR DIFFERENT MODES 114

TABLE 2.3 – FRAME RATES FOR QUAD OUTPUT CAMERAS 114

TABLE 2.4A – IMAGE SIZES AND FRAME RATES FOR DIFFERENT H BINNING MODES 161

TABLE 2.4B – IMAGE SIZES AND FRAME RATES FOR DIFFERENT V BINNING MODES 162

TABLE 2.4C – B0620 CENTER MODE IMAGE SIZES AND FRAME RATES DURING V BINNING 162

TABLE 2.4A – BOBCAT INPUT MAPPING 183

TABLE 2.4B – BOBCAT OUTPUT MAPPING 184

TABLE 3.1 – CURRENT CAMERA TEMPERATURE VALUES 219

TABLE 4.0 – AUTO IRIS 4 PIN MINI PLUG E4-191J 329

Made in USA



Introduction

Key features of the BOBCAT camera

BOBCAT FAMILY

The BOBCAT series of cameras are built around a robust imaging platform utilizing the latest digital technology and components. BOBCAT camera series is designed around 26 different CCD imaging sensors, featuring different resolutions and frame rates. Each base model is available in monochrome and color. Each base model is also available with Base/Medium Camera Link PoCL, GEV, CXP. The first three letters in the camera model name shows the output interface – CLB and CLM for Base/Medium Camera Link, GEV/PoE for GigE Vision, and CXP for CoaXPress.

The BOBCAT family list is shown below:

Model	Resolution (H x V)	Speed	Type	Optics	CCD	CCD model	Supported Outputs
B0610M	648/640 x 488/480	109/136 fps	Mono	1/3"	TRUESE	KAI-0340SM	CLB/GEV/PoE/CXP
B0610C	648/640 x 488/480	109/136 fps	Color	1/3"	TRUESE	KAI-0340SC	CLB/GEV/PoE/CXP
B0620M	648/640 x 488/480	207/259 fps	Mono	1/3"	TRUESE	KAI-0340DM	CLB/GEV/PoE/CXP
B0620C	648/640 x 488/480	207/259 fps	Color	1/3"	TRUESE	KAI-0340DC	CLB/GEV/PoE/CXP
B1020M	1032/1024 x 1032/1024	59/74 fps	Mono	1/2‴	TRUESE	KAI-01050M	CLB/GEV/PoE/CXP
B1020C	1032/1024 x 1032/1024	59/74 fps	Color	1/2‴	TRUESE	KAI-01050C	CLB/GEV/PoE/CXP
B1040M	1032/1024 x 1032/1024	118/148 fps	Mono	1/2‴	TRUESE	KAI-01050M	CLM/CXP
B1040C	1032/1024 x 1032/1024	118/148 fps	Color	1/2‴	TRUESE	KAI-01050C	CLM/CXP
B1310M	1296/1280 x 966/960	26/39 fps	Mono	1/3″	Sony	ICX-445AL	CLB/GEV/PoE/CXP
B1310C	1296/1280 x 966/960	26/39 fps	Color	1/3″	Sony	ICX-445AQ	CLB/GEV/PoE/CXP
B1320M	1312/1280 x 728/720	68/85 fps	Mono	1/2‴	TRUESE	KAI-01150M	CLB/GEV/PoE/CXP
B1320C	1312/1280 x 728/720	68/85 fps	Color	1/2‴	TRUESE	KAI-01150C	CLB/GEV/PoE/CXP
B1320T	1312/1280 x 728/720	68/85 fps	TrueS	1/2‴	TRUESE	KAI-01150T	CLB/GEV/PoE/CXP
B1340M	1312/1280 x 728/720	135/169 fps	Mono	1/2‴	TRUESE	KAI-01150M	CLM/CXP
B1340C	1312/1280 x 728/720	135/169 fps	Color	1/2‴	TRUESE	KAI-01150C	CLM/CXP
B1340T	1312/1280 x 728/720	135/169 fps	TrueS	1/2‴	TRUESE	KAI-01150T	CLM/CXP
B1410M	1392/1360 x 1040/1024	23/30 fps	Mono	2/3"	Sony	ICX-285AL	CLB/GEV/PoE/CXP
B1410C	1392/1360 x 1040/1024	23/30 fps	Color	2/3"	Sony	ICX-285AQ	CLB/GEV/PoE/CXP
B1411M	1392/1360 x 1040/1024	24/31 fps	Mono	1/2‴	Sony	ICX-267AL	CLB/GEV/PoE/CXP
B1411C	1392/1360 x 1040/1024	24/31 fps	Color	1/2‴	Sony	ICX-267AK	CLB/GEV/PoE/CXP
B1610M	1628/1620 x 1236/1220	17/25 fps	Mono	1/1.8"	Sony	ICX-274ALM	CLB/GEV/PoE/CXP
B1610C	1628/1620 x 1236/1220	17/25 fps	Color	1/1.8"	Sony	ICX-274AQC	CLB/GEV/PoE/CXP
B1620M	1608/1600 x 1208/1200	35/44 fps	Mono	1.0"	TRUESE	KAI-2020M	CLB/GEV/PoE/CXP
B1620C	1608/1600 x 1208/1200	35/44 fps	Color	1.0"	TRUESE	KAI-2020C	CLB/GEV/PoE/CXP
B1621M	1632/1600 x 1232/1200	34/42 fps	Mono	2/3″	TRUESE	KAI-02050M	CLB/GEV/PoE/CXP
B1621C	1632/1600 x 1232/1200	34/42fps	Color	2/3″	TRUESE	KAI-02050C	CLB/GEV/PoE/CXP
B1641M	1632/1600 x 1232/1200	67/83 fps	Mono	2/3″	TRUESE	KAI-02050M	CLM/CXP
B1641C	1632/1600 x 1232/1200	67/83 fps	Color	2/3″	TRUESE	KAI-02050C	CLM/CXP
B1920M	1928/1920 x 1084/1080	33/41 fps	Mono	1.0"	TRUESE	KAI-2093M	CLB/GEV/PoE/CXP
B1920C	1928/1920 x 1084/1080	33/41 fps	Color	1.0"	TRUESE	KAI-2093C	CLB/GEV/PoE/CXP
B1921M	1952/1920 x 1112/1080	32/39 fps	Mono	2/3″	TRUESE	KAI-02150M	CLB/GEV/PoE/CXP
B1921C	1952/1920 x 1112/1080	32/39 fps	Color	2/3″	TRUESE	KAI-02150C	CLB/GEV/PoE/CXP
B1921T	1952/1920 x 1112/1080	32/39 fps	TrueS	2/3″	TRUESE	KAI-02150T	CLB/GEV/PoE/CXP

Model	Resolution (H x V)	Speed	Type	Optics	CCD	CCD model	Supported Outputs
B1922M	1940/1932 x 1460/1452	20/25 fps	Mono	2/3″	Sony	ICX-674AL	CLB/GEV/PoE/CXP
B1922C	1940/1932 x 1460/1452	20/25 fps	Color	2/3″	Sony	ICX-674AQ	CLB/GEV/PoE/CXP
B1923M	1928/1920 x 1088/1080	30/37 fps	Mono	1″	TRUESE	KAI-2170M	CLB/GEV/PoE/CXP
B1923C	1928/1920 x 1088/1080	30/37 fps	Color	1″	TRUESE	KAI-2170C	CLB/GEV/PoE/CXP
B1923T	1928/1920 x 1088/1080	30/37 fps	TrueS	1″	TRUESE	KAI-2170T	CLB/GEV/PoE/CXP
B1941M	1952/1920 x 1112/1080	62/79 fps	Mono	2/3″	TRUESE	KAI-02150M	CLM/CXP
B1941C	1952/1920 x 1112/1080	62/79 fps	Color	2/3″	TRUESE	KAI-02150C	CLM/CXP
B1941T	1952/1920 x 1112/1080	62/79 fps	TrueS	2/3″	TRUESE	KAI-02150T	CLM/CXP
B1942M	1940 x1460	40/54 fps	Mono	2/3″	Sony	ICX-674AL	CLM/CXP
B1942C	1940 x 1460	40/54fps	Color	2/3″	Sony	ICX-674AQ	CLM/CXP
B1943M	1928 x 1088	60/75	Mono	1″	TRUESE	KAI-02170M	CLM/CXP
B1943C	1928 x 1088	60/75	Color	1″	TRUESE	KAI-02170C	CLM/CXP
B1943T	1928 x 1088	60/75	TrueS	1″	TRUESE	KAI-02170T	CLM/CXP
B2020M	2056/2048 x 2060/2048	16/20 fps	Mono	1.3"	TRUESE	KAI-04022M	CLB/GEV/PoE/CXP
B2020C	2056/2048 x 2060/2048	16/20 fps	Color	1.3"	TRUESE	KAI-04022C	CLB/GEV/PoE/CXP
B2021M	2072/2048 x 2072/2048	13/17 fps	Mono	1.3"	TRUESE	KAI-04070M	CLB/GEV/PoE/CXP
B2021C	2072/2048 x 2072/2048	13/17 fps	Color	1.3"	TRUESE	KAI-04070C	CLB/GEV/PoE/CXP
B2021T	2072/2048 x 2072/2048	13/17 fps	TrueS	1.3"	TRUESE	KAI-04070T	CLB/GEV/PoE/CXP
B2041M	2072/2048 x 2072/2048	26/34 fps	Mono	1.3"	TRUESE	KAI-04070M	CLM/CXP
B2041C	2072/2048 x 2072/2048	26/34 fps	Color	1.3"	TRUESE	KAI-04070C	CLM/CXP
B2041T	2072/2048 x 2072/2048	26/34 fps	TrueS	1.3"	TRUESE	KAI-04070T	CLM/CXP
B2320M	2352/2336 x 1768/1752	16/21 fps	Mono	1″	TRUESE	KAI-04050M	CLB/GEV/PoE/CXP
B2320C	2352/2336 x 1768/1752	16/21 fps	Color	1″	TRUESE	KAI-04050C	CLB/GEV/PoE/CXP
B2320T	2352/2336 x 1768/1752	16/21 fps	TrueS	1″	TRUESE	KAI-04050T	CLB/GEV/PoE/CXP
B2340M	2352/2336 x 1768/1752	33/41 fps	Mono	1″	TRUESE	KAI-04050M	CLM/CXP
B2340C	2352/2336 x 1768/1752	33/41 fps	Color	1″	TRUESE	KAI-04050C	CLM/CXP
B2340T	2352/2336 x 1768/1752	33/41 fps	TrueS	1″	TRUESE	KAI-04050T	CLM/CXP
B2510M	2456/2448 x 2058/2050	6.5/9.6 fps	Mono	2/3"	Sony	ICX-655AL	CLB/GEV/PoE/CXP
B2510C	2456/2448 x 2058/2050	6.5/9.6 fps	Color	2/3"	Sony	ICX-655AQ	CLB/GEV/PoE/CXP
B2520M	2456/2448 x 2058/2050	11/16 fps	Mono	2/3"	Sony	ICX-625AL	CLB/GEV/PoE/CXP
B2520C	2456/2448 x 2058/2050	11/16 fps	Color	2/3"	Sony	ICX-625AQ	CLB/GEV/PoE/CXP
B2720M	2756/2748 x 2208/2200	10.2/12.7 fps	Mono	1.0"	Sony	ICX-694AL	CLB/GEV/PoE/CXP
B2720C	2756/2748 x 2208/2200	10.2/12.7 fps	Color	1.0"	Sony	ICX-694AQ	CLB/GEV/PoE/CXP
B2740M	2756/2748 x 2208/2200	20/25	Mono	1.0"	Sony	ICX-694AL	CLM/CXP
B2740C	2756/2748 x 2208/2200	20/25	Color	1.0"	Sony	ICX-694AQ	CLM/CXP
B3320M	3312/3296 x 2488/2472	8.5/10.6 fps	Mono	4/3″	TRUESE	KAI-08050M	CLB/GEV/PoE/CXP
B3320C	3312/3296 x 2488/2472	8.5/10.7 fps	Color	4/3″	TRUESE	KAI-08050C	CLB/GEV/PoE/CXP
B3320T	3312/3296 x 2488/2472	8.5/10.7 fps	TrueS	4/3″	TRUESE	KAI-08050T	CLB/GEV/PoE/CXP
B3340M	3312/3296 x 2488/2472	17/21	Mono	4/3″	TRUESE	KAI-08050M	CLM/CXP
B3340C	3312/3296 x 2488/2472	17/21	Color	4/3″	TRUESE	KAI-08050C	CLM/CXP
B3340T	3312/3296 x 2488/2472	17/21	TrueS	4/3″	TRUESE	KAI-08050T	CLM/CXP
B3420M	3312/3380 x 2712/2704	6.9/8.6	Mono	1.0″	Sony	ICX-814AL	CLB/GEV/PoE/CXP
B3420C	3312/3380 x 2712/2704	6.9/8.6	Color	1.0″	Sony	ICX-814AQ	CLB/GEV/PoE/CXP
B3440M	3312/3296 x 2712/2472	14/17	Mono	1.0″	Sony	ICX-814AL	CLM/CXP
B3440C	3312/3296 x 2712/2472	14/17	Color	1.0″	Sony	ICX-814AQ	CLM/CXP
B4020M	4032/4008 x 2688/2672	4.8/6.4 fps	Mono	43.3 mm	TRUESE	KAI-11002M	CLB/GEV/PoE/CXP

Model	Resolution (H x V)	Speed	Type	Optics	CCD	CCD model	Supported Outputs
B4020C	4032/4008 x 2688/2672	4.8/6.4 fps	Color	43.3 mm	TRUESE	KAI-11002C	CLB/GEV/PoE/CXP
B4820M	4904/4872 x 3280/3248	3.2/4.2fps	Mono	43.3 mm	TRUESE	KAI-16000M	CLB/GEV/PoE/CXP
B4820C	4904/4872 x 3280/3248	3.2/4.2 fps	Color	43.3 mm	TRUESE	KAI-16000C	CLB/GEV/PoE/CXP
B4821M	4920/4896 x 3280/3264	3.1/4.2 fps	Mono	32.36 mm	TRUESE	KAI-16050M	CLB/GEV/PoE/CXP
B4821C	4920/4896 x 3280/3264	3.1/4.2 fps	Color	32.36 mm	TRUESE	KAI-16050C	CLB/GEV/PoE/CXP
B4821T	4920/4896 x 3280/3264	3.1/4.2 fps	TrueS	32.36 mm	TRUESE	KAI-16050T	CLB/GEV/PoE/CXP
B4841M	4920/4896 x 3280/3264	6.6/8.8 fps	Mono	32.36 mm	TRUESE	KAI-16050M	CLM/CXP
B4841C	4920/4896 x 3280/3264	6.6/8.8 fps	Color	32.36 mm	TRUESE	KAI-16050C	CLM/CXP
B4841T	4920/4896 x 3280/3264	6.6/8.8 fps	TrueS	32.36 mm	TRUESE	KAI-16050T	CLM/CXP
B4822M	4880/4864 x 3256/3232	3.0/4.1 fps	Mono	43.20 mm	TRUESE	KAI-16070M	CLB/GEV/PoE/CXP
B4822C	4880/4864 x 3256/3232	3.0/4.1 fps	Color	43.20 mm	TRUESE	KAI-16070C	CLB/GEV/PoE/CXP
B4822T	4880/4864 x 3256/3232	3.0/4.1 fps	TrueS	43.20 mm	TRUESE	KAI-16070T	CLB/GEV/PoE/CXP
B4842M	4880 x 3256	5.9/7.9 fps	Mono	43.20 mm	TRUESE	KAI-16070M	CLM/CXP
B4842C	4880 x 3256	5.9/7.9 fps	Color	43.20 mm	TRUESE	KAI-16070C	CLM/CXP
B4842T	4880 x 3256	5.9/7.9 fps	TrueS	43.20 mm	TRUESE	KAI-16070T	CLM/CXP
B6620M	6600/6576 x 4400/4384	1.8/2.4 fps	Mono	43.3 mm	TRUESE	KAI-29050M	CLB/GEV/PoE/CXP
B6620C	6600/6576 x 4400/4384	1.8/2.4 fps	Color	43.3 mm	TRUESE	KAI-29050C	CLB/GEV/PoE/CXP
B6620T	6600/6576 x 4400/4384	1.8/2.4 fps	TrueS	43.3 mm	TRUESE	KAI-29050T	CLB/GEV/PoE/CXP
B6640M	6600/6576 x 4400/4384	3.5/4.7 fps	Mono	43.3 mm	TRUESE	KAI-29050M	CLM/CXP
B6640C	6600/6576 x 4400/4384	3.5/4.7 fps	Color	43.3 mm	TRUESE	KAI-29050C	CLM/CXP
B6640T	6600/6576 x 4400/4384	3.5/4.7 fps	TrueS	43.3 mm	TRUESE	KAI-29050T	CLM/CXP

NOTE:

1. Since the camera features and performance are output invariant, when describing the cameras, we will use only the model number without the first three letters.

2. B1920 supports only 1920 x 1080 image size.

1.1 GENERAL DESCRIPTION

The BOBCAT cameras are advanced, intelligent, high-resolution, progressive scan, fully programmable and field upgradeable CCD cameras. They are built around SONY's and TRUESENSE's line of interline transfer CCD imagers. BOBCAT cameras are feature rich with built in image processing engine (based on a 2 million gates FPGA), have small size, very low power consumption, low noise, and efficient and optimized internal thermal distribution. The BOBCAT cameras feature programmable image resolution, frame rates, gain, offset, asynchronous external triggering with programmable exposure, fast triggering, double exposure and capture duration, electronic shutter, long time integration, strobe output, transfer function correction, temperature monitoring and user programmable and up-loadable LUT. A square pixel provides for a superior image in any orientation. The interline transfer CCD permits full vertical and horizontal resolution of high-speed shutter images. The combination of electronic shutter and longtime integration enables the cameras capturing speed to be from 1/500,000 second to more than 16 seconds. A built-in Gamma correction and user LUT optimizes the CCD's dynamic range. The cameras have a standard GEV, Camera Link™, or CoaXPress interface that includes 8/10/12/14-bit data transmission with one, two, four output taps as well as camera control and asynchronous RS232 serial communication interface, all on a single cable. The cameras are fully programmable via the serial interface using a GUI based configuration utility. The adaptability and flexibility of the camera allows it to be used in a wide and diverse range of applications including machine vision, metrology high-definition imaging and surveillance, medical and scientific imaging, intelligent transportation systems, character recognition, document processing and many more and with a MTBF of > 660,000 hrs. It's the most feature packed versatile camera line produced.

MAIN BOBCAT FEATURES

- Mono and color - 8/10/12/14-bit data
- Color - 3x8-bit (RGB) data, auto white balance
- TRUESENSE color filter pattern from
- Normal and over-clock operation
- Base camera link, PoCL support or GigE Vision
- Rs232 serial communication
- Analog and digital gain and offset control
- 1x, 2x, 3x, 4x, 8x horizontal and vertical binning
- Eight (7 + 1) independent horizontal and vertical AOIs
- Programmable horizontal and vertical resolution
- Programmable line time, frame time and speed.
- Programmable external trigger:
  - 3 triggering sources
  - 5 triggering modes
- Automatic gain, exposure and iris control
- Internal/External exposure control
- Internal/External H and V sync input/output
- Left/right digital bit shift
- Test image with image superimposition
- Built in pulse generator
- Programmable I/O mapping
  - 4 programmable inputs
  - 3 programmable outputs
- Dynamic transfer function correction
- Dynamic black level correction
- Two-dimensional Flat field correction
- Defective and hot pixel correction
- Temperature monitor
- Field upgradeable firmware, LUT, DPC, HPC, FFT
- Integrated lens Control – Iris, Focus, Zoom

1.2 BOBCAT SPECIFICATIONS

1.2.1 General Information

A CCD camera is an electronic device for converting light into an electrical signal. The camera contains a light sensitive element CCD (Charge Coupled Device) where an electronic representation of the image is formed. The CCD consists of a two-dimensional array of sensitive elements – silicon photodiodes, also known as pixels. The photons falling on the CCD surface create photoelectrons within the pixels, where the number of photoelectrons is linearly proportional to the light level. Although the number of electrons collected in each pixel is linearly proportional to the light level and exposure time, the number of electrons varies with the wavelength of the incident light. When the desired exposure is reached, the charges from each pixel are shifted onto a vertical register, VCCD, and then one row downwards in a vertical direction towards a horizontal register, HCCD. After that the electrons contained in the HCCD are shifted in a horizontal direction, one pixel at a time, onto a floating diffusion output node where the transformation from charge to voltage takes place. The resultant voltage signal is buffered by a video amplifier and sent to the corresponding video output. There are two floating diffusions and two video amplifiers at each end of the HCCD, and the charges can be transferred towards any of the outputs (depending on the mode of operation). The time interval required for all the pixels, from the entire imager, to be clocked out of the HCCD is called a frame. To generate a color image a set of color filters (Red, Green, and Blue) arranged in a "Bayer" pattern, are placed over the pixels. The starting color is typically Green for TRUESENSE CCDs and Red for SONY CCDs, but it varies from CCD to CCD. Figure 1.0a shows the CCD pixel structure. Table 1.1 shows the individual pixel structure for different BOBCAT cameras. Effective pixels image consists of Active and Buffer pixels. Figures 1.1a, b, c and 1.2a, b show the camera's spectral response. Figure 1.3 shows the Bayer pattern arrangement.

A new innovation to the Bayer pattern is the TRUESENSE color filter pattern from. The TRUESENSE Color Filter pattern uses a technology which provides a 2x improvement in light sensitivity as compared to a standard color Bayer pattern. This technology utilizes panchromatic filters (filters that are sensitive to all colors of light) in addition to the standard green, red, blue filters. Figure 1.1d shows the typical spectral response of the TRUESENSE CCD. Figure 1.3a shows the TRUESENSE pattern arrangement. Figure 1.0b shows CCD pixel structure.

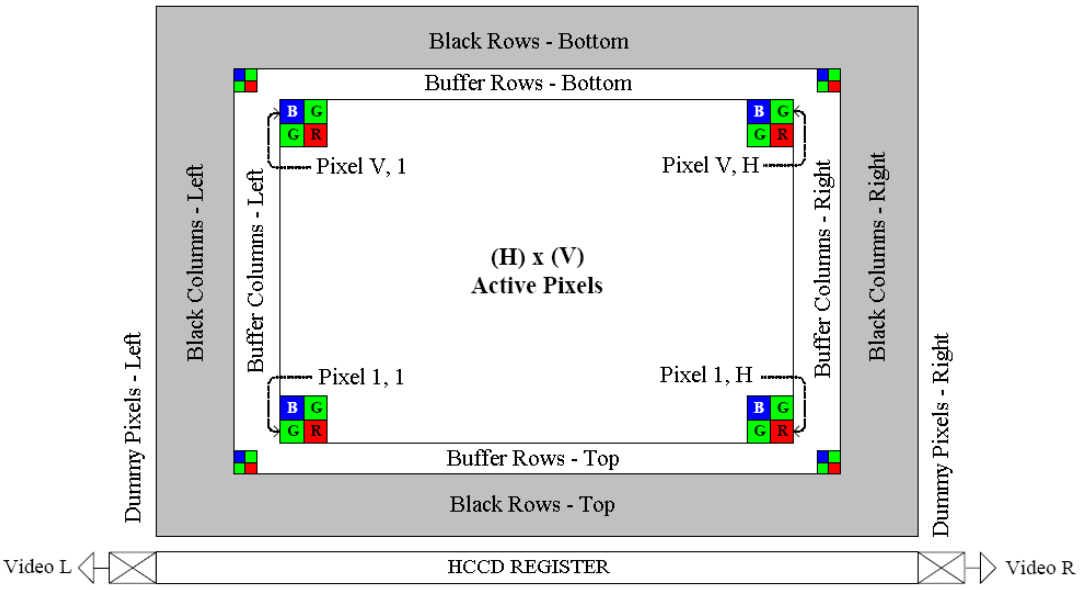

Figure 1.0a – Interline CCD pixel structure.

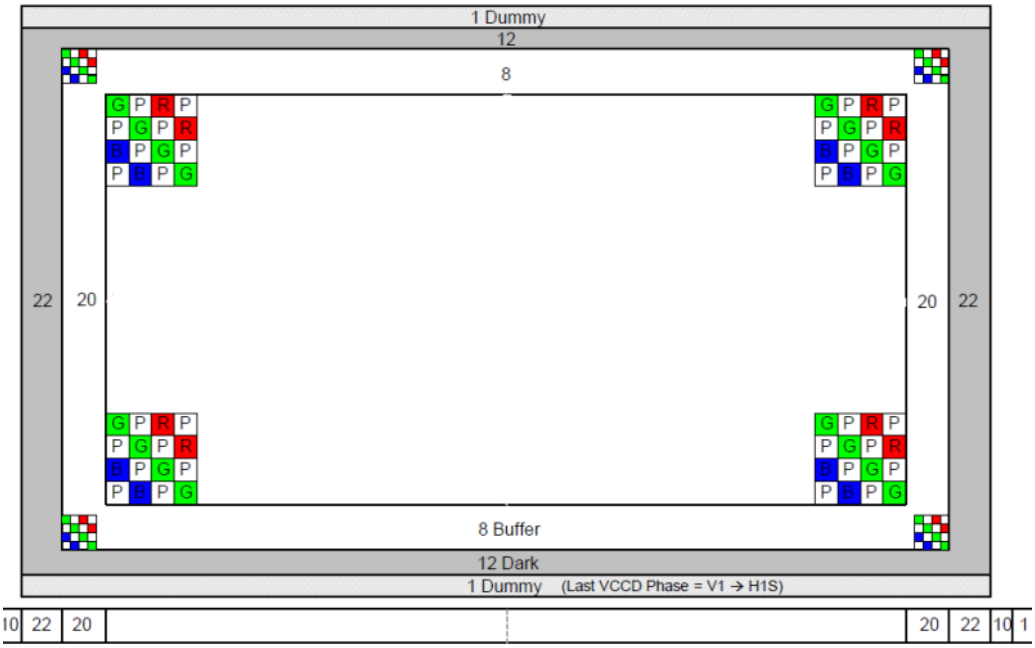

Figure 1.0b – TRUESENSE color filter interline CCD pixel structure.

Camera Type	Effective Pixels	Active Pixels	Effective Lines	Active Lines	CCD Sensor	Pixel Size
B0610	648	640	488	480	KAI-0340S	7.40 µm sq.
B0620	648	640	488	480	KAI-0340D	7.40 µm sq.
B1020	1032	1024	1032	1024	KAI-01050	5.50 µm sq.
B1040	1032	1024	1032	1024	KAI-01050	5.50 µm sq.
B1310	1296	1280	966	960	ICX-445	3.75 µm sq.
B1320	1320	1280	736	720	KAI-01150	5.50 µm sq.
B1340	1320	1280	736	720	KAI-01150	5.50 µm sq.
B1410	1392	1360	1040	1024	ICX-285	6.45 µm sq.
B1411	1392	1360	1040	1024	ICX-267	4.65 µm sq.
B1610	1628	1620	1236	1220	ICX-274	4.40 µm sq.
B1620	1608	1600	1208	1200	KAI-2020	7.40 µm sq.
B1621	1632	1600	1232	1200	KAI-2050	5.50 µm sq.
B1641	1632	1600	1232	1200	KAI-2050	5.50 µm sq.
B1920	1928	1920	1084	1080	KAI-2093	7.40 µm sq.
B1921	1952	1920	1112	1080	KAI-2150	5.50 µm sq.
B1922	1944	1932	1460	1452	ICX-674	4.54 µm sq.
B1923	1936	1920	1096	1080	KAI-2170	7.4 µm sq.
B1941	1960	1920	1120	1080	KAI-02150	5.5 µm sq.
B1942	1944	1932	1460	1452	ICX-674	4.54 µm sq.
B1943	1936	1920	1096	1080	KAI-2170	7.4 µm sq.
B2020	2056	2048	2060	2048	KAI-4022	7.40 µm sq.
B2021	2072	2048	2072	2048	KAI-4070	7.40 µm sq.
B2041	2072	2048	2072	2048	KAI-4070	7.40 µm sq.
B2320	2352	2336	1768	1752	KAI-04050	5.50 µm sq.
B2340	2352	2336	1768	1752	KAI-04050	5.50 µm sq.
B2510	2456	2448	2058	2050	ICX-655	3.45 µm sq.
B2520	2456	2448	2058	2050	ICX-625	3.45 µm sq.
B2720	2758	2750	2208	2200	ICX-694	4.54 µm sq.
B2740	2758	2750	2208	2200	ICX-694	4.54 µm sq.
B3320	3312	3296	2496	2472	KAI-08050	5.50 µm sq.
B3340	3312	3296	2496	2472	KAI-08050	5.50 µm sq.
B4020	4032	4008	2688	2672	KAI-11002	9.00 µm sq.
B4820	4904	4872	3280	3248	KAI-16000	7.40 µm sq.
B4821	4920	4896	3280	3264	KAI-16050	5.50 µm sq.
B4822	4880	4864	3256	3232	KAI-16070	7.4 µm sq.
B4841	4920	4896	3280	3264	KAI-16050	5.50 µm sq.
B4842	4880	4864	3256	3232	KAI-16070	7 µm sq.
B6620	6600	6576	4400	4384	KAI-29050	5.50 µm sq.
B6640	6600	6576	4400	4384	KAI-29050	5.50 µm sq.

Table 1.0 – Pixel structure for different BOBCAT cameras

1.2.2 Spectral Response

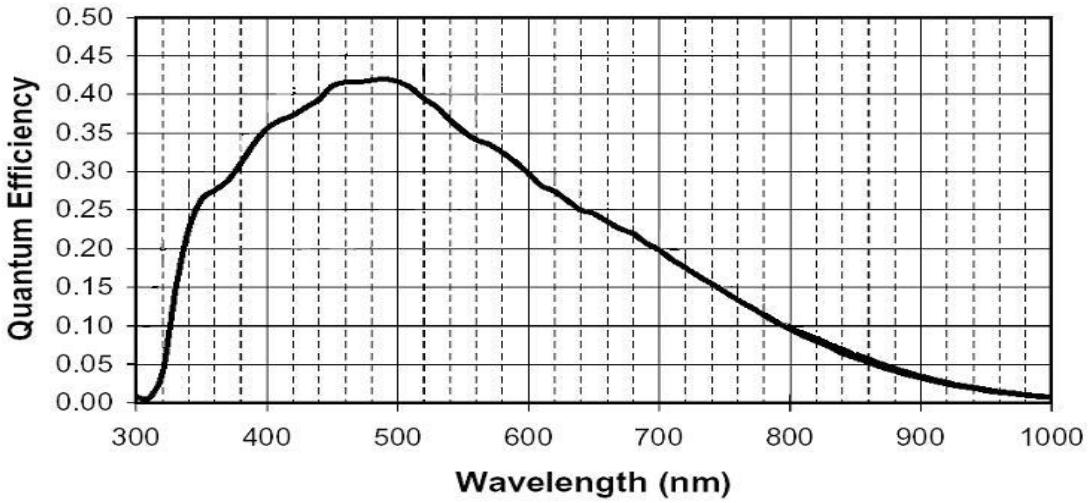

Figure 1.1a – KAI (TRUESENSE) CCD typical mono spectral response.
(Monochrome with the cover glass)

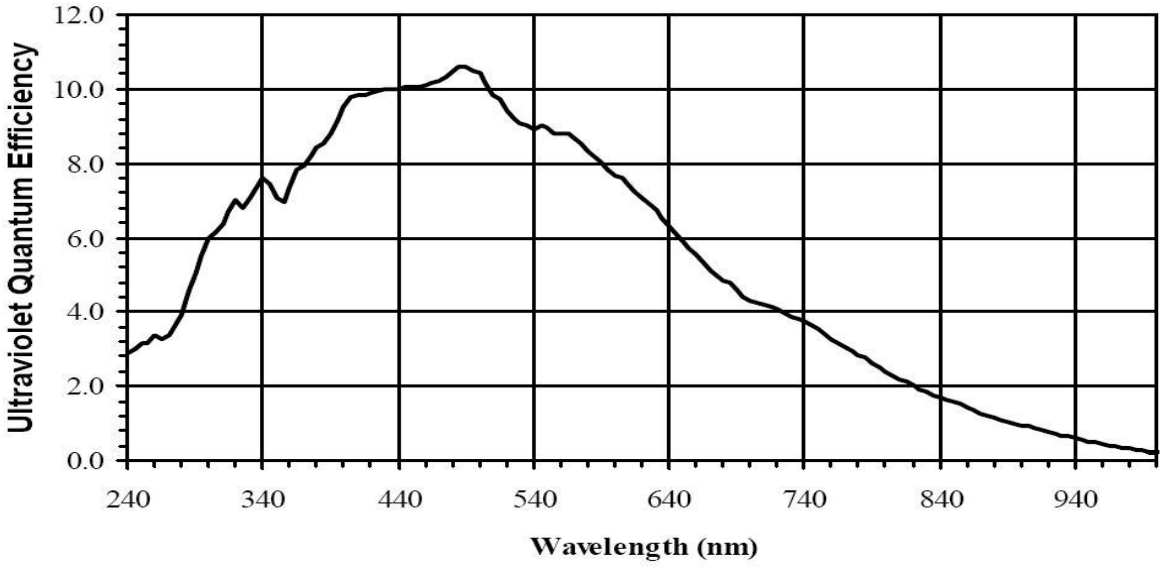

Figure 1.1b – KAI (TRUESENSE) CCD typical UV spectral response.
(UV quantum efficiency measured without cover glass and micro-lenses)

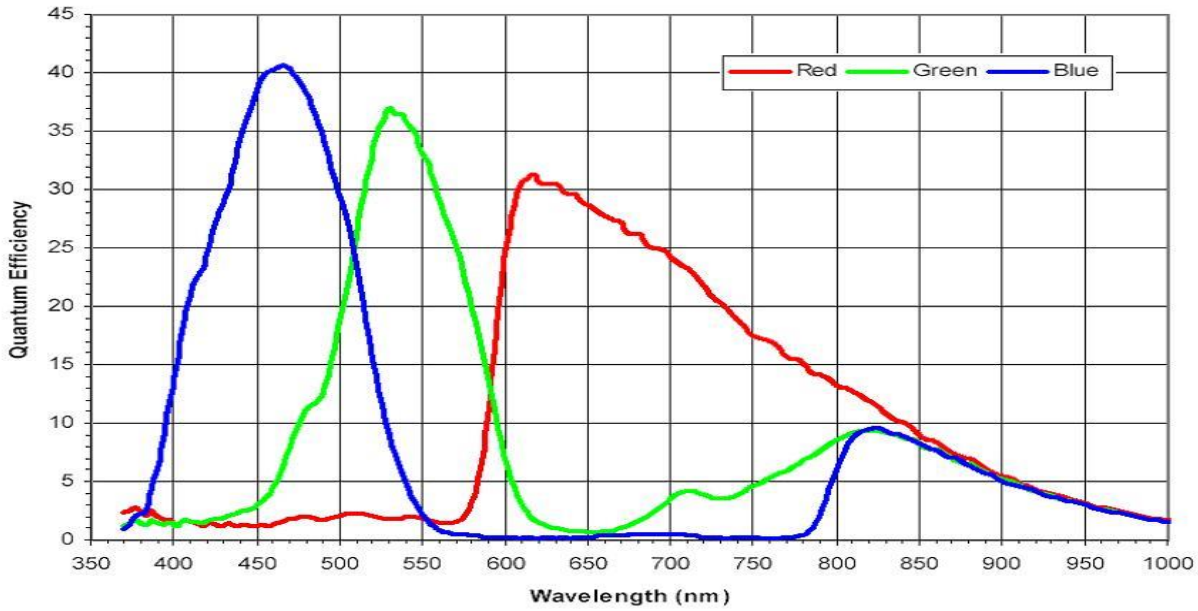

Figure 1.1c – KAI (TRUESENSE) CCD typical color spectral response.
(Color with the cover glass)

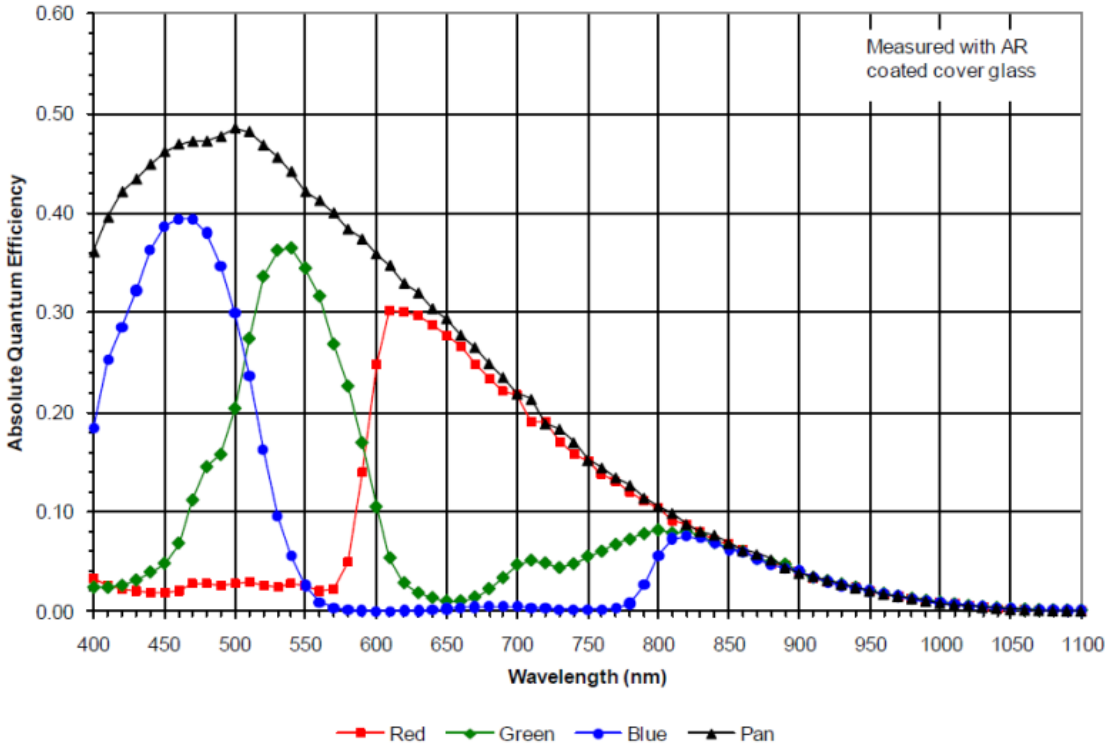

Figure 1.1d – TRUESENSE CCD typical spectral response with AR coated cover glass.

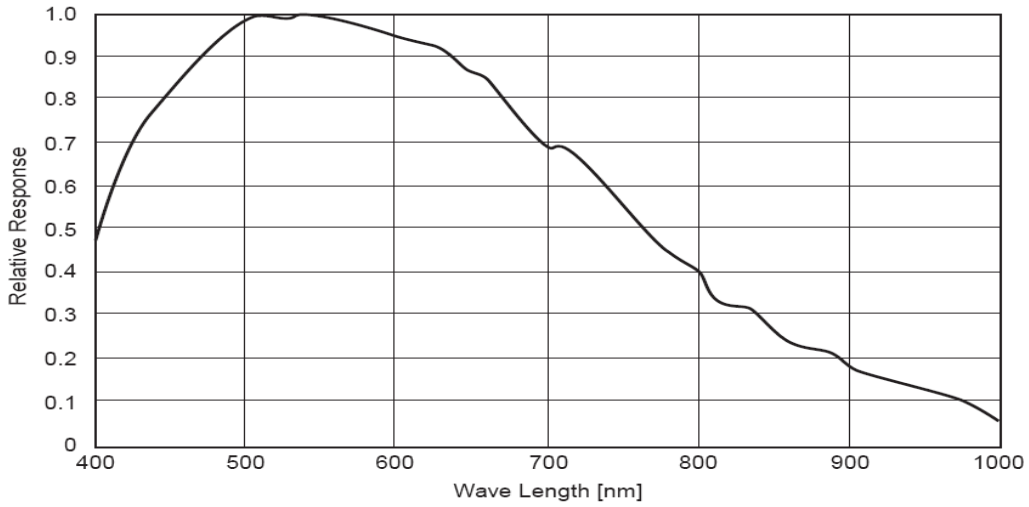

Figure 1.2a – ICX (SONY) CCD typical mono spectral response.
(Monochrome with the cover glass)

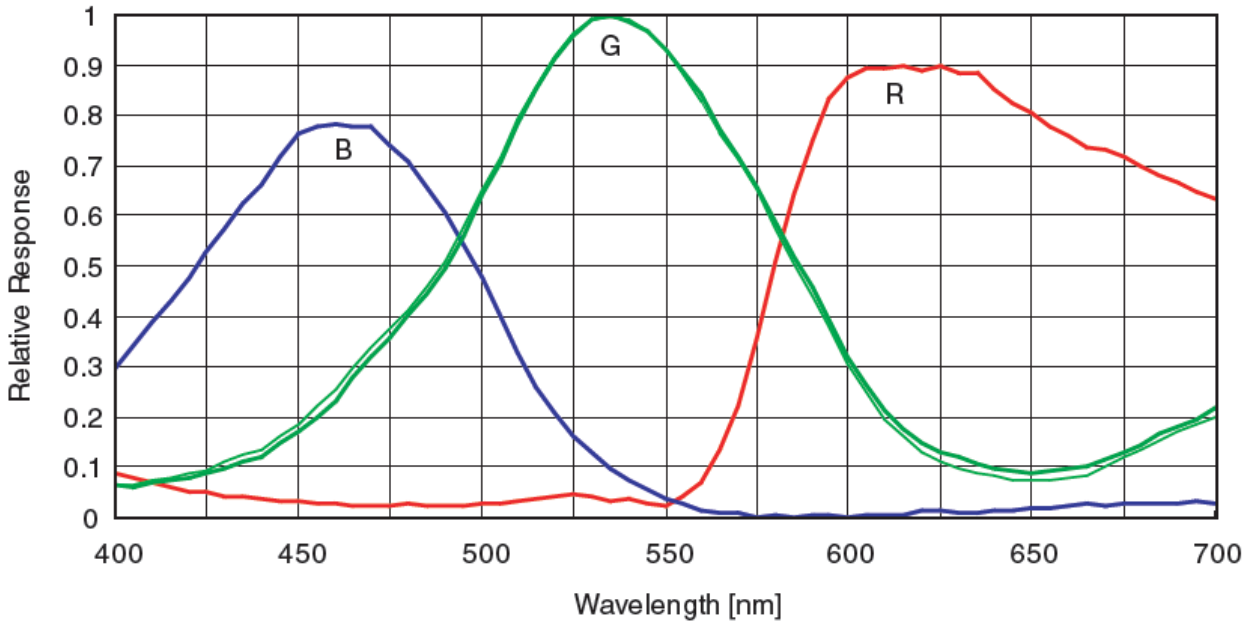

Figure 1.2b – ICX (Sony) CCD typical color spectral response.
(Color with the cover glass)

1.2.3 Bayer and TRUESENSE Pattern Information

Bobcat is available with Monochrome or Color CCD imager. To generate a color image a set of color filters (Red, Green, and Blue) arranged in a "Bayer" pattern, are placed over the pixels. The starting color is typically **GREEN** for TRUESENSE CCDs and **RED** for SONY CCDs – Figure 1.3. TRUESENSE Panchromatic ("clear") pixels (Pixel 1,1) are added to standard Red, Green, and Blue array. Pan pixels provide increased sensitivity by detecting all visible wavelengths. This provides a 2x – 4x increase in light sensitivity - Figure 1.3a.

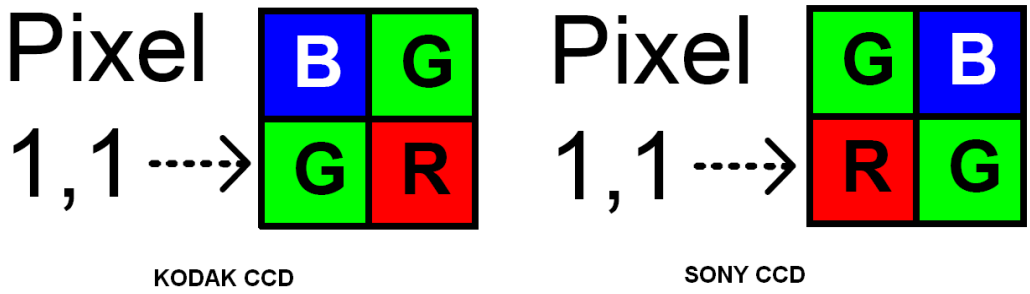

Figure 1.3 – Bayer Pattern arrangement.

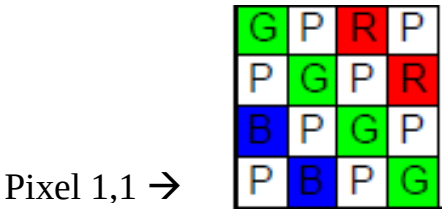

Figure 1.3a – TRUESENSE Pattern arrangement.

1.2.4 Technical Specifications

The following Tables describe features and specifications that relate to all Bobcat CLB, CLM, GEV, GEV PoE, and CXP cameras. Tables 1.1a to 1.1i are for CLB, GEV, GEV PoE, and CXP Single and Dual Tap cameras. Tables 1.1j to 1.1n are for CLM, and CXP Quad Tap cameras.

Features / Specifications	Common to all CL and GEV cameras
RS 232 interface	Yes
Frame Time (Long int.)	up to 16 sec
Auto White balance	Yes
Auto iris	Yes
Binning	2x2, 3x3, 4x4, 8x8
Test image	Yes, Image superimposition
Mirror image (H Mirror)	Yes
Defective pixel correction	Static, Dynamic, User DPM,
Hot pixel correction	Static, Dynamic, User HPM
Negative Image	Yes
I/O Control	4 inputs, 3 outputs
Strobe output	Two strobes, Active HIGH
Pulse Generator	Yes
In-camera Image Processing	Yes, User
Camera housing	Aluminum
Supply voltage range	10 V to 15 V DC
Upgradeable firmware	Yes
Upgradeable LUT, DPM, FFC	Yes
Operating	- 40.0 to + 80.0 deg C
Environmental - Storage	- 50.0 to + 90.0 deg C
Vibration, Shock	10G (20-200) Hz XYZ, 70G
Relative humidity	10% to 90% non-condensing

Specifications	B0610	B0620
Active image resolution	648/640 (H) x 488/480 (V)	648/640 (H) x 488/480 (V)
Active image area (H, V) mm	4.795/4.736 x 3.611/3.552, 5.92mm Diagonal	4.795/4.736 x 3.611/3.552, 5.92mm Diagonal
Pixel size	7.40 µm	7.40 µm
Video output	Digital, 8/10/12/14 bit	Digital, 8/10/12/ (14 sing.) bit
Output structure	Single	Single or Dual
Data clock	40.000/50.000 MHz	40.000/50.000 MHz
Camera interface	Base CL/GigEVision/CXP	Base CL/GigEVision/CXP
PoCL	12VDC, 2.3W (CL only)	12VDC, 3.3W (CL only)
Nominal frame rate	109/136 fps	207/259 fps
Maximum frame rate	Up to 1855 fps	Up to 2101 fps
S/N ratio	60 dB	60 dB
Shutter speed	1/500000 to 1/110 sec	1/500000 to 1/110 sec
Line time	Up to 200 us	Up to 200 us
Analog gain	0 to 36 dB per output	0 to 36 dB per output
Gain resolution	0.035 dB/step, 1024 steps	0.035 dB/step, 1024 steps
Analog CDS gain	(-3.0, 0.0, +3.0, +6.0) dB	(-3.0, 0.0, +3.0, +6.0) dB
Black level offset	1024 levels per output	1024 levels per output
Digital gain	1.0x to 3.0x (0.1x step)	1.0x to 3.0x (0.1x step)
Digital offset	-511 to + 511	-511 to + 511
Auto gain/exposure	Yes, with AOI	Yes, with AOI
Area of interest	Eight Independent AOIs	Eight Independent AOIs
User LUT	2 LUTs: Gamma, User LUT	2 LUTs: Gamma, User LUT
Flat field correction	No	No
Digital bit shift	7 bits, Left or Right	7 bits, Left or Right
Hardware trigger	Asynchronous	Asynchronous
Software trigger	Asynchronous, frame-grabber	Asynchronous, frame-grabber
Trigger modes	Standard, Double, Fast, Async., Frame integration	Standard, Double, Fast, Async., Frame integration
Trigger features	Rising/Falling edge, De-glitch, Delay, Strobe	Rising/Falling edge, De-glitch, Delay, Strobe
Camera Image Memory	TBD	TBD
Size (W x H x L) - CLB	(46 x 46 x 46.8) mm	(46 x 46 x 46.8) mm
Size (W x H x L) – GEV	(46 x 45 x 64.7) mm	(46 x 46 x 64.7) mm
Size (W x H x L) – GEV/PoE	(46 x 45 x 78.3) mm	(46 x 46 x 78.3) mm
Size (W x H x L) - CXP	(46 x 45 x 54.5) mm	(46 x 46 x 54.5) mm
Weight: CLB/GEV/GEVPoE/CXP	160/217/319/208/g	160/196/298/190/g
Min. illumination	1.0 Lux, f=1.4	1.0 Lux, f=1.4
Lens Mount	C mount, 1/3" format	C mount, 1/3" format
Power: CLB/GEV/GEVPOE/CXP	2.3/3.9/4.8/TBD/W	3.3/4.6/5.7/TBD/W

Table 1.1a – B0610, B0620 Camera Specifications.

Specifications	B1020	B1310	B1320
Active image resolution	1032/1024(H)x 1032/1024(V)	1296/1280(H) x 966/960(V)	1312/1280(H) x 728/720(V)
Active image area (H, V) mm	5.67/5.63(H)X5.67/5.63(V), 7.96mm Diagonal	4.86/4.80(H)X 3.62/3.60(V), 6.0mm Diagonal	7.22/7.04(H)X4.00/3.96(V), 8.08 Diagonal
Pixel size	5.50 µm	3.75 µm	5.50 µm
Video output	Digital, 8/10/12/14 bit	Digital, 8/10/12/14 bit 3x8RGB	Digital, 8/10/12/14 bit
Output structure	Single or Dual	Single RGB	Single or Dual
Data clock	40.000/50.000 MHz	40.000/64.000 MHz	40.000/50.000 MHz
Camera interface	Base CL/GigEVision/CXP	Base CL/GigEVision/CXP	Base CL/GigEVision/CXP
PoCL	12V, 3.3W (CL only)	12V, 2.0W (CL only)	12V, 3.3W (CL only)
Nominal frame rate	59/74 fps	26/39 fps	68/85 fps
Maximum frame rate	338 fps	191 fps	471 fps
S/N ratio	60dB	60dB	60dB
Shutter speed	1/500000 to 1/60	1/200000 to 1/26	1/2500000 to 1/68
Line time	Up to 200 us	up to 200 us	Up to 200 us
Analog gain	0 to 36 dB per output	0 to 36 dB per output	0 to 36 dB per output
Gain resolution	0.035 dB/step, 1024 steps	0.035 dB/step, 1024 steps	0.035 dB/step, 1024 steps
Analog CDS gain	(-3.0, 0.0, +3.0, +6.0) dB	(-3.0, 0.0, +3.0, +6.0) dB	(-3.0, 0.0, +3.0, +6.0) dB
Black level offset	1024 levels per output	1024 levels per output	1024 levels per output
Digital gain	1.0x to 3.0x (0.1x step)	1.0x to 3.0x (0.1x step)	1.0x to 3.0x (0.1x step)
Digital offset	-511 to + 511	-511 to + 511	-511 to + 511
Auto gain/exposure	Yes, with AOI	Yes, with AOI	Yes, with AOI
Area of interest	Eight Independent AOIs	Eight Independent AOIs	Eight Independent AOIs
User LUT	2 LUTs: Gamma, User LUT	2 LUTs: Gamma, User LUT	2 LUTs: Gamma, User LUT
Flat field correction	No	No	No
Digital bit shift	7 bits, Left or Right	7 bits, Left or Right	7 bits, Left or Right
Hardware trigger	Asynchronous	Asynchronous	Asynchronous
Software trigger	Asynchronous, frame-grabber	Asynchronous, frame-grabber	Asynchronous, frame-grabber
Trigger modes	Standard, Double, Fast, Async, Frame integration	Standard, Double, Fast, Async, Frame integration	Standard, Double, Fast, Async, Frame integration
Trigger features	Rising/Falling edge, De-glitch, Delay, Strobe	Rising/Falling edge, De-glitch, Delay, Strobe	Rising/Falling edge, De-glitch, Delay, Strobe
Camera Image Memory	TBD	TBD	TBD
Size (W x H x L) - CLB	(46X46X58.3) mm	(46X46X46.8) mm	(46X46X58.3) mm
Size (W x H x L) - GEV	(46X46X76.2) mm	(46X46X64.7) mm	(46X46X76.2) mm
Size (W x H x L) - GEV/POE	(46X46X89.8) mm	(46X46X78.3) mm	(46X46X89.8) mm
Size (W x H x L) - CXP	(46X46X65.80) mm	(46X46X54.5) mm	(46X46X65.80) mm
Weight: CLB/GEV/GEVPOE/CXP	165/233/343/223/g	160/246/348/237/g	165/284/394/274/g
Min. illumination	1 lux, F1.4	0.2 Lux, f=1.4	1 lux, F1.4
Lens Mount	C mount, 1/2" format CCD	C mount, 1/3" format CCD	C mount, 1/2" format CCD
Power: CLB/GEV/GEVPOE/CXP	3.3/4.7/5.9/TBD/W	2.0/3.4/4.5/TBD/W	3.3/4.7/5.9/TBD/W

Table 1.1b – B1020, B1310 and B1320 Camera Specifications

Specifications	B1410	B1411	B1610
Active image resolution	1392/1360(H) x 1040/1024(V)	1392/1360(H) x 1040/1024(V)	1628/1620(H) x 1236/1220(V)
Active image area (H, V) mm	8.978/8.772 x 6.708/6.605, 11 mm Diagonal	6.47/6.32(H) X 4.84/4.76(V), 8 mm Diagonal	7.16/7.12 x 5.44/5.37, 8.923 mm Diagonal
Pixel size	6.45 µm	4.65 µm	4.40 µm
Video output	Digital, 8/10/12/14 bit 3x8RGB	Digital, 8/10/12/14 bit 3x8RGB	Digital, 8/10/12/14 bit,3x8RGB
Output structure	Single	Single	Single
Data clock	40.000/54.000 MHz	40.000/54.000 MHz	40.000/64.000 MHz
Camera interface	Base CL / GigEVision	Base CL / GigEVision	Base CL / GigEVision
PoCL	12VDC, 2.8W (CL only)	12VDC, 2.9W (CL only)	12VDC, 2.6W (CL only)
Nominal frame rate	23/30 fps	24/31 fps	17/25 fps
Maximum frame rate	Up to 187 fps	Up to 243 fps	210 fps
S/N ratio	60 dB	60dB	60 dB
Shutter speed	1/250000 to 1/23 sec	1/250000 to 1/24	1/200000 to 1/16 sec
Line time	Up to 200 us	Up to 200 us	Up to 200 us
Analog gain	0 to 36 dB per output	0 to 36 dB per output	0 to 36 dB per output
Gain resolution	0.035 dB/step, 1024 steps	0.035 dB/step, 1024 steps	0.035 dB/step, 1024 steps
Analog CDS gain	(-3.0, 0.0, +3.0, +6.0) dB	(-3.0, 0.0, +3.0, +6.0) dB	(-3.0, 0.0, +3.0, +6.0) dB
Black level offset	1024 levels per output	1024 levels per output	1024 levels per output
Digital gain	1.0x to 3.0x (0.1x step)	71.0x to 3.0x (0.1x step)	1.0x to 3.0x (0.1x step)
Digital offset	-511 to + 511	-511 to + 511	-511 to + 511
Auto gain/exposure	Yes, with AOI	Yes, with AOI	Yes, with AOI
Area of interest	Eight Independent AOIs	Eight Independent AOIs	Eight Independent AOIs
User LUT	2 LUTs: Gamma, User LUT	2 LUTs: Gamma, User LUT	2 LUTs: Gamma, User LUT
Flat field correction	No	No	No
Digital bit shift	7 bits, Left or Right	7 bits, Left or Right	7 bits, Left or Right
Hardware trigger	Asynchronous	Asynchronous	Asynchronous
Software trigger	Asynchronous, frame-grabber	Asynchronous, frame-grabber	Asynchronous, frame-grabber
Trigger modes	Standard, Double, Fast, Async, Frame integration	Standard, Double, Fast, Async, Frame integration	Standard, Double, Fast, Async, Frame integration
Trigger features	Rising/Falling edge, De-glitch, Delay, Strobe	Rising/Falling edge, De-glitch, Delay, Strobe	Rising/Falling edge, De-glitch, Delay, Strobe
Camera Image Memory	TBD-DSP up to 2G	TBD-DSP up to 2G	TBD-DSP up to 2G
Size (W x H x L) - CLB	(46x46x46.8) mm	(46x46x46.8) mm	(46x46x46.8) mm
Size (W x H x L) - GEV	(46x46x64.7) mm	(46x46x64.7) mm	(46x46x64.7) mm
Size (W x H x L) - GEVPoE	(46x46x78.3) mm	(46x46x78.3) mm	(46x46x78.3) mm
Size (W x H x L) - CXP	(46x46x54.5) mm	(46x46x54.5) mm	(46x46x54.5) mm
Weight: CLB/GEV/GEVPoE/CXP	162/200/304/192/g	159/198/300/190/g	158/197/300/189/g
Min. illumination	0.2 Lux, f=1.4	0.2 Lux, f=1.4	0.5 Lux, f=1.4
Lens Mount	C mount, 2/3" format CCD	C mount, 1/2" format CCD	C mount, 1/1.8" format CCD
Power: CLB/GEV/GEVPoE/CXP	2.8/4.3/5.3/TBD/W	2.9/4.3/5.6/TBD/W	2.6/3.9/5.2/TBD/W

Table 1.1c – B1410, B1411, and B1610 Camera Specifications

Specifications	B1620	B1621	B1920
Active image resolution	1608/1600(H) x 1208/1200 (V)	1632/1600(H) x 1232/1200(V)	1928/1920(H) x 1084/1080(V)
Active image area (H, V) mm	11.89/11.84(H) x 8.94/8.88(V), 14.803mm Diagonal	8.98/8.80(H) x 6.78/6.60(V), 11.00mm Diagonal	14.267/14.208(H) x 8.021/7.992(V), 16.3mm Diagonal
Pixel size	7.40 µm	5.50 µm	7.40 µm
Video output	Digital, 8/10/12/14 bit	Digital, 8/10/12/14	Digital, 8/10/12/14 bit
Output structure	Single or Dual	Single or Dual	Single or Dual
Data clock	40.000/50.000 MHz	40.000/50.000 MHZ	40.000/50.000 MHz
Camera interface	Base CL / GigEVision	Base CL / GigEVision	Base CL / GigEVision
PoCL	12VDC, 3.5W (CL only)	12VDC, 3.3W (CL only)	12VDC, 3.6W (CL only)
Nominal frame rate	35/44 fps	33/42 fps	33/41 fps
Maximum frame rate	298 fps	247 fps	Up to 111 fps
S/N ratio	60 dB	60dB	60 dB
Shutter speed	1/100000 to 1/35 sec	1/500000 to 1/34	1/100000 to 1/33 sec
Line time	up to 200 us	up to 200 us	up to 200 us
Analog gain	0 to 36 dB per output	0 to 36 dB per output	0 to 36 dB per output
Gain resolution	0.035 dB/step, 1024 steps	0.035 dB/step, 1024 steps	0.035 dB/step, 1024 steps
Analog CDS gain	(-3.0, 0.0, +3.0, +6.0) dB	(-3.0, 0.0, +3.0, +6.0) dB	(-3.0, 0.0, +3.0, +6.0) dB
Black level offset	1024 levels per output	1024 levels per output	1024 levels per output
Digital gain	1.0x to 3.0x (0.1x step)	1.0x to 3.0x (0.1x step)	1.0x to 3.0x (0.1x step)
Digital offset	-511 to + 511	-511 to + 511	-511 to + 511
Auto gain/exposure	Yes, with AOI	Yes, with AOI	Yes, with AOI
Area of interest	Eight Independent AOIs	Eight Independent AOIs	Eight Independent AOIs
User LUT	2 LUTs: Gamma, User LUT	2 LUTs: Gamma, User LUT	2 LUTs: Gamma, User LUT
Flat field correction	Yes, User FFC	Yes, User FFC	Yes, User FFC
Digital bit shift	7 bits, Left or Right	7 bits, Left or Right	7 bits, Left or Right
Hardware trigger	Asynchronous	Asynchronous	Asynchronous
Software trigger	Asynchronous, frame-grabber	Asynchronous, frame-grabber	Asynchronous, frame-grabber
Trigger modes	Standard, Double, Fast, Async, Frame integration	Standard, Double, Fast, Async, Frame integration	Standard, Double, Fast, Async, Frame integration
Trigger features	Rising/Falling edge, De-glitch, Delay, Strobe	Rising/Falling edge, De-glitch, Delay, Strobe	Rising/Falling edge, De-glitch, Delay, Strobe
Camera Image Memory	TBD-DSP up to 2G	TBD-DSP up to 2G	TBD-DSP up to 2G
Size (W x H x L) - CLB	(46x46x50.6) mm	(46x46x58.3) mm	(46x46x50.6) mm
Size (W x H x L) - GEV	(46x46x68.6) mm	(46x46x76.2) mm	(46x46x68.6) mm
Size (W x H x L) - GEV/PoE	(46x46x82.2) mm	(46x46x89.8) mm	(46x46x82.2) mm
Size (W x H x L) - CXP	(46x46x58.25) mm	(46x46x65.8) mm	(46x46x58.3) mm
Weight: CLB/GEV/GEVPoE/CXP	164/219/320/210/g	171/232/342/223/g	164/217/319/208/g
Min. illumination	1.0 Lux, f=1.4	1.0 Lux, f=1.4	1.0 Lux, f=1.4
Lens Mount	C mount, 1.0" format CCD	C Mount, 2/3" format CCD	C mount, 1.0" format CCD
Power: CLB/GEV/GEVPoE/CXP	3.5/4.8/5.9/TBD/W	3.3/4.8/6.0/TBD/W	3.6/5.2/6.2/TBD/W

Table 1.1d – B1620, B1621 and B1920 Camera Specifications

Specifications	B1921	B1922	B1923
Active image resolution	1952/1920(H) x 1112/1080(V)	1940/1932(H) x 1460/1452(V)	1928/1920(H) x 1088/1080(V)
Active image area (H,V) mm	10.73/10.56(H) X 6.11/5.94(V), 12.1mm Diagonal	8.81/8.77(H) X 6.63/6.59(V), 10.972mm Diagonal	14.26/14.21(H) X 8.05/7.99(V), 16.3mm Diagonal
Pixel size	5.50 µm	4.54 µm	7.4 µm
Video output	Digital, 8/10/12/14 bit	Digital, 8/10/12/14 bit	Digital, 8/10/12/14 bit
Output structure	Single or Dual	Single or Dual	Single or Dual
Data clock	40.000/50.000 MHz	40.000/50.000 MHz	40.000/50.000 MHz
Camera interface	Base CL / GigEVision	Base CL / GigEVision	Base CL / GigEVision
PoCL	12VDC, 3.6W (CL only)	12VDC, 3.1W (CL only)	12VDC, 3.6W (CL only)
Nominal frame rate	32/39 fps	20/25 fps	30/37 fps
Maximum frame rate	Up to 271 fps	Up to 89 fps	160
S/N ratio	60dB	60dB	60dB
Shutter speed	1/500000 to 1/32	1/500000 to 1/32	1/500000 to 1/32
Line time	up to 200 us	up to 200 us	up to 200 us
Analog gain	0 to 36 dB per output	0 to 36 dB per output	0 to 36 dB per output
Gain resolution	0.035 dB/step, 1024 steps	0.035 dB/step, 1024 steps	0.035 dB/step, 1024 steps
Analog CDS gain	(-3.0, 0.0, +3.0, +6.0) dB	(-3.0, 0.0, +3.0, +6.0) dB	(-3.0, 0.0, +3.0, +6.0) dB
Black level offset	1024 levels per output	1024 levels per output	1024 levels per output
Digital gain	1.0x to 3.0x (0.1x step)	1.0x to 3.0x (0.1x step)	1.0x to 3.0x (0.1x step)
Digital offset	-511 to + 511	-511 to + 511	-511 to + 511
Auto gain/exposure	Yes, with AOI	Yes, with AOI	Yes, with AOI
Area of interest	Eight Independent AOIs	Eight Independent AOIs	Eight Independent AOIs
User LUT	2 LUTs: Gamma, User LUT	2 LUTs: Gamma, User LUT	2 LUTs: Gamma, User LUT
Flat field correction	Yes, User FFC	Yes, User FFC	Yes, User FFC
Digital bit shift	7 bits, Left or Right	7 bits, Left or Right	7 bits, Left or Right
Hardware trigger	Asynchronous	Asynchronous	Asynchronous
Software trigger	Asynchronous, frame-grabber	Asynchronous, frame-grabber	Asynchronous, frame-grabber
Trigger modes	Standard, Double, Fast, Async, Frame integration	Standard, Double, Fast, Async, Frame integration	Standard, Double, Fast, Async, Frame integration
Trigger features	Rising/Falling edge, De-glitch, Delay, Strobe	Rising/Falling edge, De-glitch, Delay, Strobe	Rising/Falling edge, De-glitch, Delay, Strobe
Camera Image Memory	TBD-DSP up to 2G	TBD-DSP up to 2G	TBD-DSP up to 2G
Size (W x H x L) - CLB	(46x46x58.3) mm	(46x46x59.6) mm	(46x46x58.3) mm
Size (W x H x L) - GEV	(46x46x76.2) mm	(46x46x77.5) mm	(46x46x76.2) mm
Size (W x H x L) - GEV/PoE	(46x46x89.8) mm	(46x46x91.1) mm	(46x46x89.8) mm
Size (W x H x L) - CXP	(46x46x65.8) mm	(46x46x67.2) mm	(46x46x65.8) mm
Weight: CLB/GEV/GEVPoE/CXP	164/233/343/224/g	201/236/349/229/g	170/TBD/TBD/TBD/g
Min. illumination	1.0 Lux, f=1.4	1.0 Lux, f=1.4	1.0 Lux, f=1.4
Lens Mount	C mount, 2/3 format CCD	C mount, 2/3 format CCD	C mount, 1.0" format CCD
Power: CLB/GEV/GEVPoE/CXP	3.6/5.2/6.3/TBD/W	3.1/4.7/5.8/TBD/W	3.6/TBD/TBD/TBD/W

Table 1.1e – B1921, B1922, and B1923 Camera Specifications

Specifications	B2020	B2021	B2320
Active image resolution	2056/2048(H) x 2060/2048(V)	2072/2048(H) x 2072/2048(V)	2352/2336(H) x 1768/1752(V)
Active image area (H,V) mm	15.21/15.15(H) x 15.24/15.15(V), 21.43mm diagonal	15.33/15.15(H) x 15.33/15.15(V), 21.40mm diagonal	12.93/12.85(H) x 9.72/9.64(V), 16.06mm diagonal
Pixel size	7.40 µm	7.40 µm	5.50 µm
Video output	Digital, 8/10/12/14 bit	Digital, 8/10/12/14 bit	Digital, 8/10/12/14 bit
Output structure	Single or Dual	Single or Dual	Single or Dual
Data clock	40.000/50.000 MHz	40.000/50.000 MHz	40.000/50.000 MHz
Camera interface	Base CL/GEV	Base CL/GEV	Base CL/GEV
PoCL	12VDC, 4.0W (CL only)	12VDC, 4.0W (CL only)	12VDC, 3.6W (CL only
Nominal frame rate	16/20 fps	13/17 fps	16/21 fps
Maximum frame rate	153 fps	49 fps	122 fps
S/N ratio	60 dB	60 dB	60 dB
Shutter speed	1/100000 to 1/16 sec	1/100000 to 1/16 sec	1/500000 to 1/16
Line time	up to 200 us	up to 200 us	up to 200 us
Analog gain	0 to 36 dB per output	0 to 36 dB per output	0 to 36 dB per output
Gain resolution	0.035 dB/step, 1024 steps	0.035 dB/step, 1024 steps	0.035 dB/step, 1024 steps
Analog CDS gain	(-3.0, 0.0, +3.0, +6.0) dB	(-3.0, 0.0, +3.0, +6.0) dB	(-3.0, 0.0, +3.0, +6.0) dB
Black level offset	1024 levels per output	1024 levels per output	1024 levels per output
Digital gain	1.0x to 3.0x (0.1x step)	1.0x to 3.0x (0.1x step)	1.0x to 3.0x (0.1x step)
Digital offset	-511 to + 511	-511 to + 511	-511 to + 511
Auto gain/exposure	Yes, with AOI	Yes, with AOI	Yes, with AOI
Area of interest	Eight Independent AOIs	Eight Independent AOIs	Eight Independent AOIs
User LUT	2 LUTs: Gamma, User LUT	2 LUTs: Gamma, User LUT	2 LUTs: Gamma, User LUT
Flat field correction	Yes, User FFC	Yes, User FFC	Yes, User FFC
Digital bit shift	7 bits, Left or Right	7 bits, Left or Right	7 bits, Left or Right
Hardware trigger	Asynchronous	Asynchronous	Asynchronous
Software trigger	Asynchronous, frame-grabber	Asynchronous, frame-grabber	Asynchronous, frame-grabber
Trigger modes	Standard, Double, Fast, Async, Frame integration	Standard, Double, Fast, Async, Frame integration	Standard, Double, Fast, Async, Frame integration
Trigger features	Rising/Falling edge, De-glitch, Delay, Strobe	Rising/Falling edge, De-glitch, Delay, Strobe	Rising/Falling edge, De-glitch, Delay, Strobe
Camera Image Memory	TBD-DSP up to 2G	TBD-DSP up to 2G	TBD-DSP up to 2G
Size (W x H x L) - CLB	(60x60x45.1) mm	(60x60x53.1) mm	(46x46x58.3) mm
Size (W x H x L) - GEV	(60x60x63.2) mm	(60x60x70.8) mm	(46x46x76.2) mm
Size (W x H x L) - GEV/PoE	(60x60x76.8) mm	(60x60x84.4) mm	(46x46x89.8) mm
Size (W x H x L) - CXP	(60x60x52.8) mm	(60x60x60.1) mm	(46x46x65.8) mm
Weight: CLB/GEV/GEVPoE/CXP	340/377/496/351/g	340/377/496/351/g	165/234/344/224/g
Min. illumination	1.0 Lux, f=1.4	1.0 Lux, f=1.4	1.0 Lux, f=1.4
Lens Mount	F mount, 1.3" format CCD	F mount, 1.3" format CCD	C Mount,1.0" format CCD
Power: CLB/GEV/GEVPoE/CXP	4.0/5.7/6.9/TBD/W	4.0/5.7/6.8/TBD/W	3.6/5.3/6.5/TBD/W

Table 1.1f – B2020, B2021 and B2320 Camera Specifications

Specifications	B2510	B2520	B2720
Active image resolution	2456/2448(H) x 2058/2050(V)	2456/2448(H) x 2058/2050 (V)	2756/2750(H) x 2208/2200(V)
Active image area (H,V) mm	8.47/8.44(H) x 7.10/7.07(V), 11.016mm diagonal	8.47/8.44(H) x 7.10/7.07(V), 11.016mm diagonal	12.51/12.48(H) x 10.02/9.98(V), 15.99mm diagonal
Pixel size	3.45 µm	3.45 µm	4.54 µm
Video output	Digital, 8/10/12/14 bit	Digital, 8/10/12/14 bit	Digital, 8/10/12/14 bit
Output structure	Dual	Dual	Dual
Data clock	40.000/64.000 MHz	40.000/64.000 MHz	40.000/50.000 MHz
Camera interface	Base CL/GEV	Base CL/GEV	Base CL/GEV
PoCL	12VDC, 3.2W (CL only)	12VDC, 4.8W (CL only)	12VDC, 3.3W (CL only)
Nominal frame rate	6.5/9.6 fps	11/16 fps	10.2/12.7 fps
Maximum frame rate	49 fps	50 fps	58 fps
S/N ratio	53 dB	53 dB	53 dB
Shutter speed	1/80000 to 1/11 sec	1/80000 to 1/11 sec	1/80000 to 1/11 sec
Line time	up to 200 us	up to 200 us	up to 200 us
Analog gain	0 to 36 dB per output	0 to 36 dB per output	0 to 36 dB per output
Gain resolution	0.035 dB/step, 1024 steps	0.035 dB/step,1024 steps	0.035 dB/step,1024 steps
Analog CDS gain	(-3.0, 0.0, +3.0, +6.0) dB	(-3.0, 0.0, +3.0, +6.0) dB	(-3.0, 0.0, +3.0, +6.0) dB
Black level offset	1024 levels per output	1024 levels per output	1024 levels per output
Digital gain	1.0x to 3.0x (0.1x step)	1.0x to 3.0x (0.1x step)	1.0x to 3.0x (0.1x step)
Digital offset	-511 to + 511	-511 to + 511	-511 to + 511
Auto gain/exposure	Yes, with AOI	Yes, with AOI	Yes, with AOI
Area of interest	Eight Independent AOIs	Eight Independent AOIs	Eight Independent AOIs
User LUT	2 LUTs: Gamma, User LUT	2 LUTs: Gamma, User LUT	2 LUTs: Gamma, User LUT
Flat field correction	No	No	No
Digital bit shift	7 bits, Left or Right	7 bits, Left or Right	7 bits, Left or Right
Hardware trigger	Asynchronous	Asynchronous	Asynchronous
Software trigger	Asynchronous, frame-grabber	Asynchronous, frame-grabber	Asynchronous, frame-grabber
Trigger modes	Standard, Double, Fast, Async, Frame integration	Standard, Double, Fast, Async, Frame integration	Standard, Double, Fast, Async, Frame integration
Trigger features	Rising/Falling edge, De-glitch, Delay, Strobe	Rising/Falling edge, De-glitch, Delay, Strobe	Rising/Falling edge, De-glitch, Delay, Strobe
Camera Image Memory	TBD-DSP up to 2G	TBD-DSP up to 2G	TBD-DSP up to 2G
Size (W x H x L) - CLB	(46x46x46.8) mm	(46 x 46 x 46.8) mm	(46 x 46 x 59.6) mm
Size (W x H x L) - GEV	(46x46x64.7) mm	(46 x 46 x 64.7) mm	(46 x 46 x 77.5) mm
Size (W x H x L) - GEV/PoE	(46x46x78.3) mm	(46x46x78.3) mm	(46x46x99.1) mm
Size (W x H x L) - CXP	(46x46x54.5) mm	(46x46x54.5) mm	(46x46x67.2) mm
Weight: CLB/GEV/GEVPoE/CXP	159/197/299/189/g	159/197/298/189/g	201/236/349/229/g
Min. illumination	.5 Lux, f=1.4	.5 Lux, f=1.4	.5 Lux, f=1.4
Lens Mount	C Mount, 2/3" format CCD	C mount, 2/3" format CCD	C mount, 1.0" format CCD
Power: CLB/GEV/GEVPoE/CXP	2.6/4.0/5.4/TBD/W	3.4/5.2/6.3/TBD/W	3.5/5.0/6.1/TBD/W

Table 1.1f – B2510, B2520 and B2720 Camera Specifications

Specifications	B3320	B3420	B4020
Active image resolution	3312/3296(H) x 2488/2472(V)	3388/3380(H) x 2712/2704(V	4032/4008(H) x 2688/2672(V)
Active image area (H, V) mm	18.21/18.12(H) x 13.68/13.59(V) 22.6mm diagonal	12.51/12.48(H) x 10.02/9.98(V), 15.99mm diagonal	36.28/36.07(H) x 24.19/24.04(V),43.3mm diagonal
Pixel size	5.50 µm	3.69 µm	9.00 µm
Video output	Digital, 8/10/12/14 bit	Digital, 8/10/12/14 bit	Digital, 8/10/12 bit
Output structure	Single or Dual	Single or Dual	Single or Dual
Data clock	40.000/50.000 MHz	40.000/50.000 MHz	30.000/40.000 MHz
Camera interface	Base CL/GEV	Base CL/GEV	Base CL/GigEVision/CXP
PoCL	12VDC, 4.0W (CL only)	12VDC, 4.0W (CL only)	No
Nominal frame rate	8.5/10.6 fps	6.9/8.6 fps	4.8/6.4 fps
Maximum frame rate	71 fps	41 fps	39 fps
S/N ratio	60 dB	60 dB	60 dB
Shutter speed	1/500000 to 1/8	1/500000 to 1/8	1/100000 to 1/5 sec
Line time	up to 200 us	up to 200 us	up to 200 us
Analog gain	0 to 36 dB per output	0 to 36 dB per output	0 to 36 dB per output
Gain resolution	0.035 dB/step, 1024 steps	0.035 dB/step, 1024 steps	0.035 dB/step, 1024 steps
Analog CDS gain	(-3.0, 0.0, +3.0, +6.0) dB	(-3.0, 0.0, +3.0, +6.0) dB	(-3.0, 0.0, +3.0, +6.0) dB
Black level offset	1024 levels per output	1024 levels per output	1024 levels per output
Digital gain	1.0x to 3.0x (0.1x step)	1.0x to 3.0x (0.1x step)	1.0x to 3.0x (0.1x step)
Digital offset	-511 to + 511	-511 to + 511	-511 to + 511
Auto gain/exposure	Yes, with AOI	Yes, with AOI	Yes, with AOI
Area of interest	Eight Independent AOIs	Eight Independent AOIs	Eight Independent AOIs
User LUT	2 LUTs: Gamma, User LUT	2 LUTs: Gamma, User LUT	2 LUTs: Gamma, User LUT
Flat field correction	Yes, User FFC	Yes, User FFC	Yes, User FFC
Digital bit shift	7 bits, Left or Right	7 bits, Left or Right	7 bits, Left or Right
Hardware trigger	Asynchronous	Asynchronous	Asynchronous
Software trigger	Asynchronous, frame-grabber	Asynchronous, frame-grabber	Asynchronous, frame-grabber
Trigger modes	Standard, Double, Fast, Async, Frame integration	Standard, Double, Fast, Async, Frame integration	Standard, Double, Fast, Async, Frame integration
Trigger features	Rising/Falling edge, De-glitch, Delay, Strobe	Rising/Falling edge, De-glitch, Delay, Strobe	Rising/Falling edge, De-glitch, Delay, Strobe
Camera Image Memory	TBD-DSP up to 2G	TBD-DSP up to 2G	TBD-DSP up to 2G
Size (W x H x L) - CLB	(60x60x53.1) mm	(60x60x59.6) mm	(60x60x45.1) mm
Size (W x H x L) - GEV	(60x60x70.8) mm	(60x60x77.5) mm	(60x60x63.2) mm
Size (W x H x L) - GEV/POE	(60x60x84.4) mm	(60x60x91.1) mm	(60x60x76.8) mm
Size (W x H x L) - CXP	(60x60x60.1) mm	(60x60x67.2) mm	(60x60x52.8) mm
Weight: CLB/GEV/GEVPoE/CXP	325/398/534/374/g	325/398/534/374/g	350/372/503/354/g
Min. illumination	1.0 Lux, f=1.4	1.0 Lux, f=1.4	1.0 Lux, f=1.4
Lens Mount	F mount, 1.3" format CCD	F mount, 1.0" format CCD	F mount, 43.3 mm format CCD
Power: CLB/GEV/GEVPoE/CXP	4.0/5.7/6.9/TBD/W	4.0/5.1/6.2/TBD/W	4.1/5.8/7.0/TBD/W

Table 1.1g – B3320, B3420 and B4020 Camera Specifications

Specifications	B4820	B4821	B4822
Active image resolution	4904/4872(H)x3280/3248(V)	4920/4896(H) x 3280/3264(V)	4880/4864(H) x 3256/3232(V)
Active image area (H, V) mm	36.29/36.05(H) x 24.27/23.03, 43.3mm diagonal	27.06/26.93(H) x 18.04/17.95, 32.36mm diagonal	36.11/36.00(H) x 24.09/23.92, 43.2mm diagonal
Pixel size	7.40 µm	5.50 µm	7.4 µm
Video output	Digital, 8/10/12/14 bit	Digital, 8/10/12/14 bit	Digital, 8/10/12/14 bit
Output structure	Single or Dual	Single or Dual	Single or Dual
Data clock	30.000/40.000 MHz	30.000/40.000 MHz	30.000/40.000 MHz
Camera interface	Base CL/GEV	Base CL/GEV	Base CL/GEV
PoCL	12VDC, 3.8W (CL only)	12VDC, 3.8W (CL only)	No
Nominal frame rate	3.2/4.2 fps	3.1/4.2 fps	3.0/4.1 fps
Maximum frame rate	24.8 fps	21 fps	13.2 fps
S/N ratio	60 dB	60dB	64dB
Shutter speed	1/67000 to 1/3 sec	1/125000 to 1/3	1/125000 to 1/3
Line time	up to 200 us	up to 200 us	up to 200 us
Analog gain	0 to 36 dB per output	0 to 36 dB per output	0 to 36 dB per output
Gain resolution	0.035 dB/step, 1024 steps	0.035 dB/step, 1024 steps	0.035 dB/step, 1024 steps
Analog CDS gain	(-3.0, 0.0, +3.0, +6.0) dB	(-3.0, 0.0, +3.0, +6.0) dB	(-3.0, 0.0, +3.0, +6.0) dB
Black level offset	1024 levels per output	1024 levels per output	1024 levels per output
Digital gain	1.0x to 3.0x (0.1x step)	1.0x to 3.0x (0.1x step)	1.0x to 3.0x (0.1x step)
Digital offset	-511 to + 511	-511 to + 511	-511 to + 511
Auto gain/exposure	Yes, with AOI	Yes, with AOI	Yes, with AOI
Area of interest	Eight Independent AOIs	Eight Independent AOIs	Six Independent AOIs
User LUT	2 LUTs: Gamma, User LUT	2 LUTs: Gamma, User LUT	2 LUTs: Gamma, User LUT
Flat field correction	Yes, User FFC	Yes, User FFC	Yes, User FFC
Digital bit shift	7 bits, Left or Right	7 bits, Left or Right	7 bits, Left or Right
Hardware trigger	Asynchronous	Asynchronous	Asynchronous
Software trigger	Asynchronous, frame-grabber	Asynchronous, frame-grabber	Asynchronous, frame-grabber
Trigger modes	Standard, Double, Fast, Async, Frame integration	Standard, Double, Fast, Async, Frame integration	Standard, Double, Fast, Async, Frame integration
Trigger features	Rising/Falling edge, De-glitch, Delay, Strobe	Rising/Falling edge, De-glitch, Delay, Strobe	Rising/Falling edge, De-glitch, Delay, Strobe
Camera Image Memory	TBD-DSP up to 2G	TBD-DSP up to 2G	TBD-DSP up to 2G
Size (W x H x L) - CLB	(60x60x45.1) mm	(60x60x53.1) mm	(60x60x53.1) mm
Size (W x H x L) - GEV	(60x60x63.2) mm	(60x60x70.8) mm	(60x60x70.8) mm
Size (W x H x L) - GEV/PoE	(60x60x76.8) mm	(60x60x84.4) mm	(60x60x84.4) mm
Size (W x H x L) - CXP	(60x60x52.8) mm	(60x60x60.1) mm	(60x60x60.1) mm
Weight: CLB/GEV/GEVPoE/CXP	330/378/511/366/g	354/404/545/384/g	353/403/543/383/g
Min. illumination	1.0 Lux, f=1.4	1.0 Lux, f=1.4	1.0 Lux, f=1.4
Lens Mount	F mount,43.3mm format CCD	F mount,32.36mm format CCD	F mount,32.36mm format CCD
Power: CLB/GEV/GEVPoE/CXP	3.8/5.5/6.7/TBD/W	3.8/5.8/6.9/TBD/W	4.5/6.1/7.4/TBD/W

Table 1.1h – B4820, B4821 and B4822 Camera Specifications

Specifications	B6620
Active image resolution	6600/6576(H) x 4400/4384(V)
Active image area (H, V) mm	36.30/36.17(H) x 24.20/24.11,43.47mm diagonal
Pixel size	5.50 µm
Video output	Digital, 8/10/12/14 bit
Output structure	Single or Dual
Data clock	30.000/40.000 MHz
Camera interface	Base CL/GigEVision/CXP
Nominal frame rate	1.8/2.4 fps
Maximum frame rate	10.8 fps
S/N ratio	60dB
Shutter speed	1/125000 to 1/2.5
Line time	up to 200 us
Analog gain	0 to 36 dB per output
Gain resolution	0.035 dB/step, 1024 steps
Analog CDS gain	(-3.0, 0.0, +3.0, +6.0) dB
Black level offset	1024 levels per output
Digital gain	1.0x to 3.0x (0.1x step)
Digital offset	-511 to + 511
Auto gain/exposure	Yes, with AOI
Area of interest	Six Independent AOIs
User LUT	2 LUTs: Gamma, User LUT
Flat field correction	Yes, User FFC
Digital bit shift	7 bits, Left or Right
Hardware trigger	Asynchronous
Software trigger	Asynchronous, frame-grabber
Trigger modes	Standard, Double, Fast, Async, Frame integration
Trigger features	Rising/Falling edge, De-glitch, Delay, Strobe
Camera Image Memory	TBD-DSP up to 2G
Size (W x H x L) – CLB	(60x60x53.1) mm
Size (W x H x L) – GEV	(60x60x70.8) mm
Size (W x H x L) – GEV/POE	(60x60x84.4) mm
Size (W x H x L) – CXP	(60x60x60.1) mm
Weight: CLB/GEV/GEVPoE/CXP	355/405/545/391/g
Min. illumination	1.0 Lux, f=1.4
Lens Mount	F mount,43.3mm format CCD
Power: CLB/GEV/GEVPOE/CXP	4.5/6.0/7.2/TBD/W

Table 1.1i – B6620 Camera Specifications

Specifications	B1040	B1340	B1641
Active image resolution	1032/1024 (H)x 1032/1024 (V)	1312/1280 (H) x 728/720 (V)	1632/1600 (H) x 1232/1200 (V)
Active image area (H, V) mm	5.67/5.63(H)X5.67/5.63(V),7.96 mm diagonal	7.21/7.04(H)X4.00/3.96(V),8.08 mm diagonal	8.97/8.80(H) x6.77/6.60(V),11.0mm diagonal
Pixel size	5.50 µm	5.50 µm	5.50 µm
Video output	Digital, 8/10/12 bit	Digital, 8/10/12 bit	Digital, 8/10/12 bit
Output structure	Quad	Quad	Quad
Data clock	40.000/50.000 MHz	40.000/50.000 MHz	40.000/50.000 MHZ
Camera interface	Medium CL	Medium CL	Medium CL
PoCL (Dual cables)	12VDC, 6.7W (CL only)	12VDC, 6.7W (CL only)	12VDC, 6.8W (CL only)
Nominal frame rate	118/148 fps	135/169 fps	67/83 fps
Maximum frame rate	689 fps	922 fps	496 fps
S/N ratio	60dB	60dB	60dB
Shutter speed	1/500000 to1/60	1/2500000 to/68	1/500000 to 1/34
Line time	Up to 200 us	Up to 200 us	up to 200 us
Analog gain	0 to 36 dB per output	0 to 36 dB per output	0 to 36 dB per output
Gain resolution	0.035 dB/step, 1024 steps	0.035 dB/step, 1024 steps	0.035 dB/step, 1024 steps
Analog CDS gain	(-3.0, 0.0, +3.0, +6.0) dB	(-3.0, 0.0, +3.0, +6.0) dB	(-3.0, 0.0, +3.0, +6.0) dB
Black level offset	1024 levels per output	1024 levels per output	1024 levels per output
Digital gain	1.0x to 3.0x (0.1x step)	1.0x to 3.0x (0.1x step)	1.0x to 3.0x (0.1x step)
Digital offset	-511 to + 511	-511 to + 511	-511 to + 511
Auto gain/exposure	Yes, with AOI	Yes, with AOI	Yes, with AOI
Area of interest	Eight Independent AOIs	Eight Independent AOIs	Eight Independent AOIs
User LUT	2 LUTs: Gamma, User LUT	2 LUTs: Gamma, User LUT	2 LUTs: Gamma, User LUT
Flat field correction	No	No	Yes, User FFC
Digital bit shift	7 bits, Left or Right	7 bits, Left or Right	7 bits, Left or Right
Hardware trigger	Asynchronous	Asynchronous	Asynchronous
Software trigger	Asynchronous, frame-grabber	Asynchronous, frame-grabber	Asynchronous, frame-grabber
Trigger modes	Standard, Double, Fast, Async, Frame integration	Standard, Double, Fast, Async, Frame integration	Standard, Double, Fast, Async, Frame integration
Trigger features	Rising/Falling edge, De-glitch, Delay, Strobe	Rising/Falling edge, De-glitch, Delay, Strobe	Rising/Falling edge, De-glitch, Delay, Strobe
Camera Image Memory	TBD	TBD	TBD-DSP up to 2G
Size (W x H x L) - CLM	(46X46X50.6) mm	(46X46X50.6) mm	(46x46x50.6) mm
Size (W x H x L) - CXP	TBD	TBD	TBD
Weight: CLM/CXP	337/TBD/g	337/TBD/g	337/TBD/g
Min. illumination	1 lux, F1.4	1 lux, F1.4	1.0 Lux, f=1.4
Lens Mount	C mount, 1/2" format CCD	C mount, 1/2" format CCD	C Mount, 2/3 format CCD
Power: CLM/CXP	6.7/TBD/W	6.7/TBD/W	6.8/TBD/W

Table 1.1j – B1040, B1340, and B1641 Camera Specifications

Specifications	B1941	B1942	B1943
Active image resolution	1952/1920 (H) x 1112/1080 (V)	1940 (H) x 1460 (V)	1928 (H) x 1088 (V)
Active image area (H,V) mm	10.73/10.56(H) x 6.11/5.94(V), 12.1mm diagonal	8.81(H) x 6.63(V), 10.972mm diagonal	14.26(H) X 8.05(V), 16.3mm Diagonal
Pixel size	5.5 µm	4.54 µm	7.4 µm
Video output	Digital, 8/10/12 bit	Digital, 8/10/12 bit	Digital, 8/10/12 bit
Output structure	Quad	Quad	Quad
Data clock	40.000/50.000 MHz	40.000/50.000 MHz	40.000/50.000 MHz
Camera interface	Medium CL	Medium CL	Medium CL
PoCL (Dual cables)	12VDC, 6.9W (CL only)	12VDC, 5.5W (CL only)	TBD
Nominal frame rate	62/79 fps	40/54 fps	60/75 fps
Maximum frame rate	Up to 542 fps	Up to 192 fps	Up to 248 fps
S/N ratio	60 dB	60 dB	60 dB
Shutter speed	1/500000 to 1/62 sec	1/500000 to 1/32 sec	1/500000 to 1/32 sec
Line time	up to 16 sec	up to 16 sec	up to 16 sec
Analog gain	0 to 36 dB per output	0 to 36 dB per output	0 to 36 dB per output
Gain resolution	0.035 dB/step, 1024 steps	0.035 dB/step, 1024 steps	0.035 dB/step, 1024 steps
Analog CDS gain	(-3.0, 0.0, +3.0, +6.0) dB	(-3.0, 0.0, +3.0, +6.0) dB	(-3.0, 0.0, +3.0, +6.0) dB
Black level offset	1024 levels per output	1024 levels per output	1024 levels per output
Digital gain	1.0x to 3.0x (0.1x step)	1.0x to 3.0x (0.1x step)	1.0x to 3.0x (0.1x step)
Digital offset	-511 to + 511	-511 to + 511	-511 to + 511
Auto gain/exposure	Yes, with AOI	Yes, with AOI	Yes, with AOI
Area of interest	Six Independent AOIs	Six Independent AOIs	Six Independent AOIs
User LUT	2 LUTs: Gamma, User LUT	2 LUTs: Gamma, User LUT	2 LUTs: Gamma, User LUT
Flat field correction	Yes, User FFC	Yes, User FFC	Yes, User FFC
Digital bit shift	7 bits, Left or Right	7 bits, Left or Right	7 bits, Left or Right
Hardware trigger	Asynchronous	Asynchronous	Asynchronous
Software trigger	Asynchronous, frame-grabber	Asynchronous, frame-grabber	Asynchronous, frame-grabber
Trigger modes	Standard, Double, Fast, Async, Frame integration	Standard, Double, Fast, Async, Frame integration	Standard, Double, Fast, Async, Frame integration
Trigger features	Rising/Falling edge, De-glitch, Delay, Strobe	Rising/Falling edge, De-glitch, Delay, Strobe	Rising/Falling edge, De-glitch, Delay, Strobe
Camera Image Memory	TBD-DSP up to 2G	TBD-DSP up to 2G	TBD-DSP up to 2G
Size (W x H x L) - CLM	(60x60x53) mm	(60x60x53) mm	(60x60x53.1) mm
Size (W x H x L) - CXP	TBD	TBD	TBD
Weight: CLM/CXP	337/TBD/g	337/TBD/g	TBD
Min. illumination	1.0 Lux, f=1.4	0.5 Lux, f=1.4	0.5 Lux, f=1.4
Lens Mount	C mount, 2/3" format CCD	C mount, 2/3" format CCD	C mount, 1.0" format CCD
Power: CLM/CXP	6.9/TBD/W	5.5/TBD/W	TBD

Table 1.1k – B1941, B1942, B1943 Camera Specifications

Specifications	B2041	B2340	B2740
Active image resolution	2072/2048 (H) x 2072/2048 (V)	2352/2336 (H) x 1768/1752 (V)	2756(H) x 2208(V)
Active image area (H,V) mm	15.33/15.20(H) x 15.22/15.20(V), 21.40mm diagonal	12.93/12.85(H) x 9.72/9.64(V), 16.06mm diagonal	12.51(H) x 10.02(V), 15.99mm diagonal
Pixel size	7.4 µm	5.50 µm	4.54 µm
Video output	Digital, 8/10/12 bit	Digital, 8/10/12 bit	Digital, 8/10/12 bit
Output structure	Quad	Quad	Quad
Data clock	40.000/50.000 MHz	40.000/50.000 MHz	40.000/50.000 MHz
Camera interface	Medium CL	Medium CL	Medium CL
PoCL	Refer to Section 1.4.4	TBD	TBD
Nominal frame rate	26/34 fps	33/41 fps	20/25
Maximum frame rate	92 fps	255 fps	118 fps
S/N ratio	60 dB	60 dB	60 dB
Shutter speed	1/500000 to 1/16	1/500000 to 1/16	1/500000 to 1/16
Line time	up to 200 us	up to 200 us	up to 200 us
Analog gain	0 to 36 dB per output	0 to 36 dB per output	0 to 36 dB per output
Gain resolution	0.035 dB/step, 1024 steps	0.035 dB/step, 1024 steps	0.035 dB/step, 1024 steps
Analog CDS gain	(-3.0, 0.0, +3.0, +6.0) dB	(-3.0, 0.0, +3.0, +6.0) dB	(-3.0, 0.0, +3.0, +6.0) dB
Black level offset	1024 levels per output	1024 levels per output	1024 levels per output
Digital gain	1.0x to 3.0x (0.1x step)	1.0x to 3.0x (0.1x step)	1.0x to 3.0x (0.1x step)
Digital offset	-511 to + 511	-511 to + 511	-511 to + 511
Auto gain/exposure	Yes, with AOI	Yes, with AOI	Yes, with AOI
Area of interest	Eight Independent AOIs	Eight Independent AOIs	Eight Independent AOIs
User LUT	2 LUTs: Gamma, User LUT	2 LUTs: Gamma, User LUT	2 LUTs: Gamma, User LUT
Flat field correction	Yes, User FFC	Yes, User FFC	Yes, User FFC
Digital bit shift	7 bits, Left or Right	7 bits, Left or Right	7 bits, Left or Right
Hardware trigger	Asynchronous	Asynchronous	Asynchronous
Software trigger	Asynchronous, frame-grabber	Asynchronous, frame-grabber	Asynchronous, frame-grabber
Trigger modes	Standard, Double, Fast, Async, Frame integration	Standard, Double, Fast, Async, Frame integration	Standard, Double, Fast, Async, Frame integration
Trigger features	Rising/Falling edge, De-glitch, Delay, Strobe	Rising/Falling edge, De-glitch, Delay, Strobe	Rising/Falling edge, De-glitch, Delay, Strobe
Camera Image Memory	TBD-DSP up to 2G	TBD-DSP up to 2G	TBD-DSP up to 2G
Size (W x H x L) - CLM	(46x46x50) mm	(46x46x50) mm	(60x60x53.1) mm
Size (W x H x L) - CXP	TBD	TBD	TBD
Weight: CLM/CXP	352/TBD/g	337/TBD/g	353/TBD/TBD
Min. illumination	1.0 Lux, f=1.4	1.0 Lux, f=1.4	1.0 Lux, f=1.4
Lens Mount	C Mount,1.3" format CCD	C Mount,1.0" format CCD	C Mount,1.0" format CCD
Power: CLM/CXP	7.9/TBD/W	TBD/TBD/W	7.0/TBD/W

Table 1.1l – B2041, B2340, and B2740 Camera Specifications

Specifications	B3340	B3440	B4841
Active image resolution	3312/3296 (H) x 2488/2472 (V)	3388(H) x 2712(V)	4920/4896 (H) x 3280/3264 (V)
Active image area (H, V) mm	18.37/18.13(H) x 13.72/13.60(V), 22.6mm diagonal	12.50(H) x 10.00(V), 15.97mm diagonal	27.06/26.93(H) x 18.04/17.95(V), 32.36 diagonal
Pixel size	5.50 µm	3.69 µm	5.5 µm
Video output	Digital, 8/10/12 bit	Digital, 8/10/12 bit	Digital, 8/10/12 bit
Output structure	Quad	Quad	Quad
Data clock	40.000/50.000 MHz	40.000/50.000 MHz	30.000/40.000 MHz
Camera interface	Medium CL	Medium CL	Medium CL
PoCL	No	TBD	No
Nominal frame rate	17/21 fps	14/17	6.6/8.8 fps
Maximum frame rate	123 fps	85	55 fps
S/N ratio	60dB	60dB	60 dB
Shutter speed	1/125000 to1/2.5	1/125000 to1/2.5	1/125000 to 1/3
Line time	up to 200 us	up to 200 us	up to 200 us
Analog gain	0 to 36 dB per output	0 to 36 dB per output	0 to 36 dB per output
Gain resolution	0.035 dB/step, 1024 steps	0.035 dB/step, 1024 steps	0.035 dB/step, 1024 steps
Analog CDS gain	(-3.0, 0.0, +3.0, +6.0) dB	(-3.0, 0.0, +3.0, +6.0) dB	(-3.0, 0.0, +3.0, +6.0) dB
Black level offset	1024 levels per output	1024 levels per output	1024 levels per output
Digital gain	1.0x to 3.0x (0.1x step)	1.0x to 3.0x (0.1x step)	1.0x to 3.0x (0.1x step)
Digital offset	-511 to + 511	-511 to + 511	-511 to + 511
Auto gain/exposure	Yes, with AOI	Yes, with AOI	Yes, with AOI
Area of interest	Eight Independent AOIs	Eight Independent AOIs	Eight Independent AOIs
User LUT	2 LUTs: Gamma, User LUT	2 LUTs: Gamma, User LUT	2 LUTs: Gamma, User LUT
Flat field correction	Yes, User FFC	Yes, User FFC	Yes, User FFC
Digital bit shift	7 bits, Left or Right	7 bits, Left or Right	7 bits, Left or Right
Hardware trigger	Asynchronous	Asynchronous	Asynchronous
Software trigger	Asynchronous, frame-grabber	Asynchronous, frame-grabber	Asynchronous, frame-grabber
Trigger modes	Standard, Double, Fast, Async, Frame integration	Standard, Double, Fast, Async, Frame integration	Standard, Double, Fast, Async, Frame integration
Trigger features	Rising/Falling edge, De-glitch, Delay, Strobe	Rising/Falling edge, De-glitch, Delay, Strobe	Rising/Falling edge, De-glitch, Delay, Strobe
Camera Image Memory	TBD-DSP up to 2G	TBD-DSP up to 2G	TBD-DSP up to 2G
Size (W x H x L) - CLM	60x60x45 mm	60x60x53.1 mm	(60x60x53.1) mm
Size (W x H x L) - CXP	TBD	TBD	TBD
Weight: CLM/CXP	352/TBD/g	345/TBD/g	362/TBD/g
Min. illumination	1.0 Lux, f=1.4	1.0 Lux, f=1.4	1.0 Lux, f=1.4
Lens Mount	F mount,35mm format CCD	F mount,35mm format CCD	F mount,32.36mm format CCD
Power: CLM/CXP	8.4/TBD/W	7.2W/TBD/W	8.2/TBD/W

Table 1.1m– B3340, B3440, and B4841 Camera Specifications

Specifications	B4842	B6640
Active image resolution	4880 (H) x 3256 (V)	6600/6576 (H) x 4400/4384 (V)
Active image area (H, V) mm	36.11(H) x 24.09(V), 43.2 mm diagonal	36.30/36.17(H) X 24.20/24.11(V)
Pixel size	7.4 µm	5.50 µm
Video output	Digital, 8/10/12 bit	Digital, 8/10/12 bit
Output structure	Quad	Quad
Data clock	30.000/40.000 MHz	30.000/40.000 MHz
Camera interface	Medium CL	Medium CL
Nominal frame rate	5.9/7.9 fps	3.5/4.7 fps
Maximum frame rate	26 fps	20 fps
S/N ratio	60dB	60dB
Shutter speed	1/125000 to1/2.5	1/125000 to1/2.5
Line time	up to 200 us	up to 200 us
Analog gain	0 to 36 dB per output	0 to 36 dB per output
Gain resolution	0.035 dB/step, 1024 steps	0.035 dB/step, 1024 steps
Analog CDS gain	(-3.0, 0.0, +3.0, +6.0) dB	(-3.0, 0.0, +3.0, +6.0) dB
Black level offset	1024 levels per output	1024 levels per output
Digital gain	1.0x to 3.0x (0.1x step)	1.0x to 3.0x (0.1x step)
Digital offset	-511 to + 511	-511 to + 511
Auto gain/exposure	Yes, with AOI	Yes, with AOI
Area of interest	Eight Independent AOIs	Eight Independent AOIs
User LUT	2 LUTs: Gamma, User LUT	2 LUTs: Gamma, User LUT
Flat field correction	Yes, User FFC	Yes, User FFC
Digital bit shift	7 bits, Left or Right	7 bits, Left or Right
Hardware trigger	Asynchronous	Asynchronous
Software trigger	Asynchronous, frame-grabber	Asynchronous, frame-grabber
Trigger modes	Standard, Double, Fast, Async, Frame integration	Standard, Double, Fast, Async, Frame integration
Trigger features	Rising/Falling edge, De-glitch, Delay, Strobe	Rising/Falling edge, De-glitch, Delay, Strobe
Camera Image Memory	TBD-DSP up to 2G	TBD-DSP up to 2G
Size (W x H x L) - CLM	60x60x53.1 mm	60x60x53.1 mm
Size (W x H x L) - CXP	TBD	TBD
Weight: CLM/CXP	369/TBD/g	356/TBD/g
Min. illumination	1.0 Lux, f=1.4	1.0 Lux, f=1.4
Lens Mount	F mount,35mm format CCD	F mount,35mm format CCD
Power: CLM/CXP	8.7/TBD/W	8.7/TBD/W

Table 1.1n – B4842, B6640 Camera Specifications

1.3 CAMERA CONNECTIVITY

1.3.1 CLB (Base) - Camera Link (CL) Output

The interface between the BOBCAT-CLB cameras and outside equipment is done via 4 connectors and one LED, located on the back panel of the camera – Figure 1.4.

1. One Camera outputs – standard Base Camera Link Mini provides data, sync, control, serial interface and PoCL power.
2. Male 12-pin Power Connector – provides power and I/O interface.
3. Female 12-pin I/O interface with Lens Control outputs
4. USB type B programming/SPI connector.
5. Status LED – indicates the status of the camera – refer to Status LED section.
6. Serial Number – shows camera model and serial number.



Figure 1.4 – CLB Camera back panel – Base Camera Link output

The Camera's video data output is compliant with Base Camera Link standard and includes 12VDC Power over camera Link (PoCL), 4 W max, 24 data bits, 4 sync signals (LVAL, FVAL, DVAL and User Out), 1 reference clock, 2 external inputs CC1, CC2 and a bi-directional serial interface. The camera link output connector is shown in Figure 1.4a, and the corresponding signal mapping in Table 1.4a.

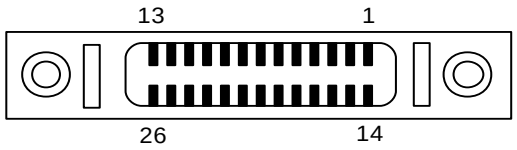

Figure 1.4a – CLB Camera output connector

Cable Name	Pin	CL Signal	Type	Description
Base Wire	**1**	12 VDC Power	Power	PoCL Power Base
Base Wire	**14**	Power Return	Ground	PoCL Ground
- PAIR 1	**2**	- X 0	LVDS - Out	Camera Link Channel Tx
+ PAIR 1	**15**	+ X 0	LVDS - Out	Camera Link Channel Tx
- PAIR 2	**3**	- X 1	LVDS - Out	Camera Link Channel Tx
+ PAIR 2	**16**	+ X 1	LVDS - Out	Camera Link Channel Tx
- PAIR 3	**4**	- X 2	LVDS - Out	Camera Link Channel Tx
+ PAIR 3	**17**	+ X 2	LVDS - Out	Camera Link Channel Tx
- PAIR 4	**5**	- X CLK	LVDS - Out	Camera Link Clock Tx
+ PAIR 4	**18**	+ X CLK	LVDS - Out	Camera Link Clock Tx
- PAIR 5	**6**	- X 3	LVDS - Out	Camera Link Channel Tx
+ PAIR 5	**19**	+ X 3	LVDS - Out	Camera Link Channel Tx
+ PAIR 6	**7**	+ SerTC	LVDS - In	Serial Data Receiver
- PAIR 6	**20**	- SerTC	LVDS - In	Serial Data Receiver
- PAIR 7	**8**	- SerTFG	LVDS - Out	Serial Data Transmitter
+ PAIR 7	**21**	+ SerTFG	LVDS - Out	Serial Data Transmitter
- PAIR 8	**9**	- CC 1	LVDS - In	User Selectable Input
+ PAIR 8	**22**	+ CC 1	LVDS - In	User Selectable Input
+ PAIR 9	**10**	+ CC2	LVDS - In	User Selectable Input
- PAIR 9	**23**	- CC2	LVDS - In	User Selectable Input
- PAIR 10	**11**	N/C	N/C	N/C
+ PAIR 10	**24**	N/C	N/C	N/C
+ PAIR 11	**12**	N/C	N/C	N/C
- PAIR 11	**25**	N/C	N/C	N/C
Base Wire	**13**	Power Return	Ground	PoCL Ground
Base Wire	**26**	12 VDC Power	Power	PoCL Power Base

Table 1.4a – CLB Camera Output Connector – Signal Mapping

The bit assignment corresponding to the Base Configuration is shown in the following table 1.4b.

Port	Port/bit	8-bits Tap 1, 2	10-bits Tap 1, 2	12-bits Tap 1, 2	14-bits Tap 1
DATA 0	Port A0	A0	A0	A0	A0
DATA 1	Port A1	A1	A1	A1	A1
DATA 2	Port A2	A2	A2	A2	A2
DATA 3	Port A3	A3	A3	A3	A3
DATA 4	Port A4	A4	A4	A4	A4
DATA 5	Port A5	A5	A5	A5	A5
DATA 6	Port A6	A6	A6	A6	A6
DATA 7	Port A7	A7	A7	A7	A7
DATA 8	Port B0	B0	A8	A8	A8
DATA 9	Port B1	B1	A9	A9	A9
DATA 10	Port B2	B2	N/C	A10	A10
DATA 11	Port B3	B3	N/C	A11	A11
DATA 12	Port B4	B4	B8	B8	A12
DATA 13	Port B5	B5	B9	B9	A13
DATA 14	Port B6	B6	N/C	B10	N/C
DATA 15	Port B7	B7	N/C	B11	N/C
DATA 16	Port C0	N/C	B0	B0	N/C
DATA 17	Port C1	N/C	B1	B1	N/C
DATA 18	Port C2	N/C	B2	B2	N/C
DATA 19	Port C3	N/C	B3	B3	N/C
DATA 20	Port C4	N/C	B4	B4	N/C
DATA 21	Port C5	N/C	B5	B5	N/C
DATA 22	Port C6	N/C	B6	B6	N/C
DATA 23	Port C7	N/C	B7	B7	N/C
ENABLE 0	LVAL	LVAL	LVAL	LVAL	LVAL
ENABLE 1	FVAL	FVAL	FVAL	FVAL	FVAL
ENABLE 2	DVAL	DVAL	DVAL	DVAL	DVAL
ENABLE 3	User Out	User Out	User Out	User Out	User Out
CONTROL 0	CC 1	CC 1	CC 1	CC 1	CC 1
CONTROL 1	CC 2	CC 2	CC 2	CC 2	CC 2
CONTROL 2	N/C	N/C	N/C	N/C	N/C
CONTROL 3	N/C	N/C	N/C	N/C	N/C

Table 1.4b – Base Camera Link bit assignment

The male 12-pin Hirose connector provides power and all external input/output signals supplied to the camera. Refer to Fig 1.4b for connector pin-outs. Refer to Table 1.4c for corresponding pin mapping. The connector is a male HIROSE type miniature locking receptacle #HR10A-10R-12PB(71). The power supply is shipped with a power cable which terminates in a female HIROSE plug #HR10A-10P-12S(73), and has two small BNC pig-tail cables for the external trigger input (black) and strobe output (white). The corresponding BNC connector pin mapping is shown on Table 1.4d.

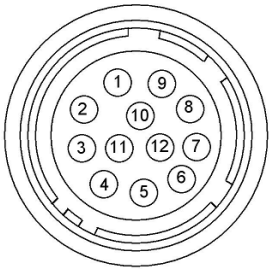

Figure 1.4b – CLB Camera Power Connector
(Viewed from rear)

Pin	Signal	Type	Description
1	12 VDC Return	Ground Return	12 VDC Main Power Return
2	+ 12 VDC	Power - Input	+ 12 VDC Main Power
3	IRIS VCC	Power - Input	12 V Iris Power
4	IRIS Video	Analog Output	Iris Video Output
5	IRIS Return	Ground Return	12 VDC Iris Power Return
6	GP OUT Return	Ground Return	General Purpose Outputs Return
7	GP OUT 1	TTL OUT 1	General Purpose Output 1
8	GP IN 1	TTL/LVTTL IN 1	General Purpose Input 1
9	GP IN 2	TTL/LVTTL IN 2	General Purpose Input 2
10	GP IN Return	Ground Return	General Purpose Inputs Return
11	GPIO	LVTTL IN/OUT	Reserved for custom GPIO
12	GP OUT 2	TTL OUT 2	General Purpose Output 2

Table 1.4c – CLB Camera Power Connector Pin Mapping

Pin	Signal	Cable color	Description
Case	In 1 Return	BNC Black	User Selectable Input 1 Return
Signal	In 1 Active		User Selectable Input 1 Signal
Case	Out 1 Return	BNC White	User Selectable Out 1 Return
Signal	Out 1 Active		User Selectable Out 1 Signal

Table 1.4d – CLB BNC Connectors Pin Mapping

The female 12-pin HIROSE connector provides Camera Control via an RS232 serial interface, and outputs Lens Control signals for Zoom, Focus, and Iris for a standard Type 1 (6V) or Type 5 (12V) C-Mount motorized lens. Refer to Fig 1.4c for connector pin-outs. Refer to Table 1.4c for corresponding pin mapping. The connector is a female HIROSE type miniature locking receptacle #HR10A-10R-12SB(71). The male HIROSE mating plug part number is #HR10A-10R-12P(73).

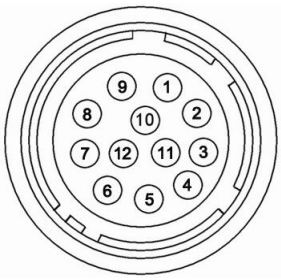

Figure 1.4c – CLB Camera Serial/Lens Control Pin-Outs
(Viewed from rear)

Pin	Signal	Type	Description
1	IRIS Return	Ground Return	+ 12 VDC Main Power Return
2	IRIS VCC	Power Input	+ 12 VDC Main Power
3	IRIS Video	Analog Output	IRIS Video Output
4	IRIS(1)	Iris Closes	DC -
5	IRIS(2)	Iris Opens	DC +
6	FOCUS(1)	Focus Near	DC -
7	FOCUS(2)	Focus Far	DC +

8	ZOOM(1)	Zoom Wide	DC -
9	ZOOM(2)	Zoom Narrow	DC +
10	AUX UART COM	Ground Return	RS-232 Ground Return
11	AUX UART RX	Receive	RS-232 RX
12	AUX UART TX	Transmit	RS-232 TX

Table 1.4c – CLB Serial/Lens Control Pin Mapping

1.3.2 CLM (Medium) - Camera Link (CL) Output

The interface between the BOBCAT-CLM cameras and outside equipment is done via 5 connectors and one LED, located on the back panel of the camera – Figure 1.5.

1. Two Camera outputs – standard Medium Camera Link Mini provides data, sync, control, serial interface and PoCL power.
2. Male 12-pin Power Connector – provides power and I/O interface.
3. Female 12-pin I/O interface with Lens Control outputs
4. USB type B programming/SPI connector.
5. Status LED – indicates the status of the camera – refer to Status LED section.
6. Serial Number – shows camera model and serial number.



Figure 1.5 – CLM Camera back panel – Medium Camera Link output

The Camera's video data output is compliant with Medium Camera Link standard and includes 12VDC Power over camera Link (PoCL), 4 W max per output, 24 data bits, 4 sync signals (LVAL, FVAL, DVAL and User Out), 1 reference clock, 2 external inputs CC1, CC2 and a bi-directional serial interface. The camera link output connectors are shown in Figure 1.5a, and 1.5b, and the corresponding signal mapping in Table 1.5a, and 1.5b.

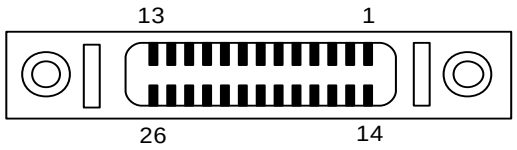

Figure 1.5a – CLM Camera output connector 1

Cable Name	Pin	CL Signal	Type	Description
Base Wire	**1**	12 VDC Power	Power	PoCL Power Base
Base Wire	**14**	Power Return	Ground	PoCL Ground
- PAIR 1	**2**	- X 0	LVDS - Out	Camera Link Channel Tx
+ PAIR 1	**15**	+ X 0	LVDS - Out	Camera Link Channel Tx
- PAIR 2	**3**	- X 1	LVDS - Out	Camera Link Channel Tx
+ PAIR 2	**16**	+ X 1	LVDS - Out	Camera Link Channel Tx
- PAIR 3	**4**	- X 2	LVDS - Out	Camera Link Channel Tx
+ PAIR 3	**17**	+ X 2	LVDS - Out	Camera Link Channel Tx
- PAIR 4	**5**	- X CLK	LVDS - Out	Camera Link Clock Tx
+ PAIR 4	**18**	+ X CLK	LVDS - Out	Camera Link Clock Tx
- PAIR 5	**6**	- X 3	LVDS - Out	Camera Link Channel Tx
+ PAIR 5	**19**	+ X 3	LVDS - Out	Camera Link Channel Tx
+ PAIR 6	**7**	+ SerTC	LVDS - In	Serial Data Receiver
- PAIR 6	**20**	- SerTC	LVDS - In	Serial Data Receiver
- PAIR 7	**8**	- SerTFG	LVDS - Out	Serial Data Transmitter
+ PAIR 7	**21**	+ SerTFG	LVDS - Out	Serial Data Transmitter
- PAIR 8	**9**	- CC 1	LVDS - In	User Selectable Input
+ PAIR 8	**22**	+ CC 1	LVDS - In	User Selectable Input
+ PAIR 9	**10**	+ CC2	LVDS - In	User Selectable Input
- PAIR 9	**23**	- CC2	LVDS - In	User Selectable Input
- PAIR 10	**11**	N/C	N/C	N/C
+ PAIR 10	**24**	N/C	N/C	N/C
+ PAIR 11	**12**	N/C	N/C	N/C
- PAIR 11	**25**	N/C	N/C	N/C
Base Wire	**13**	Power Return	Ground	PoCL Ground
Base Wire	**26**	12 VDC Power	Power	PoCL Power Base

Table 1.5a – CLM Base Camera Output Connector 1 – Signal Mapping

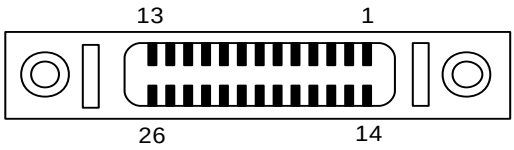

Figure 1.5b – CLM Camera output connector 2

Cable Name	Pin	CL Signal	Type	Description
Medium Wire	1	12 VDC Power	Power	PoCL Power Medium
Medium Wire	14	Power Return	Ground	PoCL Ground
- PAIR 1	2	- Y 0	LVDS - Out	Camera Link Channel Tx
+ PAIR 1	15	+ Y 0	LVDS - Out	Camera Link Channel Tx
- PAIR 2	3	- Y 1	LVDS - Out	Camera Link Channel Tx
+ PAIR 2	16	+ Y 1	LVDS - Out	Camera Link Channel Tx
- PAIR 3	4	- Y 2	LVDS - Out	Camera Link Channel Tx
+ PAIR 3	17	+ Y 2	LVDS - Out	Camera Link Channel Tx
- PAIR 4	5	- Y CLK	LVDS - Out	Camera Link Clock Tx
+ PAIR 4	18	+ Y CLK	LVDS - Out	Camera Link Clock Tx
- PAIR 5	6	- Y 3	LVDS - Out	Camera Link Channel Tx
+ PAIR 5	19	+ Y 3	LVDS - Out	Camera Link Channel Tx
+ PAIR 6	7	+ Ser_BP	LVDS - In	Serial Data Receiver
- PAIR 6	20	- Ser_BP	LVDS - In	Serial Data Receiver
- PAIR 7	8	N/C	N/C	N/C
+ PAIR 7	21	N/C	N/C	N/C
- PAIR 8	9	N/C	N/C	N/C
+ PAIR 8	22	N/C	N/C	N/C
+ PAIR 9	10	N/C	N/C	N/C
- PAIR 9	23	N/C	N/C	N/C
- PAIR 10	11	N/C	N/C	N/C
+ PAIR 10	24	N/C	N/C	N/C
+ PAIR 11	12	N/C	N/C	N/C
- PAIR 11	25	N/C	N/C	N/C
Medium Wire	13	Power Return	Ground	PoCL Ground
Medium Wire	26	12 VDC Power	Power	PoCL Power Medium

Table 1.5b – CLM Medium Camera Output Connector 2 – Signal Mapping

The bit assignment corresponding to the medium configuration is shown in the following table 1.5c.

Port	Port/bit	8-bits Tap 1, 2	10-bits Tap 1, 2	12-bits Tap 1, 2
DATA 0	Port A0	A0	A0	A0
DATA 1	Port A1	A1	A1	A1
DATA 2	Port A2	A2	A2	A2
DATA 3	Port A3	A3	A3	A3
DATA 4	Port A4	A4	A4	A4
DATA 5	Port A5	A5	A5	A5
DATA 6	Port A6	A6	A6	A6
DATA 7	Port A7	A7	A7	A7
DATA 8	Port B0	B0	A8	A8
DATA 9	Port B1	B1	A9	A9
DATA 10	Port B2	B2	N/C	A10
DATA 11	Port B3	B3	N/C	A11
DATA 12	Port B4	B4	B8	B8
DATA 13	Port B5	B5	B9	B9
DATA 14	Port B6	B6	N/C	B10
DATA 15	Port B7	B7	N/C	B11
DATA 16	Port C0	N/C	B0	B0
DATA 17	Port C1	N/C	B1	B1
DATA 18	Port C2	N/C	B2	B2
DATA 19	Port C3	N/C	B3	B3
DATA 20	Port C4	N/C	B4	B4
DATA 21	Port C5	N/C	B5	B5
DATA 22	Port C6	N/C	B6	B6
DATA 23	Port C7	N/C	B7	B7
DATA 24	Port D0	D0	D0	D0
DATA 25	Port D1	D1	D1	D1
DATA 26	Port D2	D2	D2	D2
DATA 27	Port D3	D3	D3	D3
DATA 28	Port D4	D4	D4	D4
DATA 29	Port D5	D5	D5	D5
DATA 30	Port D6	D6	D6	D6
DATA 31	Port D7	D7	D7	D7
DATA 32	Port E0	N/C	C0	C0
DATA 33	Port E1	N/C	C1	C1
DATA 34	Port E2	N/C	C2	C2
DATA 35	Port E3	N/C	C3	C3
DATA 36	Port E4	N/C	C4	C4
DATA 37	Port E5	N/C	C5	C5

Port	Port/bit	8-bits Tap 1, 2	10-bits Tap 1, 2	12-bits Tap 1, 2
DATA 38	Port E6	N/C	C6	C6
DATA 39	Port E7	N/C	C7	C7
DATA 40	Port F0	N/C	C8	C8
DATA 41	Port F1	N/C	C9	C9
DATA 42	Port F2	N/C	N/C	C10
DATA 43	Port F3	N/C	N/C	C11
DATA 44	Port F4	N/C	D8	D8
DATA 45	Port F5	N/C	D9	D9
DATA 46	Port F6	N/C	N/C	F10
DATA 47	Port F7	N/C	N/C	D11
ENABLE 0	LVAL	LVAL	LVAL	LVAL
ENABLE 1	FVAL	FVAL	FVAL	FVAL
ENABLE 2	DVAL	DVAL	DVAL	DVAL
ENABLE 3	User Out	User Out	User Out	User Out
CONTROL 0	CC 1	CC 1	CC 1	CC 1
CONTROL 1	CC 2	CC 2	CC 2	CC 2
CONTROL 2	N/C	N/C	N/C	N/C
CONTROL 3	N/C	N/C	N/C	N/C

Table 1.5c – Medium Camera Link bit assignment

The power and all external input/output signals are supplied to the camera via the camera power connector shown in Figure 1.5c. The corresponding pin mapping is shown in Table 1.5d. The connector is a male HIROSE type miniature locking receptacle #HR10A-10R-12PB(71).

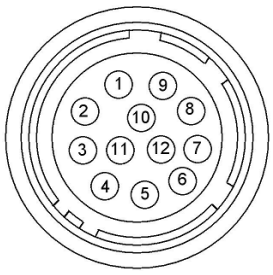

Figure 1.5c – CLB Camera Power Connector
(Viewed from rear)

Pin	Signal	Type	Description
1	12 VDC Return	Ground Return	12 VDC Main Power Return
2	+ 12 VDC	Power - Input	+ 12 VDC Main Power
3	IRIS VCC	Power - Input	12 V Iris Power
4	IRIS Video	Analog Output	Iris Video Output
5	IRIS Return	Ground Return	12 VDC Iris Power Return
6	GP OUT Return	Ground Return	General Purpose Outputs Return
7	GP OUT 1	TTL OUT 1	General Purpose Output 1
8	GP IN 1	TTL/LVTTL IN 1	General Purpose Input 1
9	GP IN 2	TTL/LVTTL IN 2	General Purpose Input 2
10	GP IN Return	Ground Return	General Purpose Inputs Return
11	GPIO	LVTTL IN/OUT	Reserved for custom GPIO
12	GP OUT 2	TTL OUT 2	General Purpose Output 2

Table 1.5d – CLM Camera Power Connector Pin Mapping

The female 12-pin HIROSE connector provides Camera Control via an RS232 serial interface and outputs Lens Control signals for Zoom, Focus, and Iris for a standard Type 1 (6V) or Type 5 (12V) C-Mount motorized lens. Refer to Fig 1.5e for connector pin-outs. Refer to Table 1.5e for corresponding pin mapping. The connector is a female HIROSE type miniature locking receptacle #HR10A-10R-12SB(71). The male HIROSE mating plug part number is #HR10A-10R-12P(73).

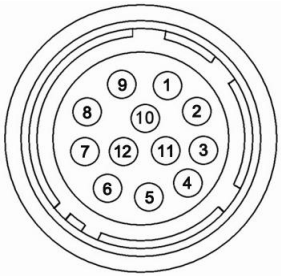

Figure 1.5d – CLM Camera Serial/Lens Control Pin-Outs
(Viewed from rear)

Pin	Signal	Type	Description
1	IRIS Return	Ground Return	+ 12 VDC Main Power Return
2	IRIS VCC	Power Input	+ 12 VDC Main Power
3	IRIS Video	Analog Output	IRIS Video Output
4	IRIS(1)	Iris Closes	DC -

5	IRIS(2)	Iris Opens	DC +
6	FOCUS(1)	Focus Near	DC -
7	FOCUS(2)	Focus Far	DC +
8	ZOOM(1)	Zoom Wide	DC -
9	ZOOM(2)	Zoom Narrow	DC +
10	AUX UART COM	Ground Return	RS-232 Ground Return
11	AUX UART RX	Receive	RS-232 RX
12	AUX UART TX	Transmit	RS-232 TX

Table 1.5e – CLM Serial/Lens Control Pin Mapping

1.3.3 GigE (GEV) Camera Output

The interface between the GEV camera and outside equipment is done via 3 connectors and one LED, located on the back panel of the camera – Figure 1.6.

1. Camera output – standard RJ-45 provides data, sync, control, and serial interface.
2. Male 12-pin Power Connector – provides power and I/O interface.
3. Female 12-pin Connector – provides RS232 serial control interface, Lens Control signals for Zoom, Focus, and Iris for a standard Type 1 (6V) or Type 5 (12V) C-Mount motorized lens.
4. USB type B programming/SPI connector.
5. Status LED – indicates the status of the camera – refer to Status LED ion.
6. Serial Number – shows camera model and serial number.



Figure 1.6 – GEV Camera back panel – GigE output

The Camera's video data output along with the serial communication and triggering signals are serialized and continuously transmitted over the Gigabit Ethernet interface at GigE's full 1-Gb/s line rate, while delivering consistently low, predictable latencies. The network interface is compatible with IP/Ethernet networks operating at 1000 Mb/s using standard LAN CAT-5 (CAT-5e) cables.

The male 12-pin Hirose connector provides power and all external input/output signals supplied to the camera. Refer to Fig 1.6a for connector pin-outs. Refer to Table 1.6a for corresponding pin mapping. The connector is a male HIROSE type miniature locking receptacle #HR10A-10R-12PB(71). The power supply is shipped with a power cable which terminates in a female HIROSE plug #HR10A-10P-12S(73), and has two small BNC pig-tail cables for the external trigger input (black)

and strobe output (white). The corresponding BNC connector pin mapping is shown on Table 1.6b.

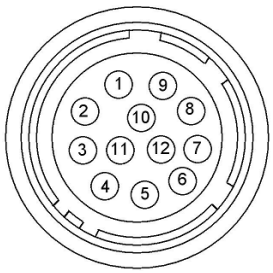

Figure 1.6a – GEV Camera Power Connector Pin-Outs
(Viewed from rear)

Pin	Signal	Type	Description
1	12 VDC Return	Ground Return	12 VDC Main Power Return
2	+ 12 VDC	Power - Input	+ 12 VDC Main Power
3	IRIS VCC	Power - Input	12 V Iris Power
4	IRIS Video	Analog Output	Iris Video Output
5	IRIS Return	Ground Return	12 VDC Iris Power Return
6	GP OUT Return	Ground Return	General Purpose Outputs Return
7	GP OUT 1	TTL OUT 1	General Purpose Output 1
8	GP IN 1	TTL/LVTTL IN 1	General Purpose Input 1
9	GP IN 2	TTL/LVTTL IN 2	General Purpose Input 2
10	GP IN Return	Ground Return	General Purpose Inputs Return
11	GPIO	LVTTL IN/OUT	Reserved for custom GPIO
12	GP OUT 2	TTL OUT 2	General Purpose Output 2

Table 1.6a – GEV Camera Power Connector Pin Mapping

Pin	Signal	Cable color	Description
Case	In 1 Return	BNC Black	User Selectable Input 1 Return
Signal	In 1 Active		User Selectable Input 1 Signal
Case	Out 1 Return	BNC White	User Selectable Out 1 Return
Signal	Out 1 Active		User Selectable Out 1 Signal

Table 1.6b – GEV BNC Connectors Pin Mapping

The female 12-pin HIROSE connector provides Camera Control via an RS232 serial interface and outputs Lens Control signals for Zoom, Focus, and Iris for a standard Type 1 (6V) or Type 5 (12V) C-Mount motorized lens. Refer to Fig 1.6b for connector pin-outs. Refer to Table 1.6c for corresponding pin mapping. The connector is a female HIROSE type miniature locking receptacle #HR10A-10R-12SB(71). The male HIROSE mating plug part number is #HR10A-10R-12P(73).

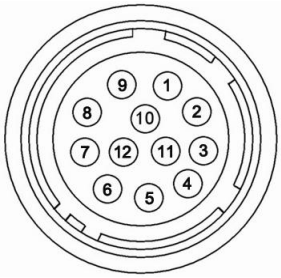

Figure 1.6b – GEV Camera Serial/Lens Control Pin-Outs
(Viewed from rear)

Pin	Signal	Type	Description
1	IRIS Return	Ground Return	+ 12 VDC Main Power Return
2	IRIS VCC	Power Input	+ 12 VDC Main Power
3	IRIS Video	Analog Output	IRIS Video Output
4	IRIS(1)	Iris Closes	DC -
5	IRIS(2)	Iris Opens	DC +
6	FOCUS(1)	Focus Near	DC -
7	FOCUS(2)	Focus Far	DC +
8	ZOOM(1)	Zoom Wide	DC -
9	ZOOM(2)	Zoom Narrow	DC +
10	AUX UART COM	Ground Return	RS-232 Ground Return
11	AUX UART RX	Receive	RS-232 RX
12	AUX UART TX	Transmit	RS-232 TX

Table 1.6c – GEV Serial/Lens Control Pin Mapping

1.3.4 CoaXPress (CXP) Camera Output

The interface between the BOBCAT CXP camera and outside equipment is done via 3 connectors and one LED, located on the back panel of the camera – Figure 1.7.

1. Camera output – standard BNC provides data, control data, general purpose I/O.
2. Male 12-pin – provides IRIS, and I/O interface.
3. Female 12-pin – provides IRIS, I/O interface with Lens Control outputs.
4. USB type B programming/SPI connector.
5. Status LED – indicates the status of the camera – refer to Status LED section.
6. Serial Number – shows camera model and serial number.



Figure 1.7 – CXP Camera back panel – CoaXPress Output

The Camera's video data output, control data, triggering, and general I/Os are serialized and continuously transmitted over CoaXPress (CXP) using a single standard BNC 75-ohm coaxial cable. The interface provides a high-speed downlink of up to 6.25 Gbps for video transport plus lower speed 20Mbps uplink for communication and control. Power is also available over the cable and cable lengths of greater than 100 meters may be achieved.

The male 12-pin Hirose connector provides external input/output signals supplied to the camera. Refer to Fig 1.7a for connector pin-outs. Refer to Table 1.7a for corresponding pin mapping. The connector is a male HIROSE type miniature locking receptacle #HR10A-10R-12PB(71). The power supply is shipped with a power cable which terminates in a female HIROSE plug #HR10A-10P-12S(73), and has two small BNC pig-tail cables for the external trigger input (black) and strobe output (white). The corresponding BNC connector pin mapping is shown on Table 1.7b.

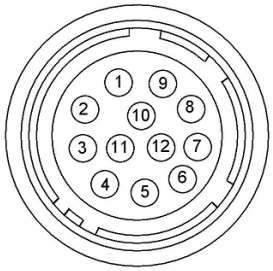

Figure 1.7a – CXP Camera Power Connector Pin-Outs
(Viewed from rear)

Pin	Signal	Type	Description
1	N/C		12 VDC Main Power Return
2	N/C		+ 12 VDC Main Power
3	IRIS VCC	Power - Input	12 V Iris Power
4	IRIS Video	Analog Output	Iris Video Output
5	IRIS Return	Ground Return	12 VDC Iris Power Return
6	GP OUT Return	Ground Return	General Purpose Outputs Return
7	GP OUT 1	TTL OUT 1	General Purpose Output 1
8	GP IN 1	TTL/LVTTL IN 1	General Purpose Input 1
9	GP IN 2	TTL/LVTTL IN 2	General Purpose Input 2
10	GP IN Return	Ground Return	General Purpose Inputs Return
11	GPIO	LVTTL IN/OUT	Reserved for custom GPIO
12	GP OUT 2	TTL OUT 2	General Purpose Output 2

Table 1.7a – CXP Camera Power Connector Pin Mapping

Pin	Signal	Cable color	Description
Case	In 1 Return	BNC Black	User Selectable Input 1 Return
Signal	In 1 Active		User Selectable Input 1 Signal
Case	Out 1 Return	BNC White	User Selectable Out 1 Return
Signal	Out 1 Active		User Selectable Out 1 Signal

Table 1.7b – CXP BNC Pig-Tale Connector Pin Mapping

The female 12-pin HIROSE connector provides Camera Control via an RS232 serial interface and outputs Lens Control signals for Zoom, Focus, and Iris for a standard Type 1 (6V) or Type 5 (12V) C-Mount motorized lens. Refer to Fig 1.7b for connector pin-outs. Refer to Table 1.7c for corresponding pin mapping. The connector is a female HIROSE type miniature locking receptacle #HR10A-10R-12SB(71). The male HIROSE mating plug part number is #HR10A-10R-12P(73).

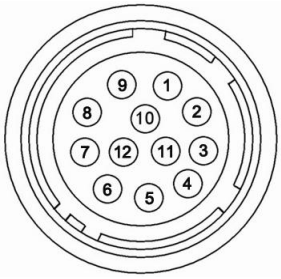

Figure 1.7b – CXP Camera Serial/Lens Control Pin-Outs
(Viewed from rear)

Pin	Signal	Type	Description
1	IRIS Return	Ground Return	+ 12 VDC Main Power Return
2	IRIS VCC	Power Input	+ 12 VDC Main Power
3	IRIS Video	Analog Output	IRIS Video Output
4	IRIS(1)	Iris Closes	DC -
5	IRIS(2)	Iris Opens	DC +
6	FOCUS(1)	Focus Near	DC -
7	FOCUS(2)	Focus Far	DC +
8	ZOOM(1)	Zoom Wide	DC -
9	ZOOM(2)	Zoom Narrow	DC +
10	AUX UART COM	Ground Return	RS-232 Ground Return
11	AUX UART RX	Receive	RS-232 RX
12	AUX UART TX	Transmit	RS-232 TX

Table 1.7c – CXP Camera Serial/Lens Control Pin Mapping

1.3.5 Power Supply

The camera Link version of the camera is compatible with power over camera Link – PoCL, with a maximum power of 4 W.

If PoCL is not available, a universal desktop power supply adapter, providing +12 VDC, ± 10%, and up to 2.5A constant DC current, is available (for additional price) from IMPERX for the BOBCAT cameras. The operating input voltage ranges from 90 to 240 VAC.

CAUTION NOTE

1. It is strongly recommended that you do not use an adapter other than the one that is available from IMPERX for the camera!
2. The PoCL current is limited to 333 mA. The cameras are PoCL compatible in normal camera operation – free running with full image. In some modes such as vertical binning x4 and x8 and in AOI (with keep frame rate disabled), when the vertical height is less than 100 lines, the camera current can exceed 333 mA.

1.4 MECHANICAL, OPTICAL, and ENVIRONMENTAL

1.4.1 Mechanical

The camera housing is manufactured using high quality 6000 series aluminum alloy. For maximum flexibility, the camera has twelve (12) M3X0.5mm mounting screws, located towards the front and the back. An additional plate with ¼-20 UNC (tripod mount) and hardware is shipped with each camera. Mechanical drawings for C and F-Mount Camera Link output cameras are found in Figures 1.9a to 1.9k. Mechanicals drawings for C and F-Mount GigE Vision (GEV) output cameras are found in Figures 1.10a to 1.10g. Mechanicals drawings for C and F-Mount PoE GigE Vision (GEV) output cameras are found in Figures 1.11a to 1.11g. Mechanicals drawings for C and F-Mount CoaXPress (CXP) output cameras are found in Figures 1.12a to 1.12g. All dimensions are in millimeters.

External heat sink dimensional drawings for CLB-B3340, and CLB-B6640 is shown in Fig. 1.9l

1.4.2 Optical

The smaller body BOBCAT cameras (46 x 46) mm cross-section come with an adapter for C-mount lenses, which have a 17.53 mm back focal distance. An F-mount lens can be used with a C-mount camera via an F-mount to C-mount adapter, which can be purchased separately – refer to the IMPERX web site for more information. The bigger body BOBCAT cameras (60 x 60) mm cross-section come with an adapter for F-mount lenses, which have a 46.50 mm back focal distance. Focal distance and optical plan position for all C and F-mount camera are found in Figures 1.8a to 1.8z.

The camera performance and signal to noise ratio depends on the illumination (amount of light) reaching the sensor and the exposure time. Always try to balance these two factors. Unnecessarily long exposure will increase the amount of noise and thus decrease the signal to noise ratio.

The cameras are very sensitive in the IR spectral region. All color cameras have and IR cut-off filter installed. The monochrome cameras are without IR filter. If necessary, an IR filter (1 mm thickness or less) can be inserted under the front lens bezel.

CAUTION NOTE

1. Avoid direct exposure to a high intensity light source (such as a laser beam). This may damage the camera optical sensor!

2. Avoid foreign particles on the surface of the imager.

1.4.3 Environmental

The camera is designed to operate from -40^0 to 80^0 C in a dry environment. The relative humidity should not exceed 80% non-condensing. Always keep the camera as cool as possible. Always allow sufficient time for temperature equalization, if the camera was kept below 0^0 C!

The camera should be stored in a dry environment with the temperature ranging from -50^0 to $+ 90^0$ C.

CAUTION NOTE

1. Avoid direct exposure to moisture and liquids. The camera housing is not hermetically sealed and any exposure to liquids may damage the camera electronics!
2. Avoid operating in an environment without any air circulation, in close proximity to an intensive heat source, strong magnetic or electric fields.
3. Avoid touching or cleaning the front surface of the optical sensor. If the sensor needs to be cleaned, use soft lint free cloth and an optical cleaning fluid. Do not use methylated alcohol! Please refer to the Sensor and Filter Cleaning Procedure document found in the camera's information CD or USB stick.

C – Mount Camera Link (CL) Output

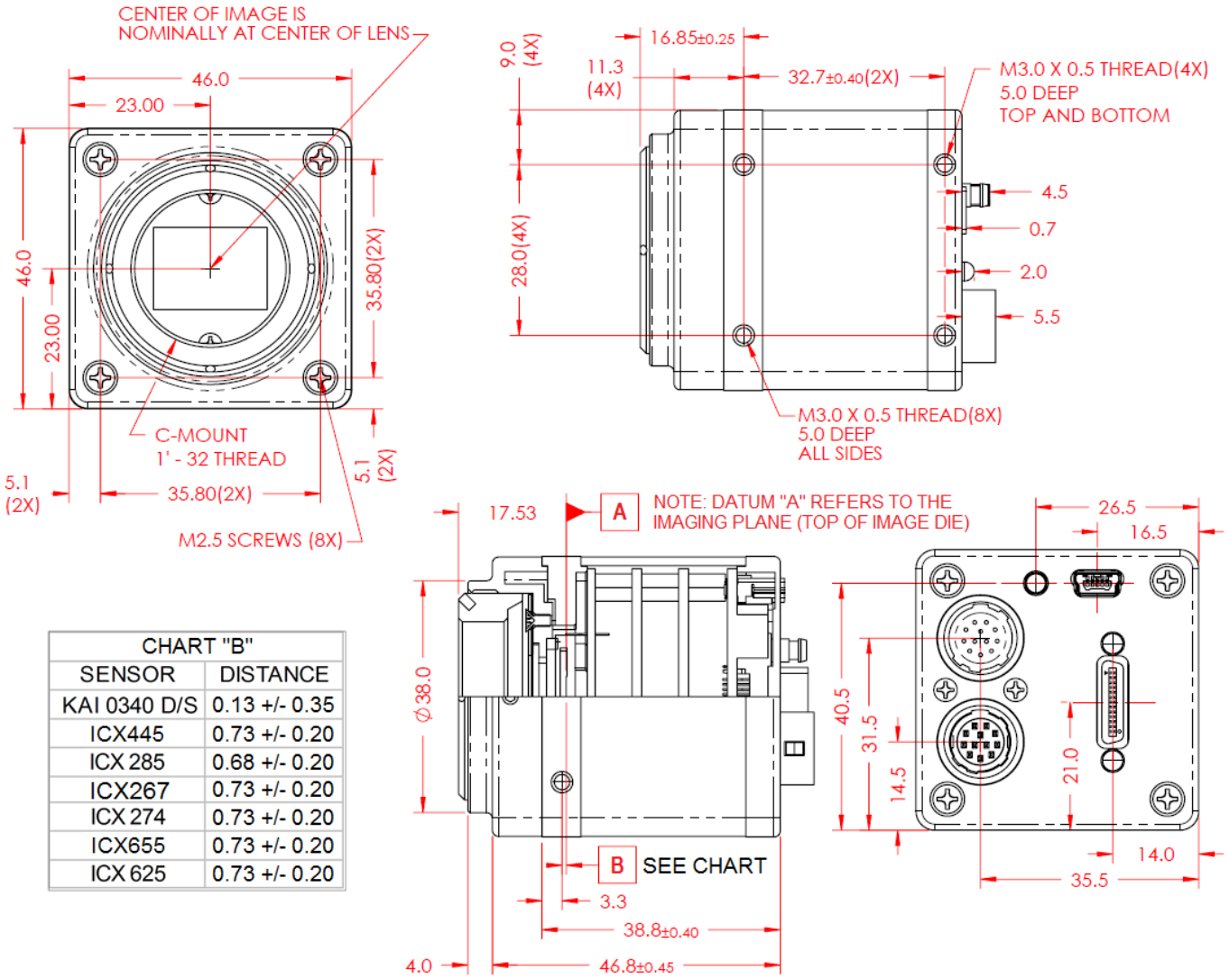

CHART "B"	
SENSOR	DISTANCE
KAI 0340 D/S	0.13 +/- 0.35
ICX445	0.73 +/- 0.20
ICX 285	0.68 +/- 0.20
ICX267	0.73 +/- 0.20
ICX 274	0.73 +/- 0.20
ICX655	0.73 +/- 0.20
ICX 625	0.73 +/- 0.20

Figure 1.9a – C-mount Camera Link Output – Dimensional Drawings for CLB-B0610, B0620, B1310, B1410, B1411, B1610, B2510, and B2520.

C – Mount Camera Link (CL) Output

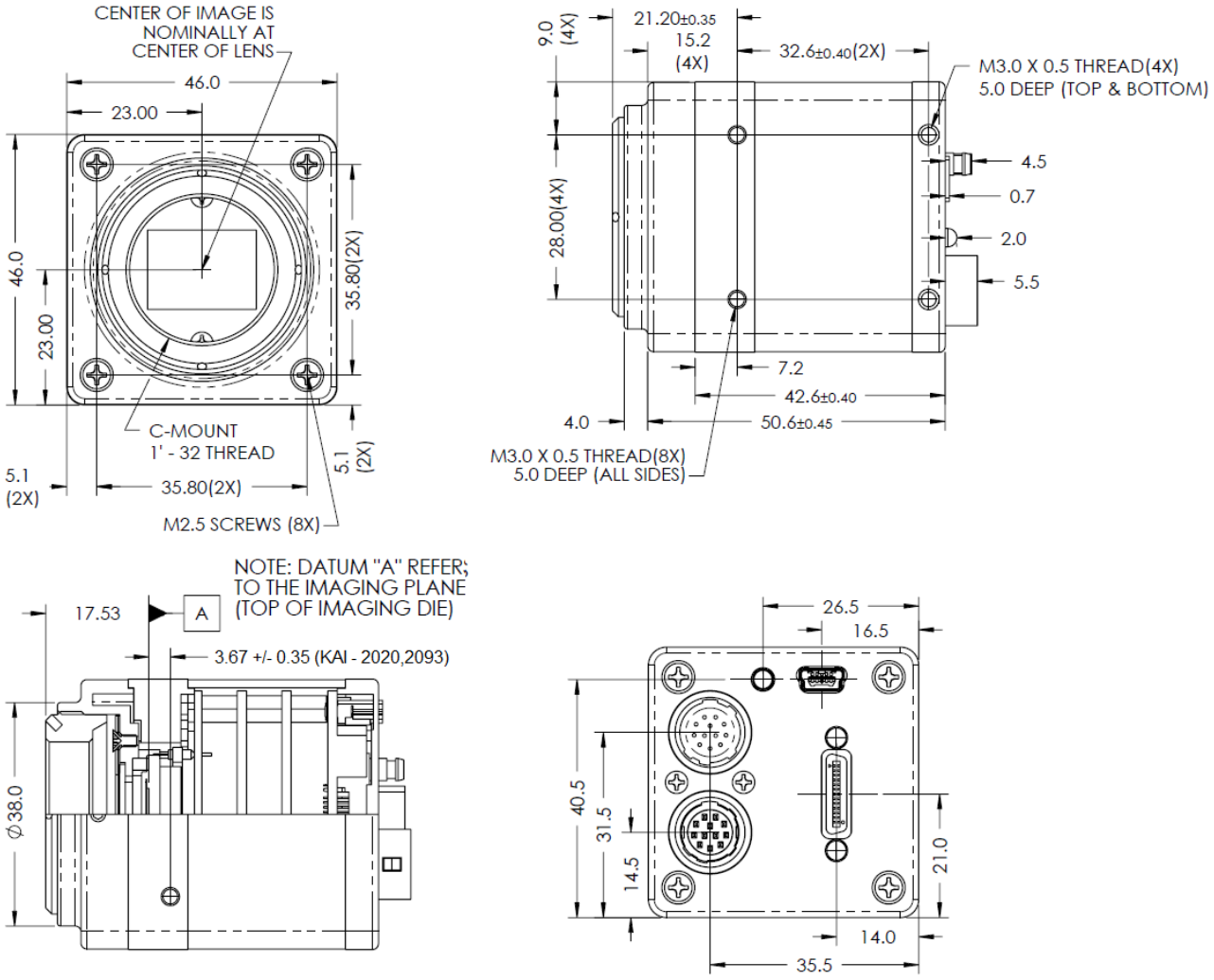

Figure 1.9b – C-mount Camera Link Output – Dimensional Drawings for CLB-B1620, and CLB-1920.

C – Mount Camera Link (CL) Output

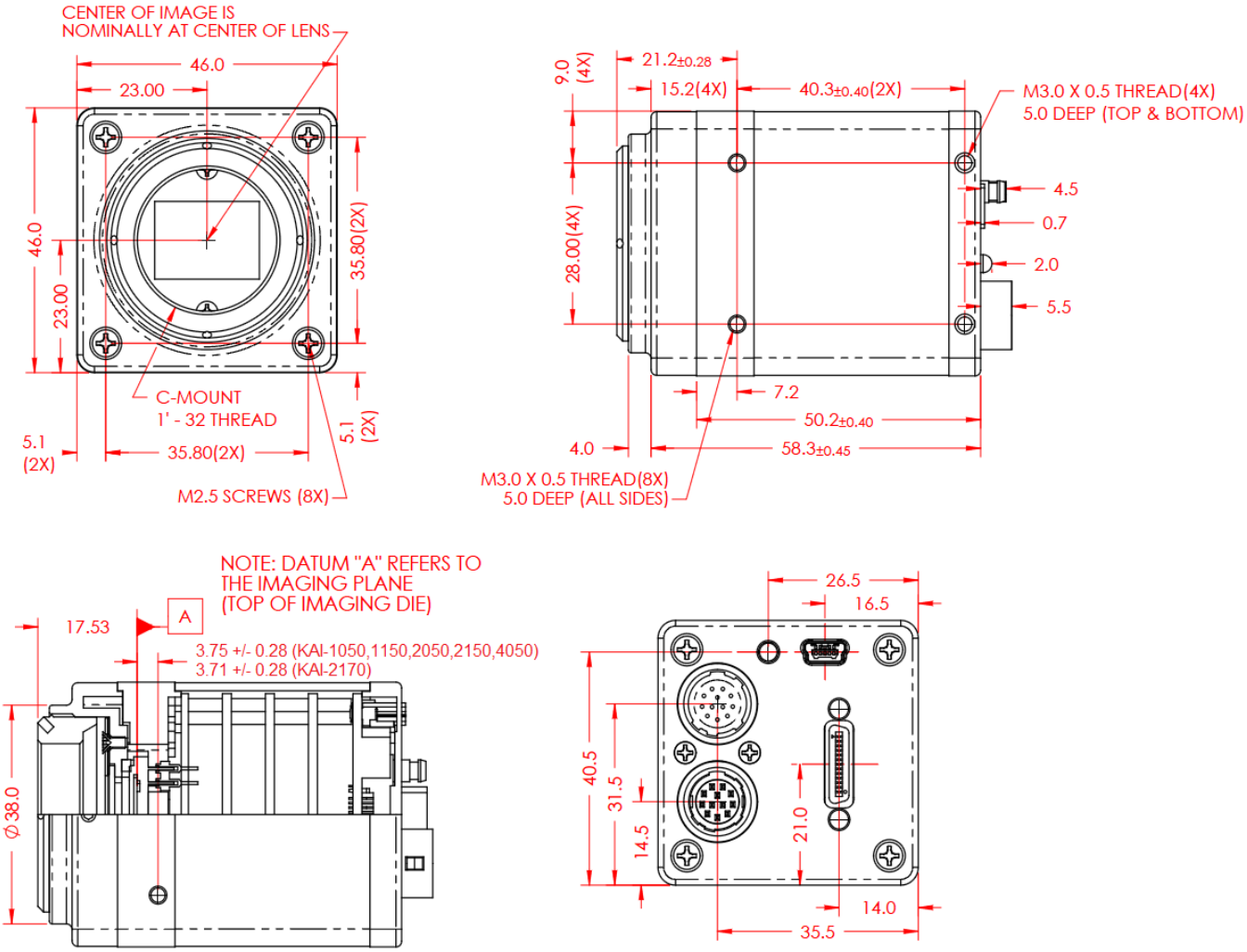

Figure 1.9c – C-mount Camera Link Output – Dimensional Drawings for CLB-B1020, B1320, B1621, B1921, B1923, and B2320.

C – Mount Camera Link (CL) Output

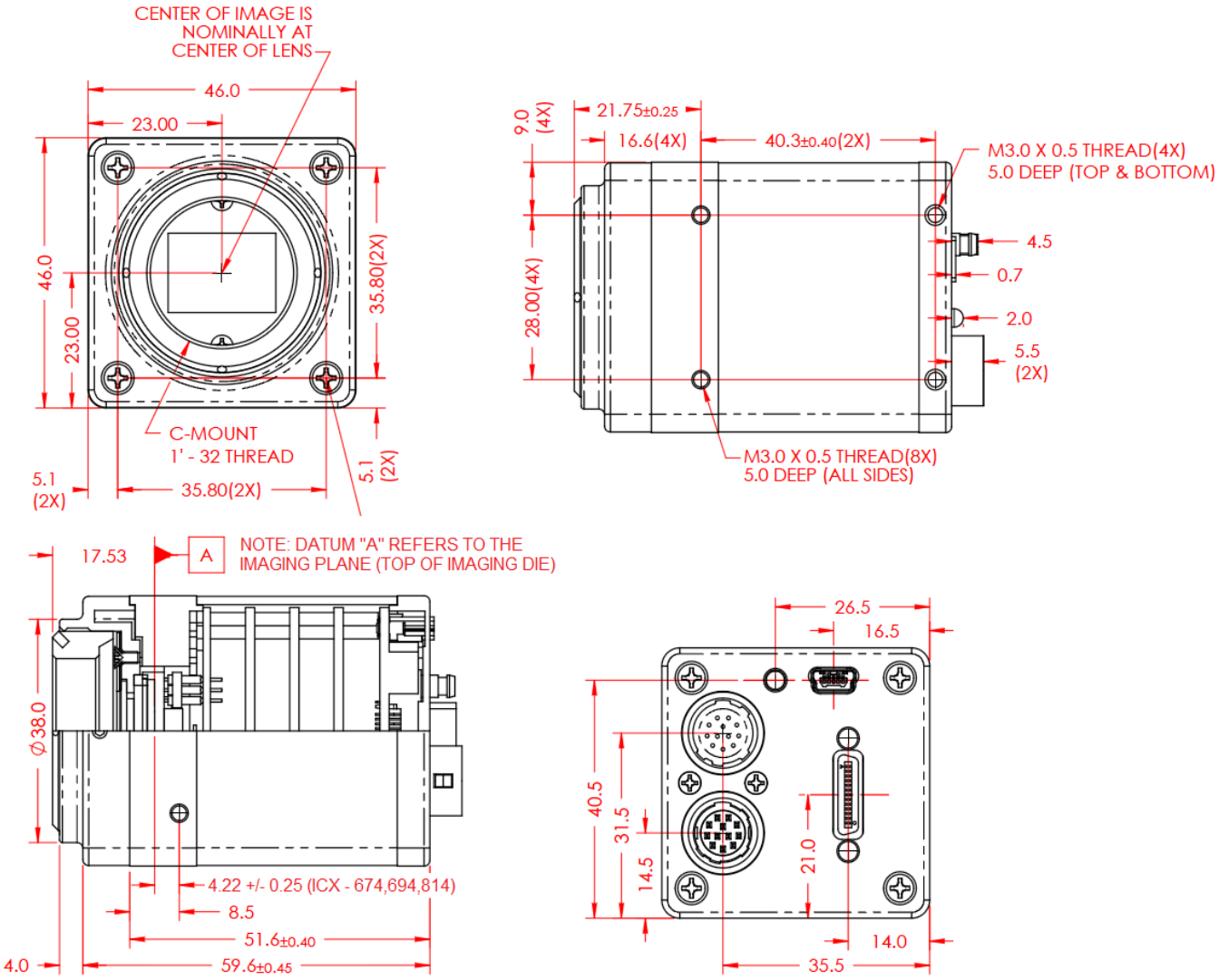

Figure 1.9d – C-mount Camera Link Output – Dimensional Drawings for CLB-B1922, B2720, B3420.

F – Mount Camera Link (CL) Output

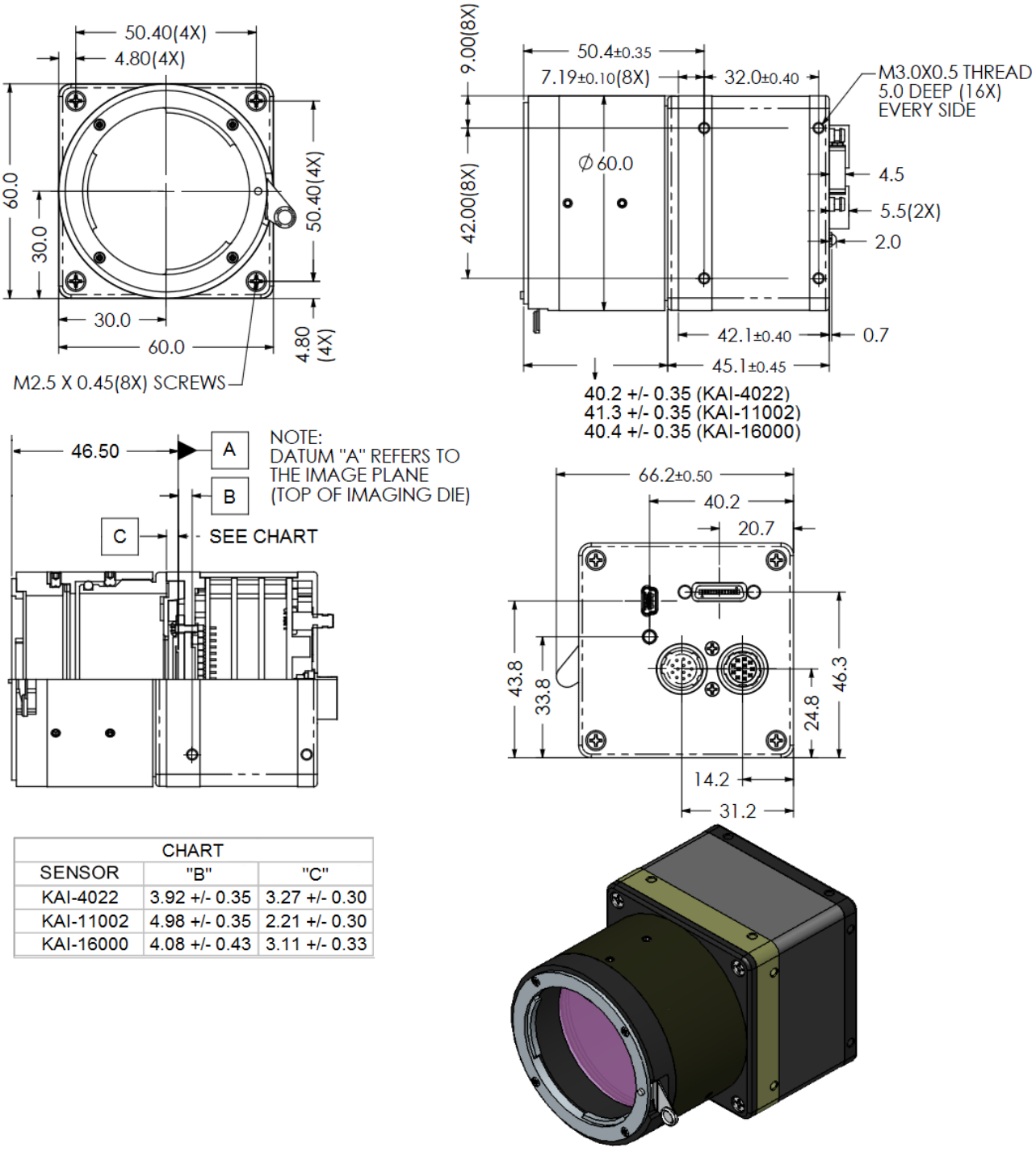

CHART		
SENSOR	"B"	"C"
KAI-4022	3.92 +/- 0.35	3.27 +/- 0.30
KAI-11002	4.98 +/- 0.35	2.21 +/- 0.30
KAI-16000	4.08 +/- 0.43	3.11 +/- 0.33

Figure 1.9e – F-mount Camera Link Output – Dimensional Drawings for CLB-B2020, B4020, B4820.

F – Mount Camera Link (CL) Output

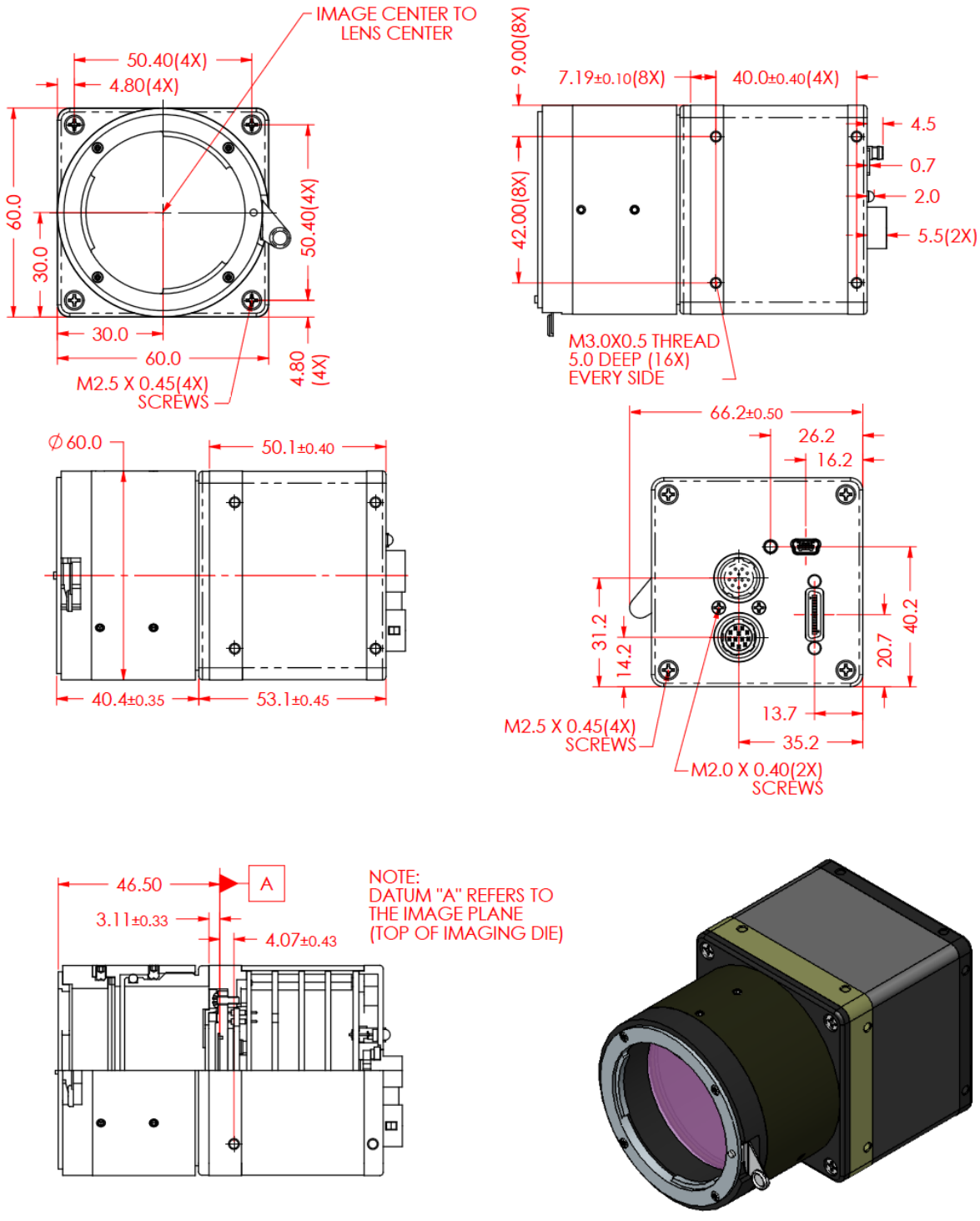

Figure 1.9f – F-mount Camera Link Output – Dimensional Drawings for CLB-B4821, and CLB-B4822.

F – Mount Camera Link (CL) Output

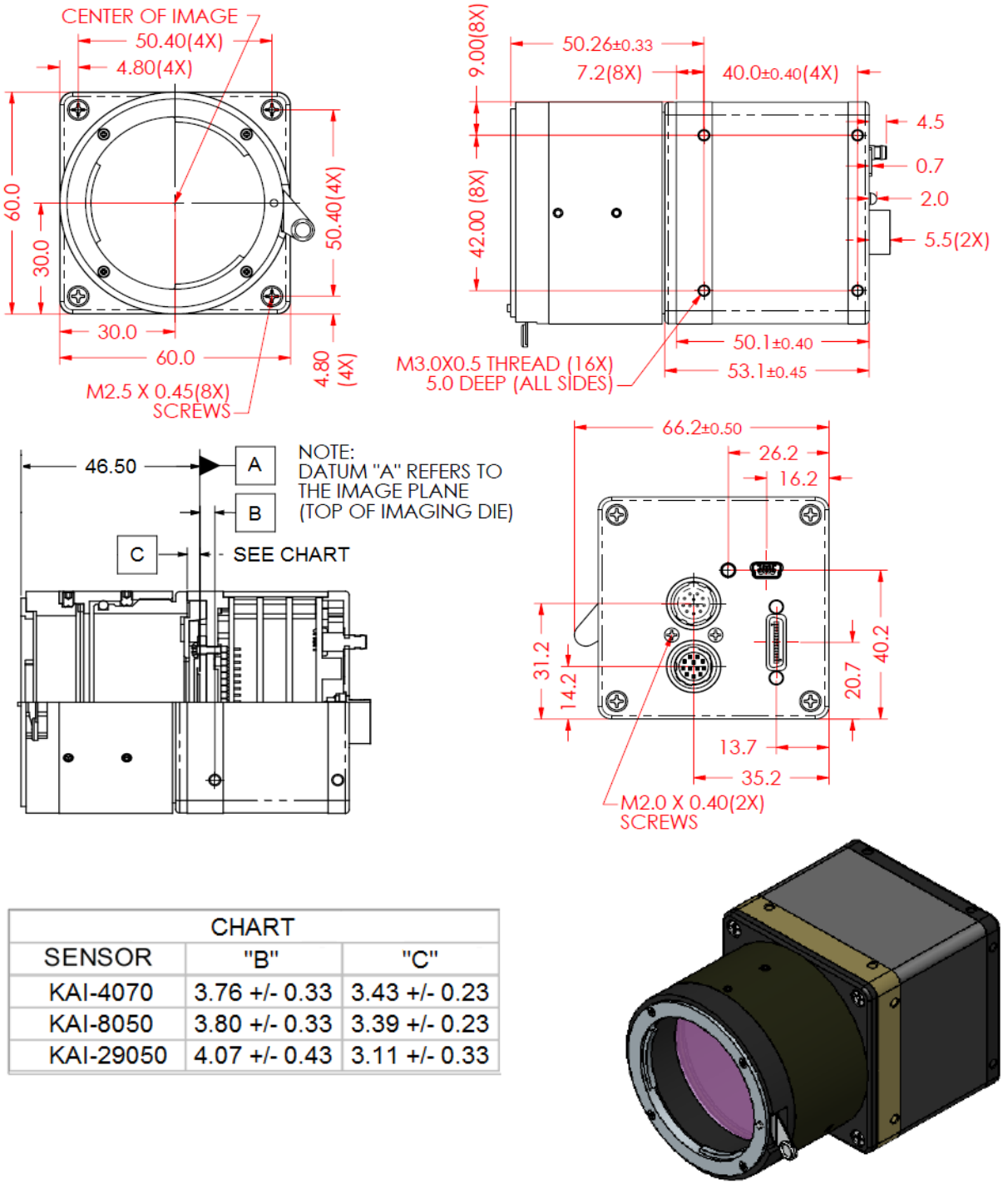

CHART		
SENSOR	"B"	"C"
KAI-4070	3.76 +/- 0.33	3.43 +/- 0.23
KAI-8050	3.80 +/- 0.33	3.39 +/- 0.23
KAI-29050	4.07 +/- 0.43	3.11 +/- 0.33

Figure 1.9g – F-mount Camera Link Output – Dimensional Drawings for CLB-B2021, CLB-B3320, and CLB-B6620.

C – Mount Camera Link (CL) Output

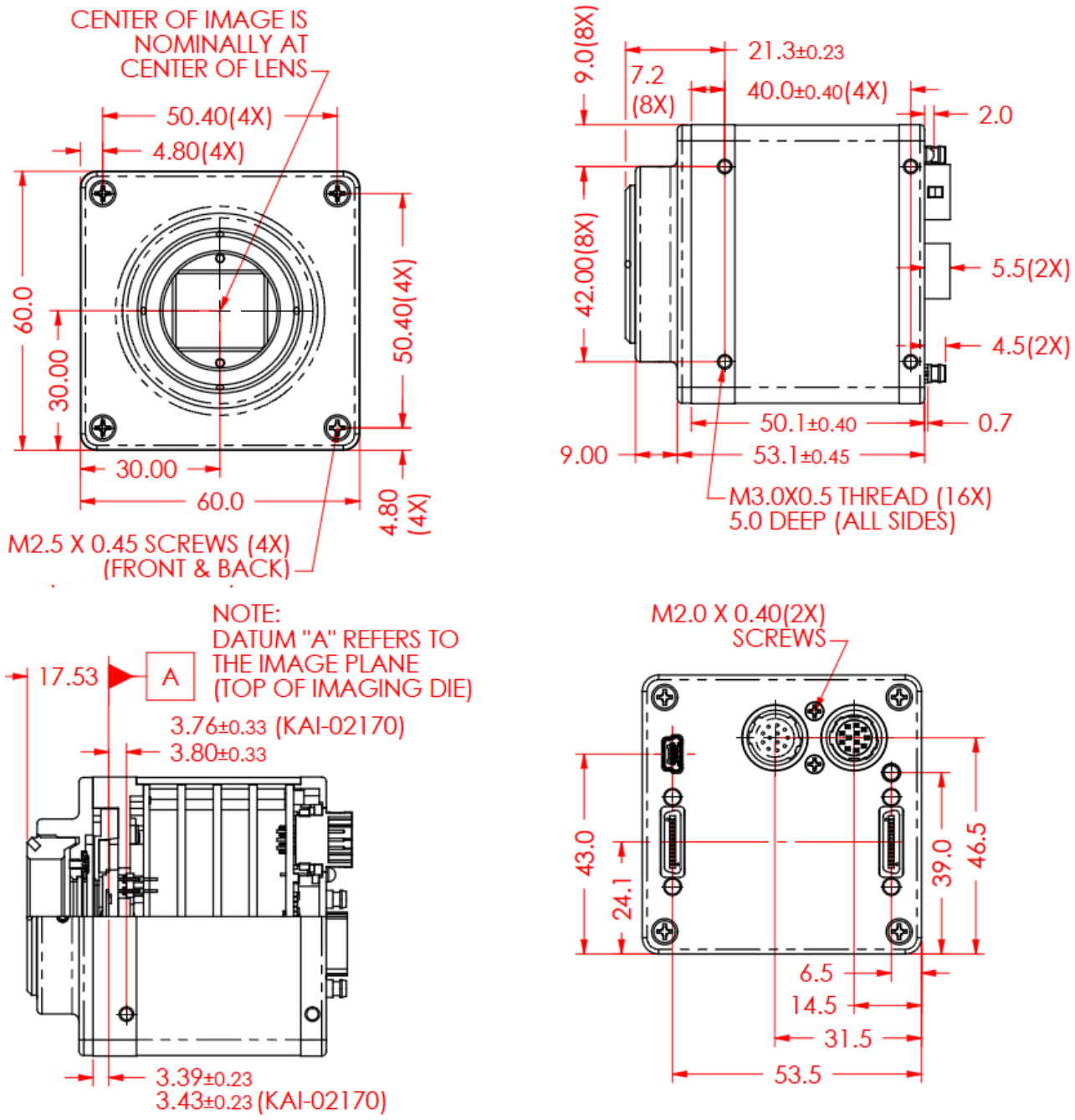

Figure 1.9h – F-mount Camera Link Output – Dimensional Drawings for CLM-B1040, B1340, B1641, B1941, B1943, and B2340.

C –Mount Camera Link (CL) Output

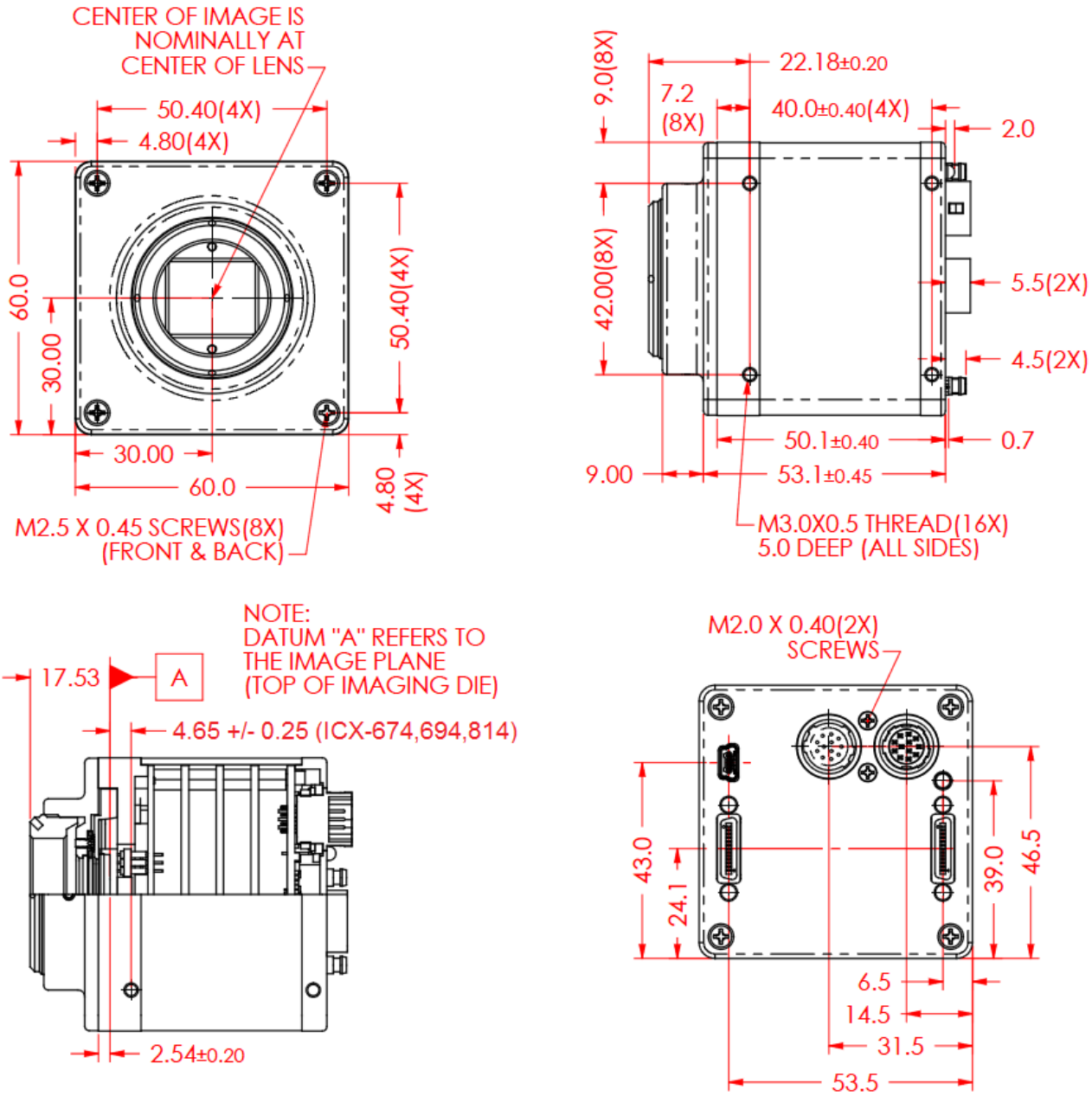

Figure 1.9i – C-mount Camera Link Output – Dimensional Drawings for CLM-B1942, CLM-B2740, CLM-B3440.

F –Mount Camera Link (CL) Output

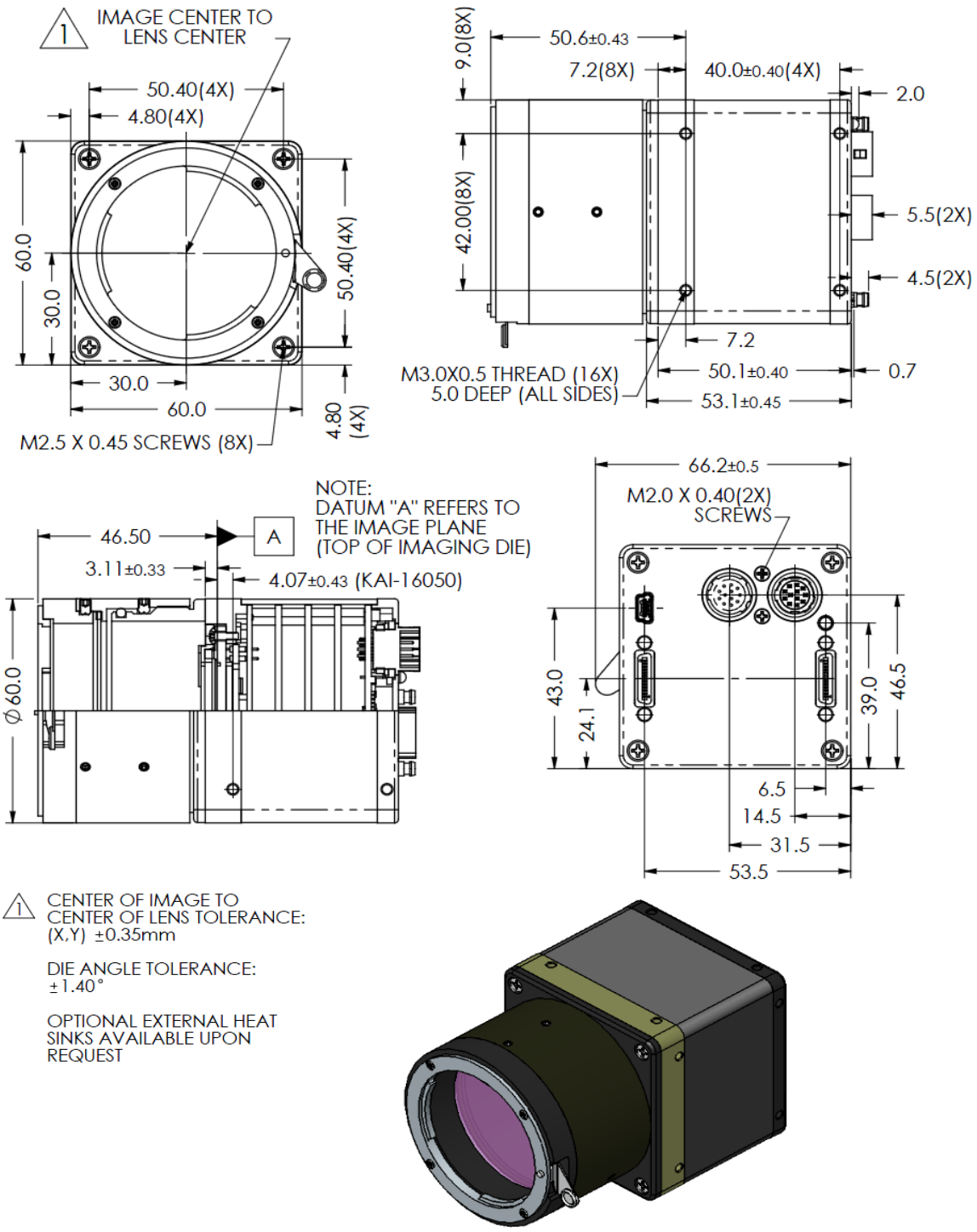

Figure 1.9j – F-mount Camera Link Output – Dimensional Drawings for CLM-B4841, and CLM-B4842

F –Mount Camera Link (CL) Output

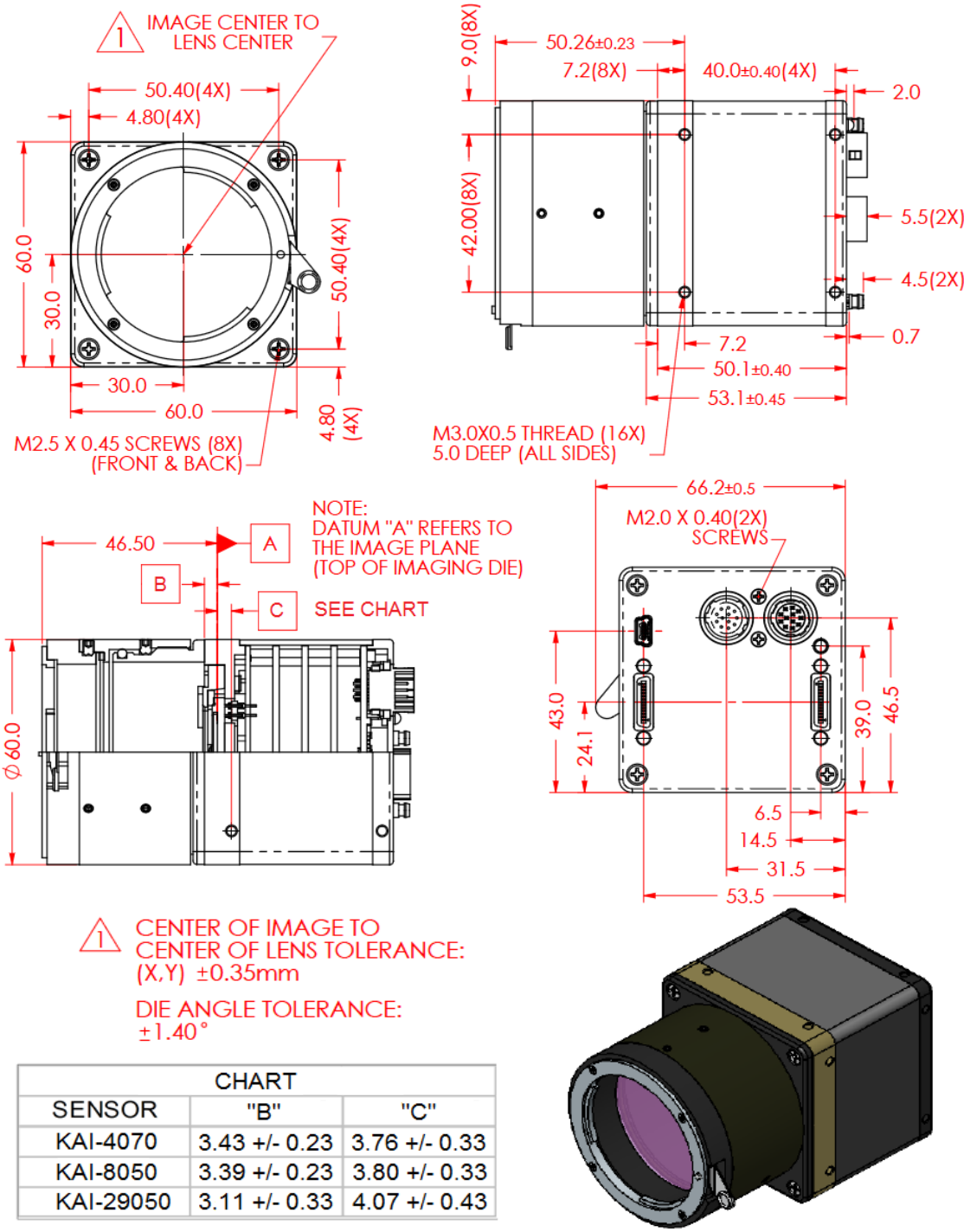

CHART		
SENSOR	"B"	"C"
KAI-4070	3.43 +/- 0.23	3.76 +/- 0.33
KAI-8050	3.39 +/- 0.23	3.80 +/- 0.33
KAI-29050	3.11 +/- 0.33	4.07 +/- 0.43

Figure 1.9k – F-mount Camera Link Output – Dimensional Drawings for CLM-B2041, CLM-B3340, CLM-B6640

F –Mount Camera Link (CL) Output

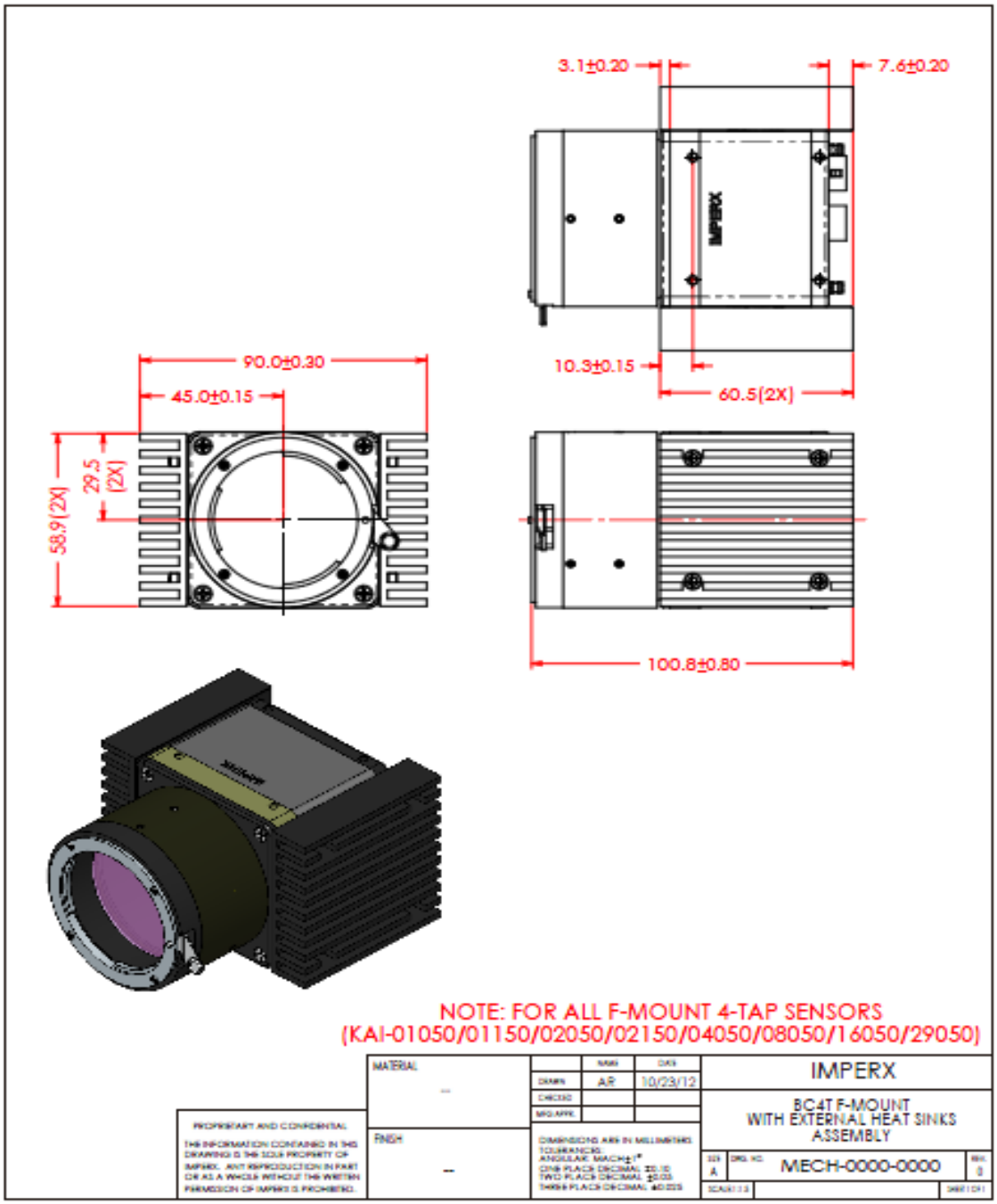

Figure 1.9l – F-mount camera link output – with external heatsink dimensional drawings for CLB-B3340, and CLB-B6640

C – Mount GigE Vision (GEV) Output

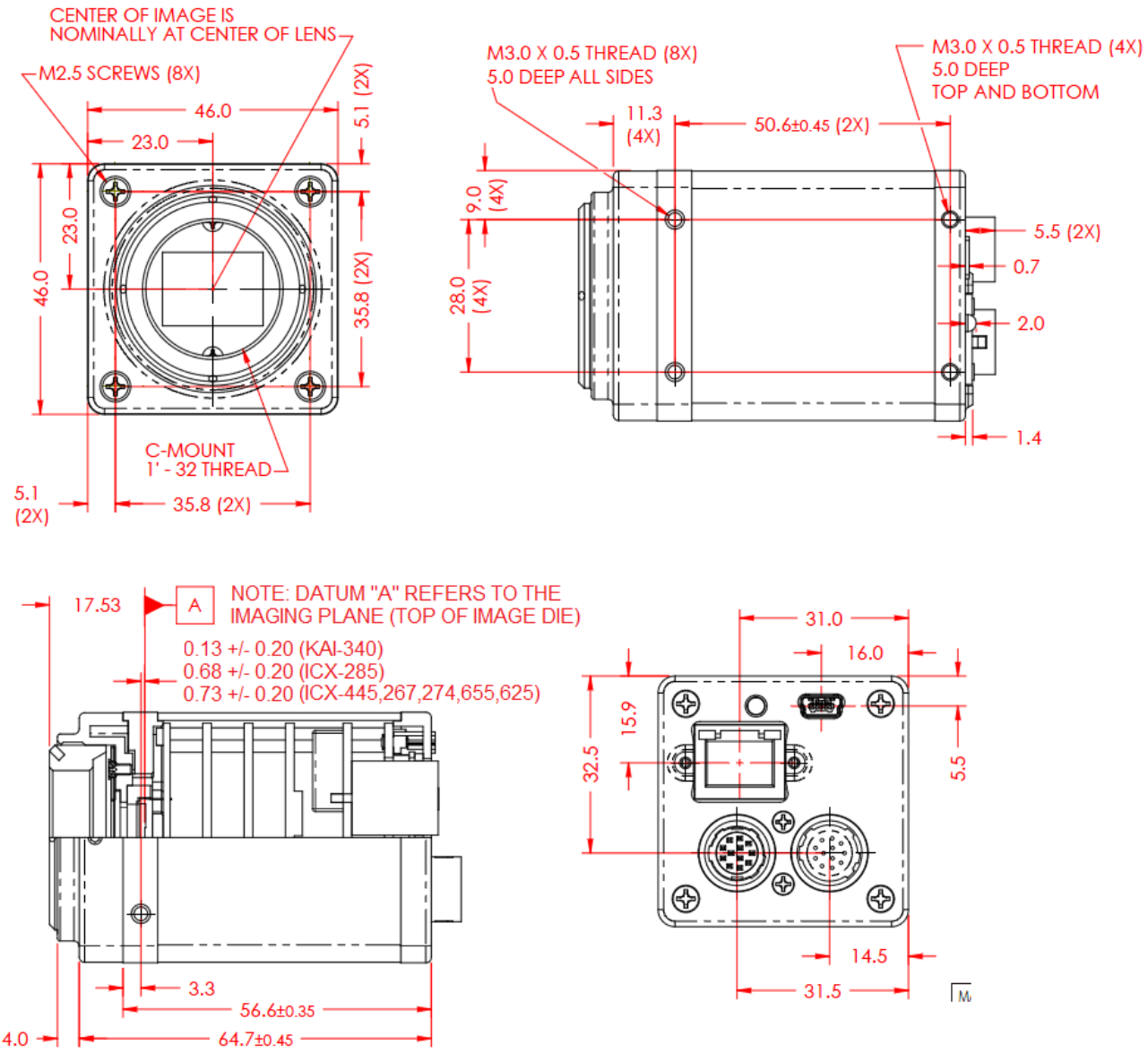

Figure 1.10a – C-mount GigE Vision Output – Dimensional Drawings for GEV-B0610, B0620, B1410, B1610, B2510, and B2520.

C – Mount GigE Vision (GEV) Output

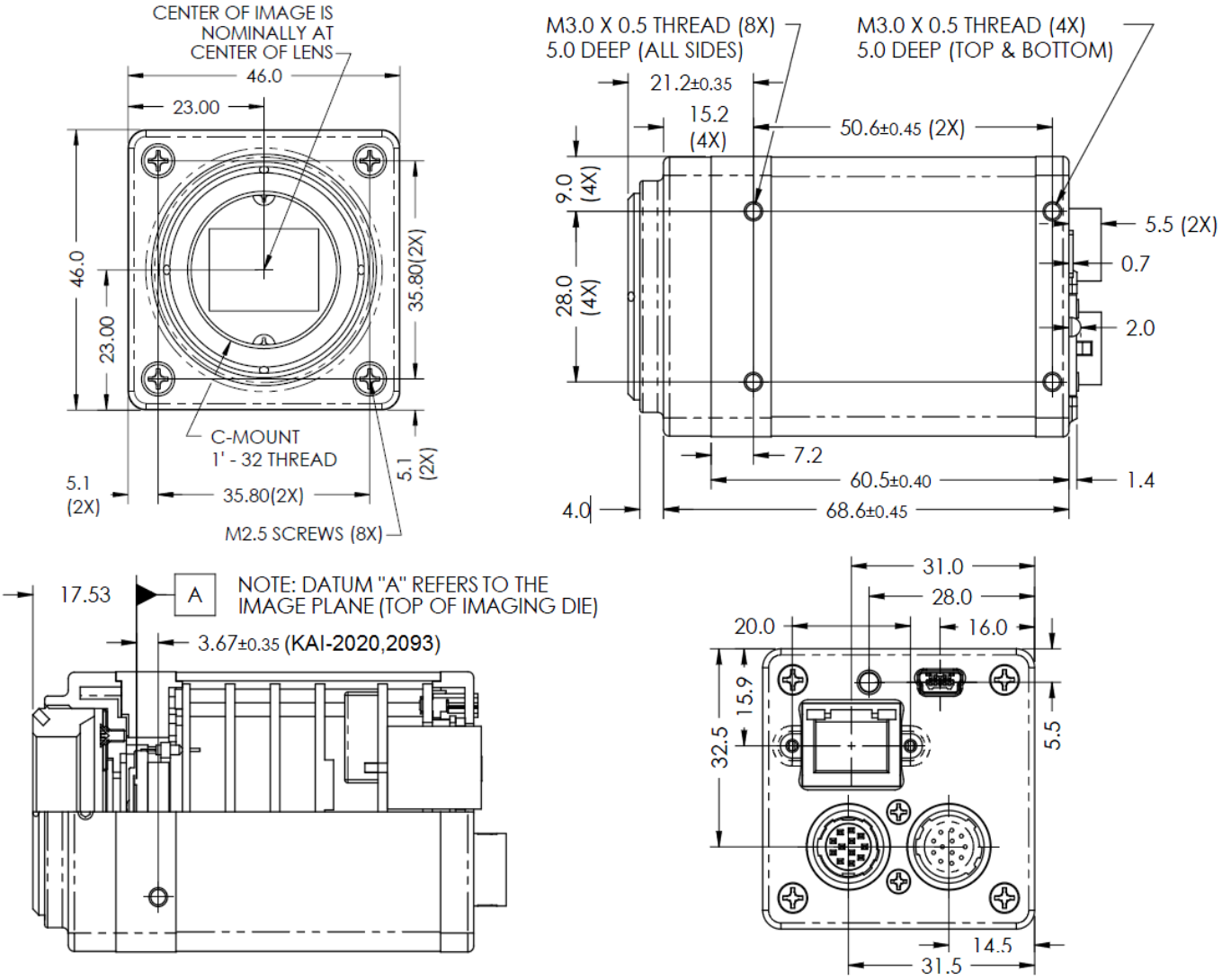

Figure 1.10b – C-mount GigE Vision Output – Dimensional Drawings for GEV-B1620, and GEV-B1920.

C – Mount GigE Vision (GEV) Output

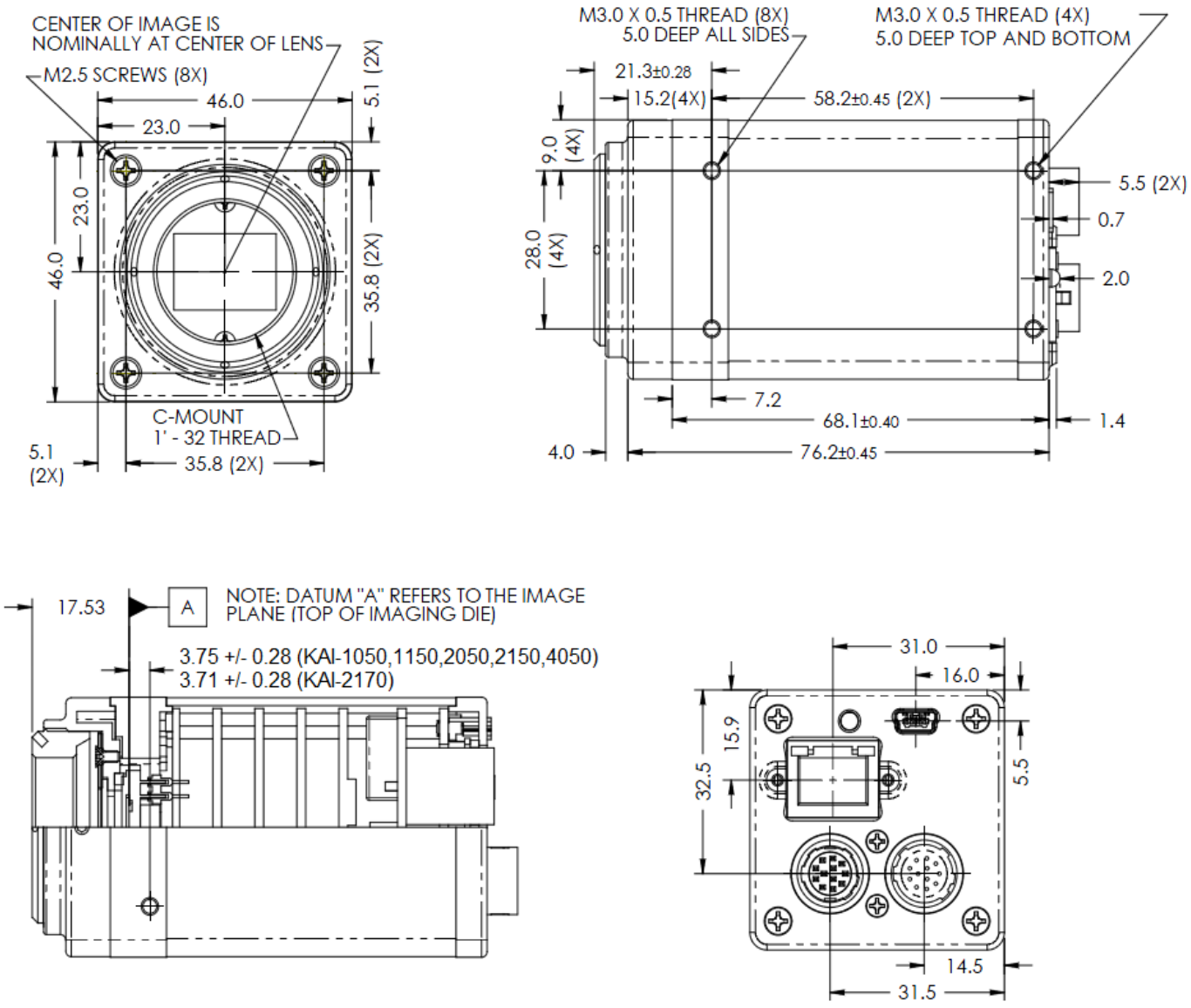

Figure 1.10c – C-mount GigE Vision Output – Dimensional Drawings for GEV-B1020, B1320, B1621, B1921, B1923, and B2320.

C – Mount GigE Vision (GEV) Output

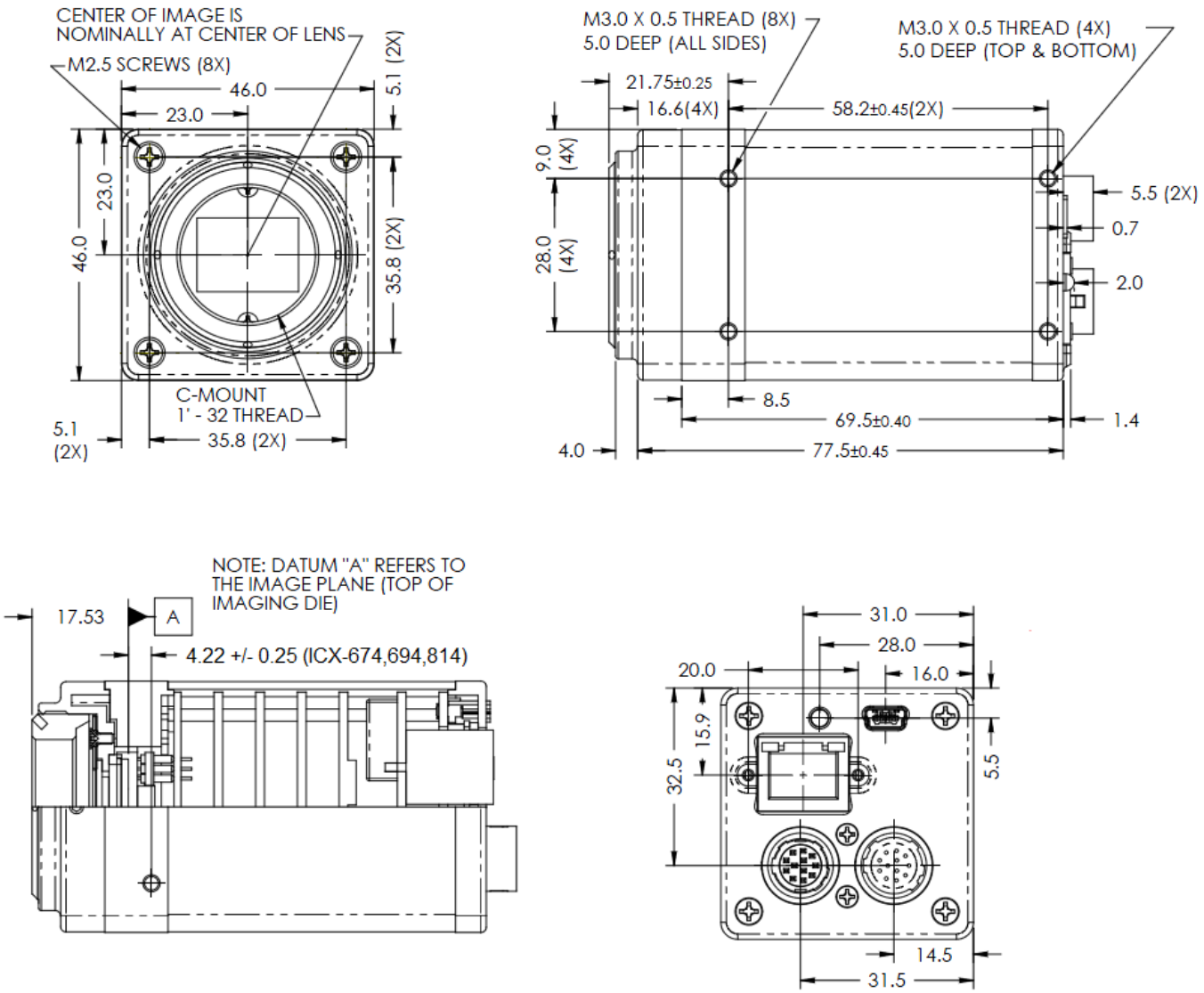

Figure 1.10d – C-mount GigE Vision Output – Dimensional Drawings for GEV-B1922, GEV-B2720, and GEV-B3420.

F – Mount GigE Vision (GEV) Output

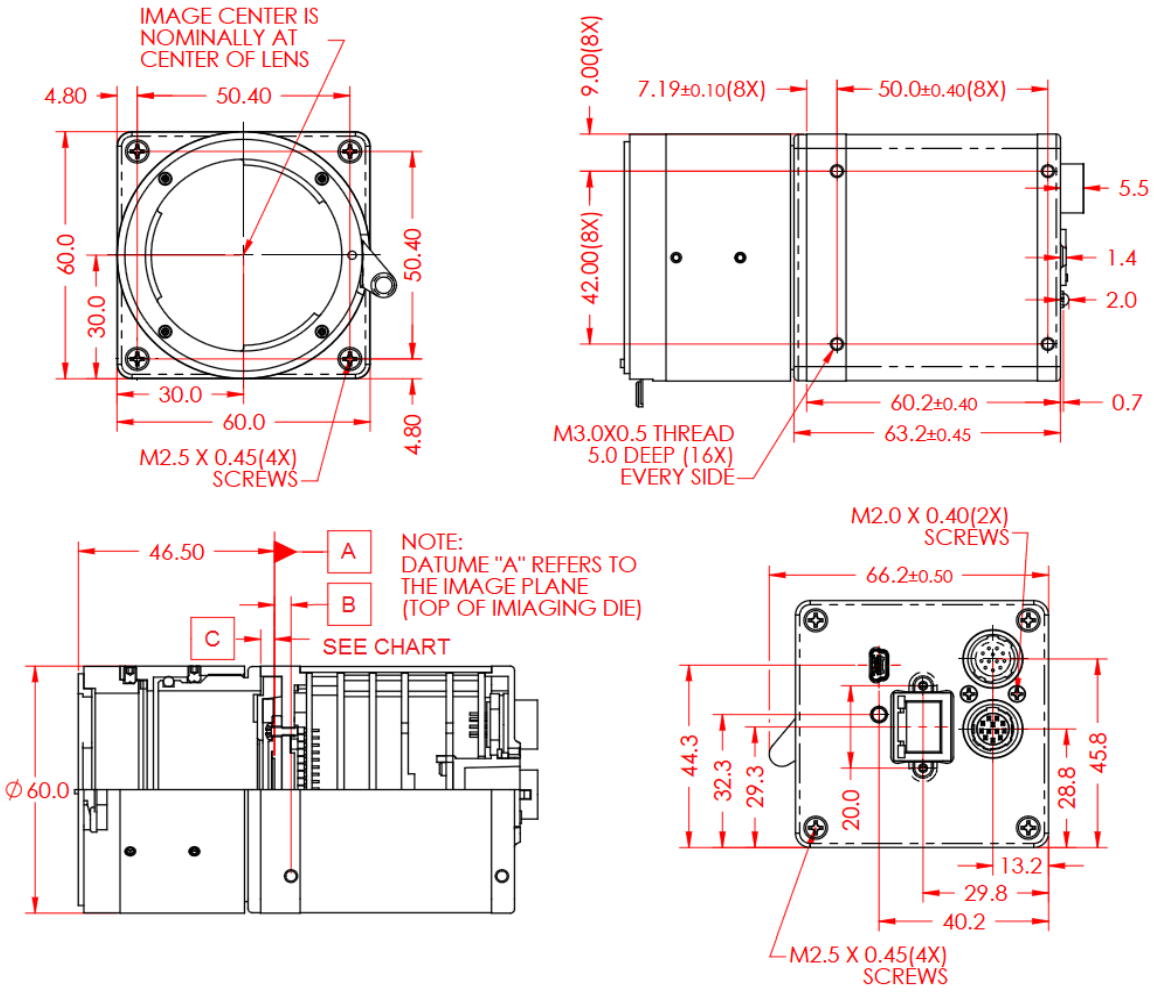

CHART		
SENSOR	"B"	"C"
KAI-4022	3.92 +/- 0.35	3.27 +/- 0.30
KAI-11002	4.98 +/- 0.35	2.21 +/- 0.30
KAI-16000	4.08 +/- 0.43	3.11 +/- 0.33

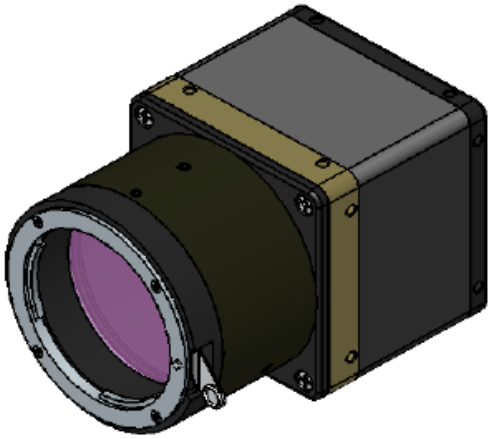

Figure 1.10e – F-mount GigE Vision Output – Dimensional Drawings for GEV-B2020, GEV- B4020, and GEV-B4820.

F – Mount GigE Vision (GEV) Output

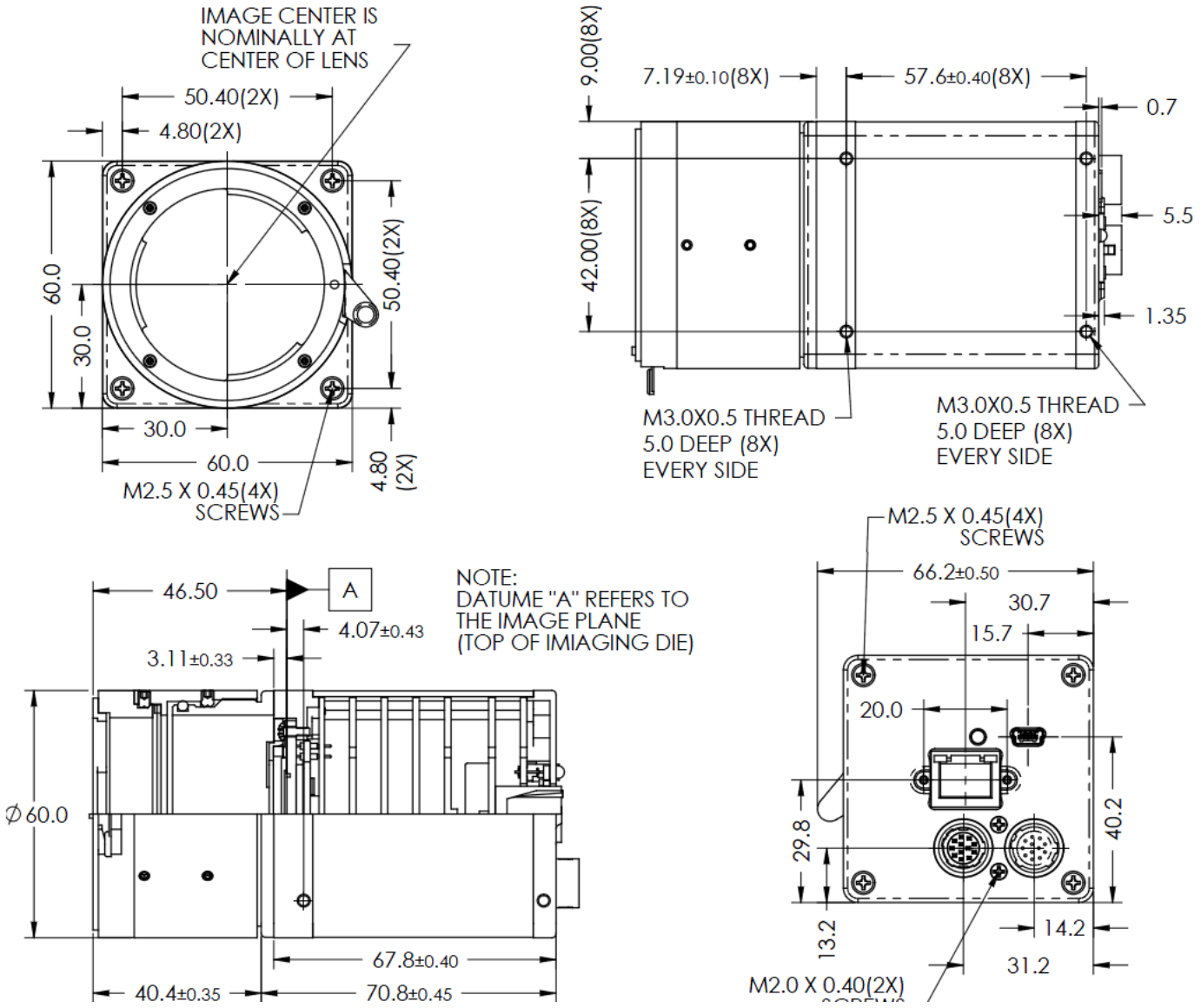

Figure 1.10f – F-mount GigE Vision Output – Dimensional Drawings for GEV-B4821, and GEV-B4822.

F – Mount GigE Vision (GEV) Output

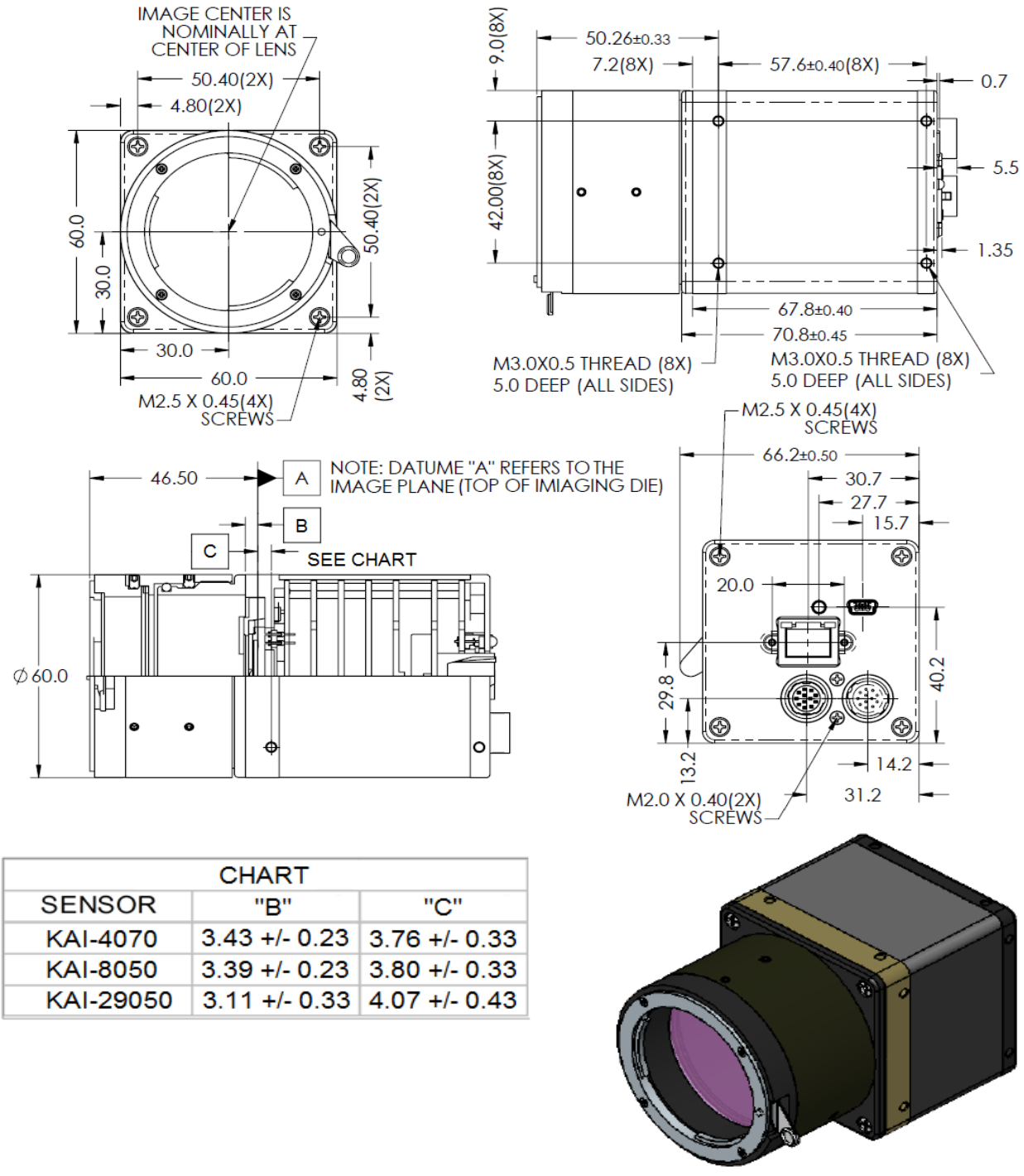

CHART		
SENSOR	"B"	"C"
KAI-4070	3.43 +/- 0.23	3.76 +/- 0.33
KAI-8050	3.39 +/- 0.23	3.80 +/- 0.33
KAI-29050	3.11 +/- 0.33	4.07 +/- 0.43

Figure 1.10g – F-mount GigE Vision Output – Dimensional Drawings for GEV-B2021, GEV-B3320, and B6620.

C – Mount PoE GigE Vision (GEV) Output

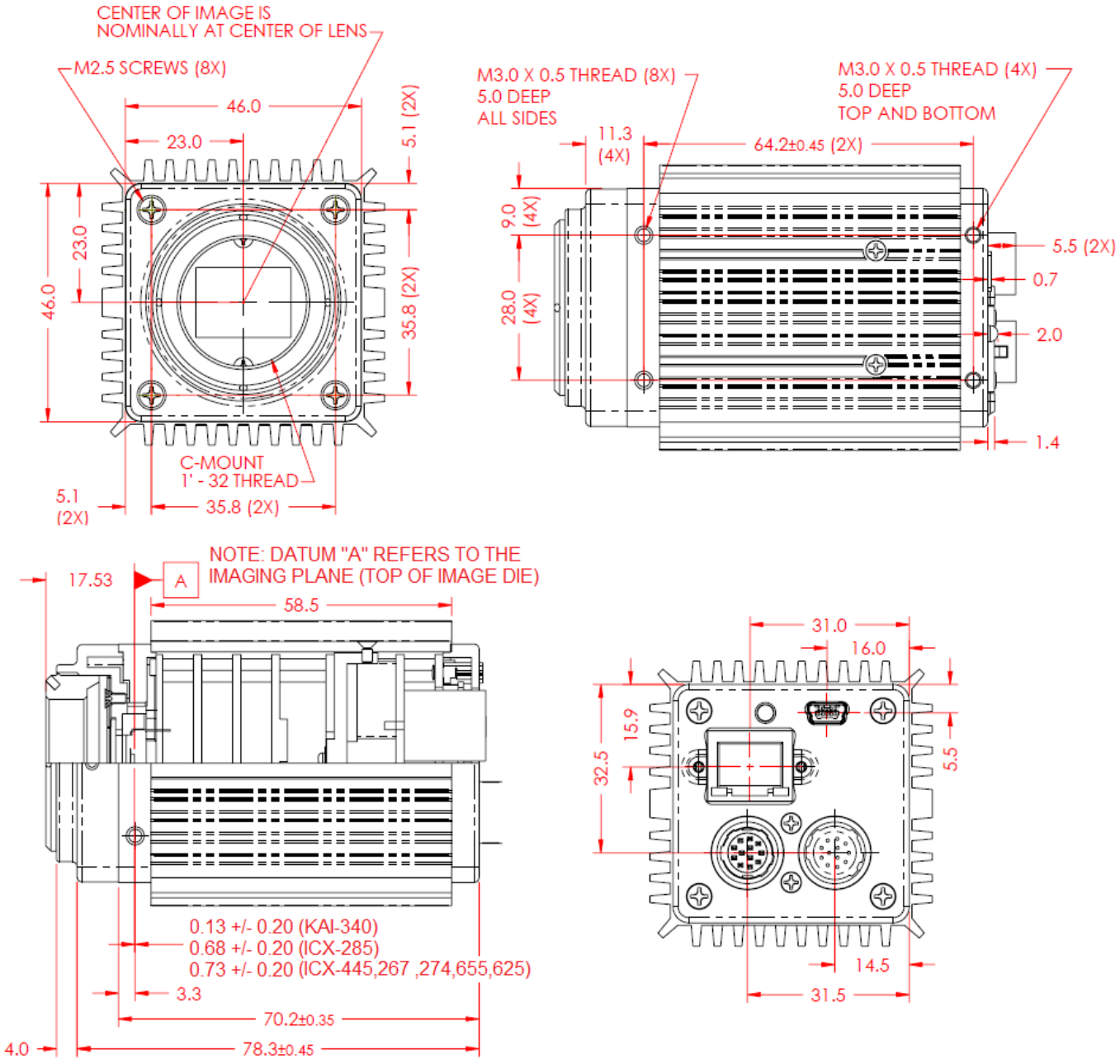

Figure 1.11a – C-mount PoE GigE Vision Output – Dimensional Drawings for PoE-B0610, B0620, B1410, B1610, B2510, and B2520.

C – Mount PoE GigE Vision (GEV) Output

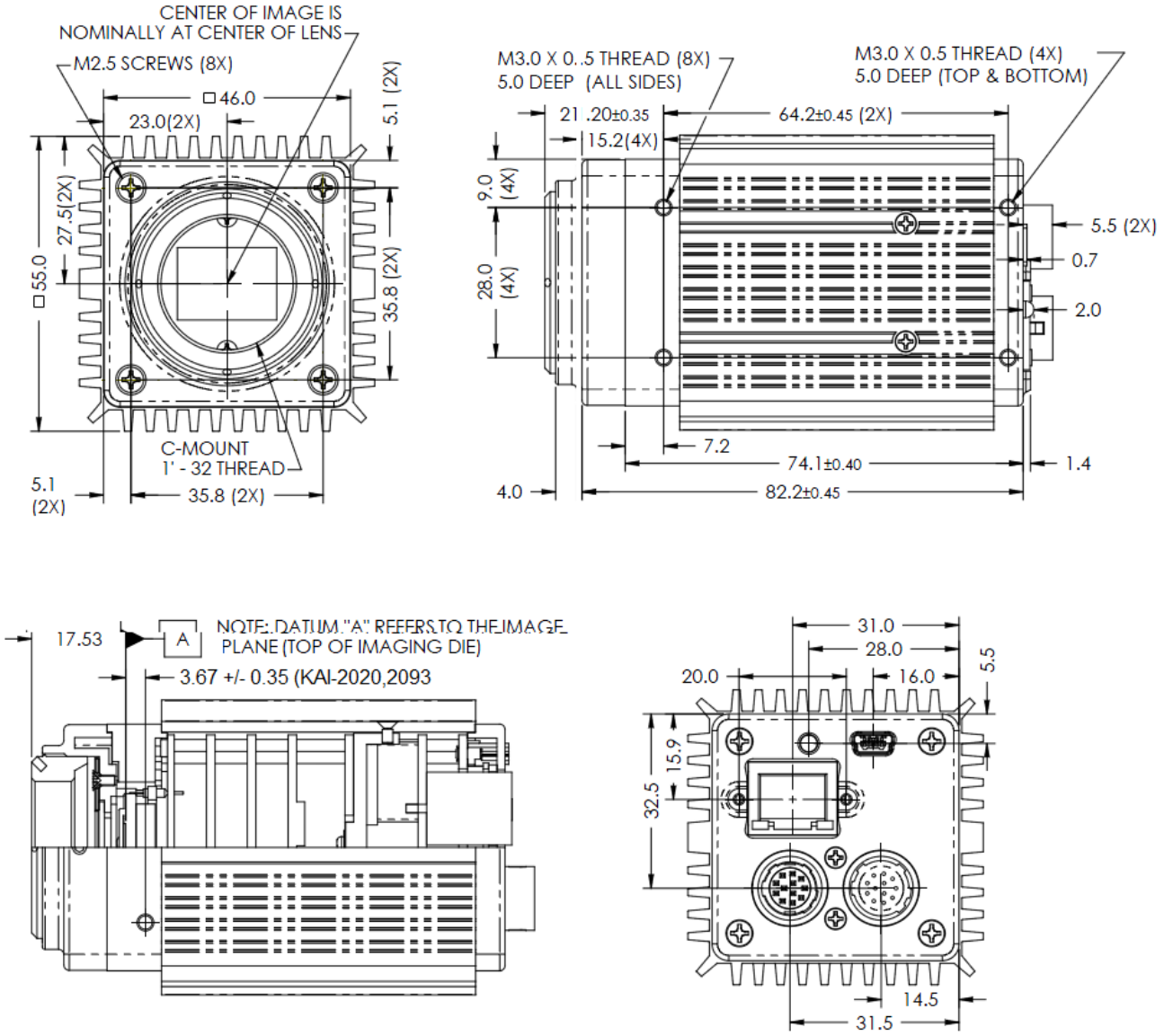

Figure 1.11b – C-mount PoE GigE Vision Output – Dimensional Drawings for PoE-B1620, and PoE-B1920.

C – Mount PoE GigE Vision (GEV) Output

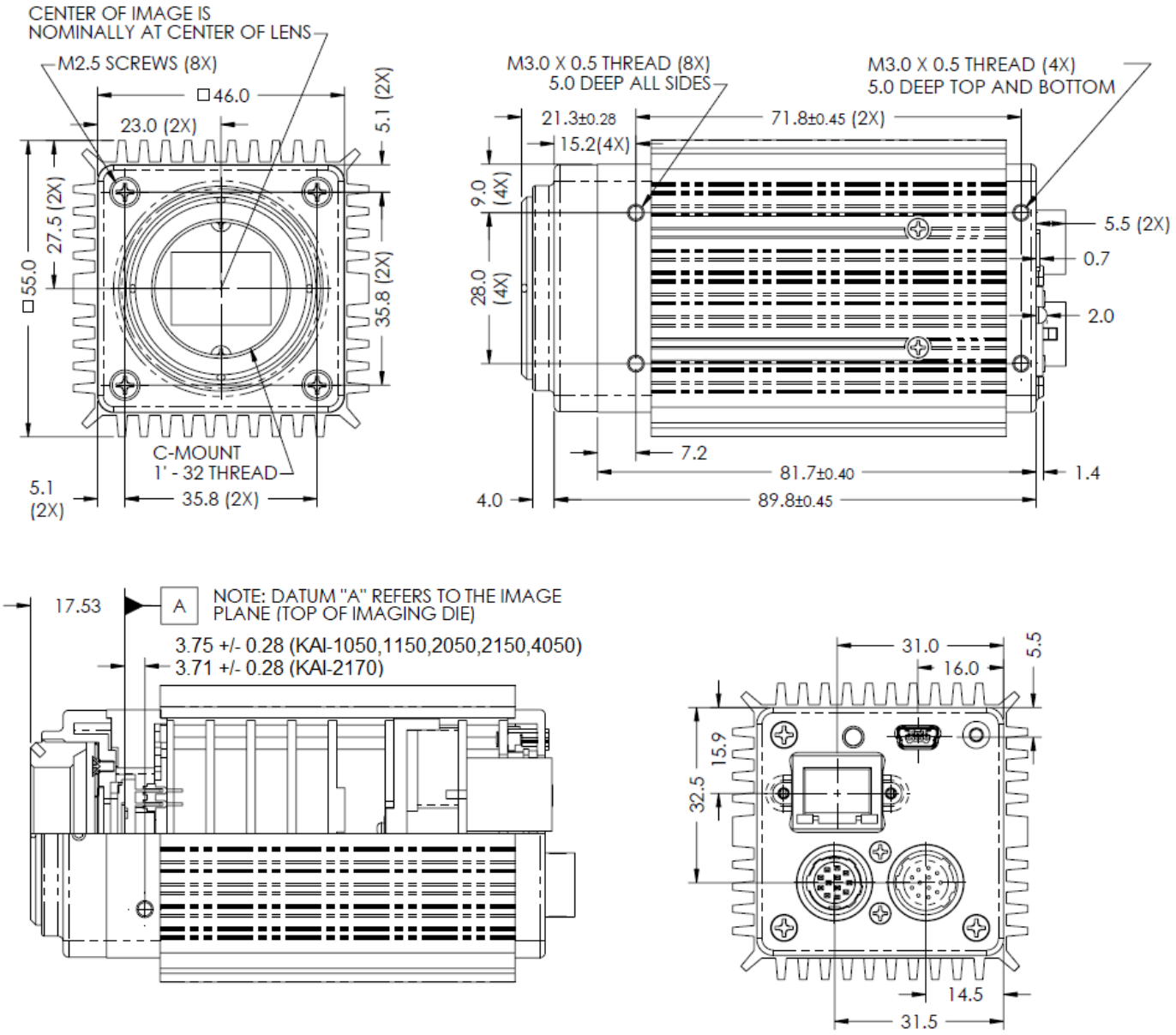

Figure 1.11c – C-mount PoE GigE Vision Output – Dimensional Drawings for PoE-B1020, B1320, B1621, B1921, B1923, and B2320.

C – Mount PoE GigE Vision (GEV) Output

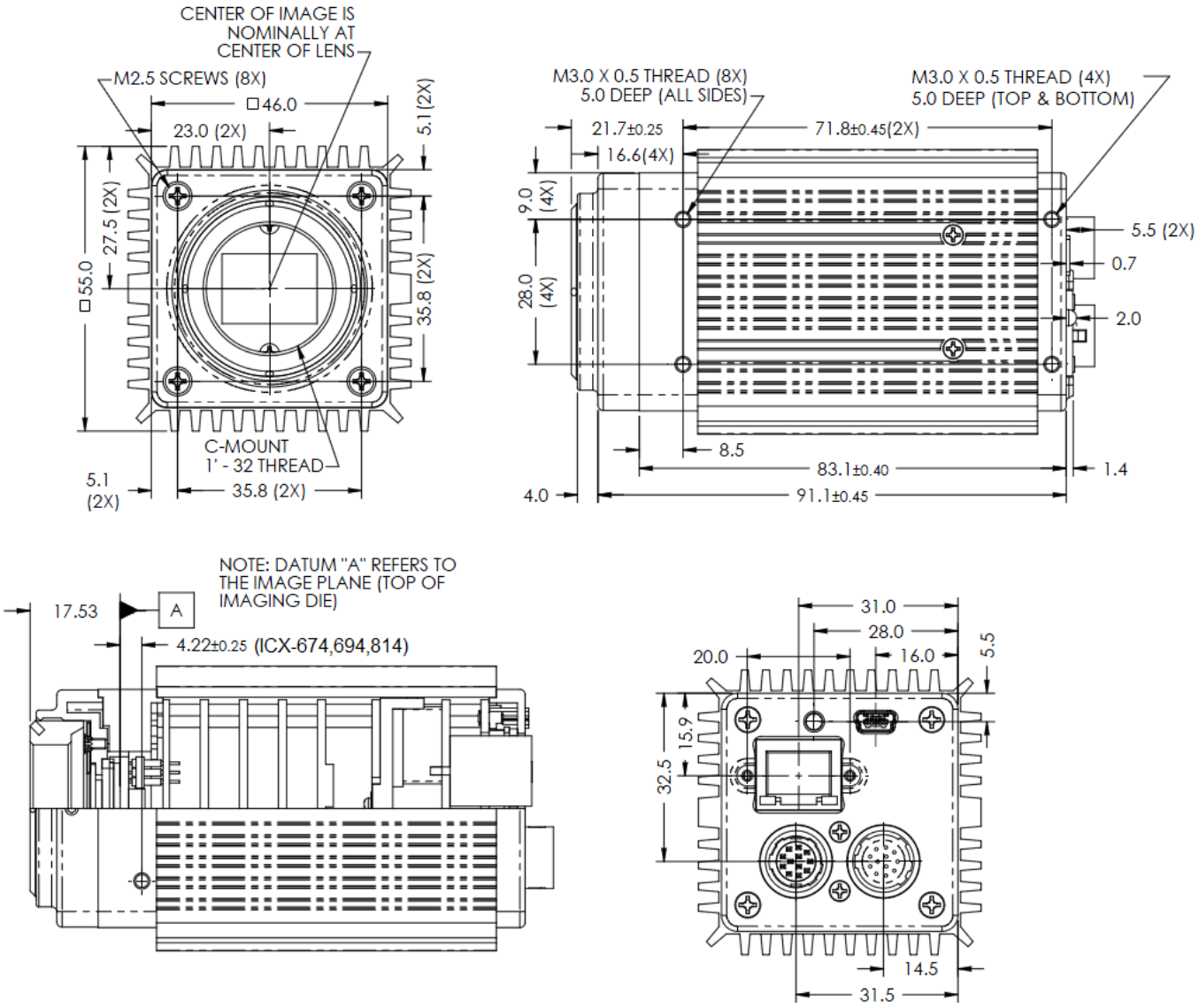

Figure 1.11d – C-mount PoE GigE Vision Output – Dimensional Drawings for PoE-B1922, GEV-B2720, and GEV-B3420.

F – Mount PoE GigE Vision (GEV) Output

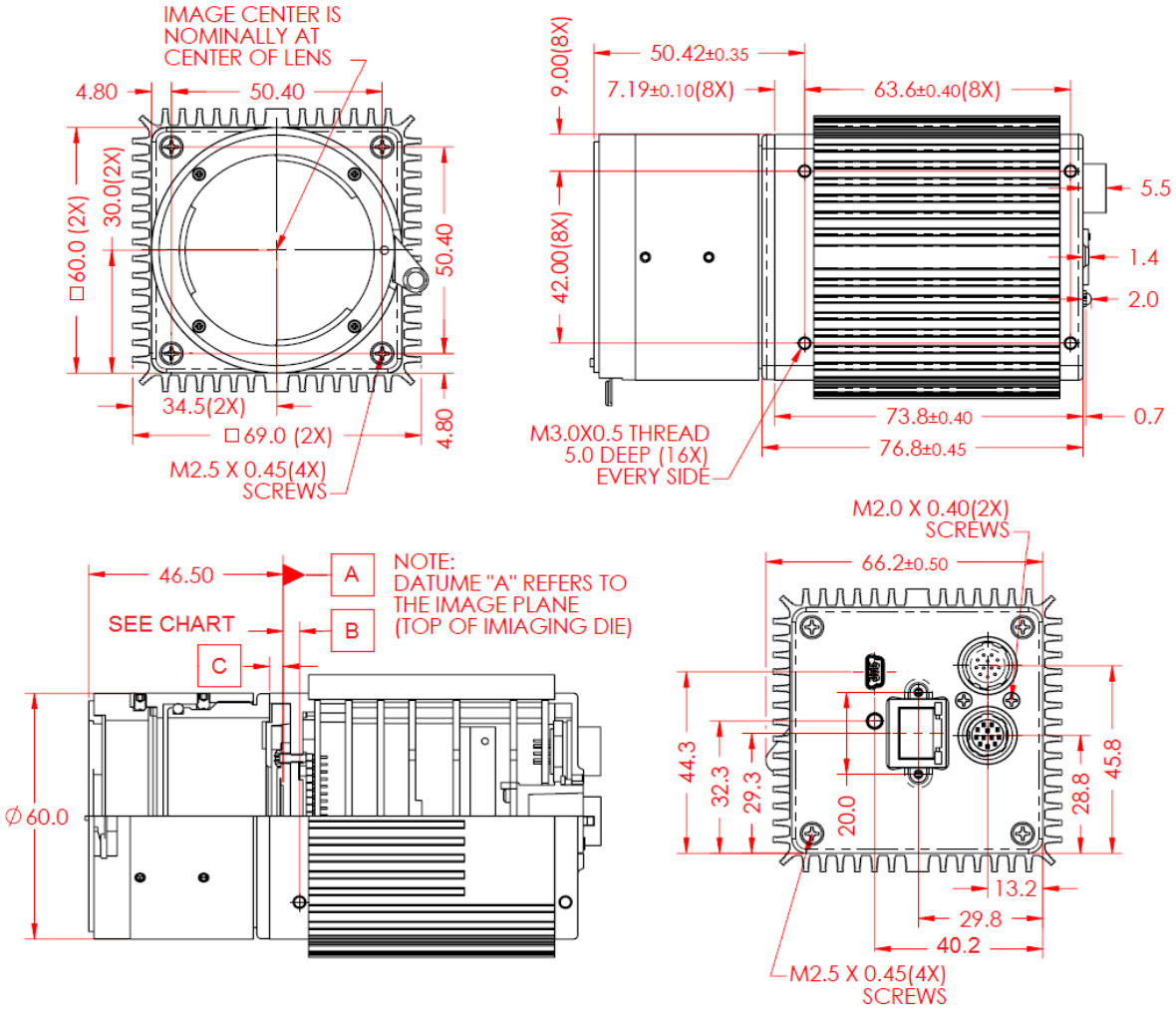

CHART		
SENSOR	"B"	"C"
KAI-4022	3.92 +/- 0.35	3.27 +/- 0.30
KAI-11002	4.98 +/- 0.35	2.21 +/- 0.30
KAI-16000	4.08 +/- 0.43	3.11 +/- 0.33

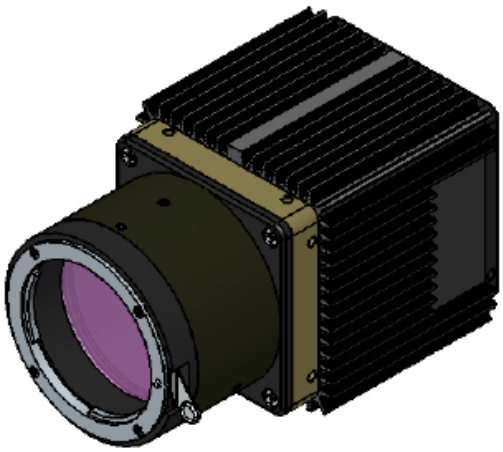

Figure 1.11e – F-mount PoE GigE Vision Output – Dimensional Drawings for PoE-B2020, PoE-B4020, and PoE-B4820.

F – Mount PoE GigE Vision (GEV) Output

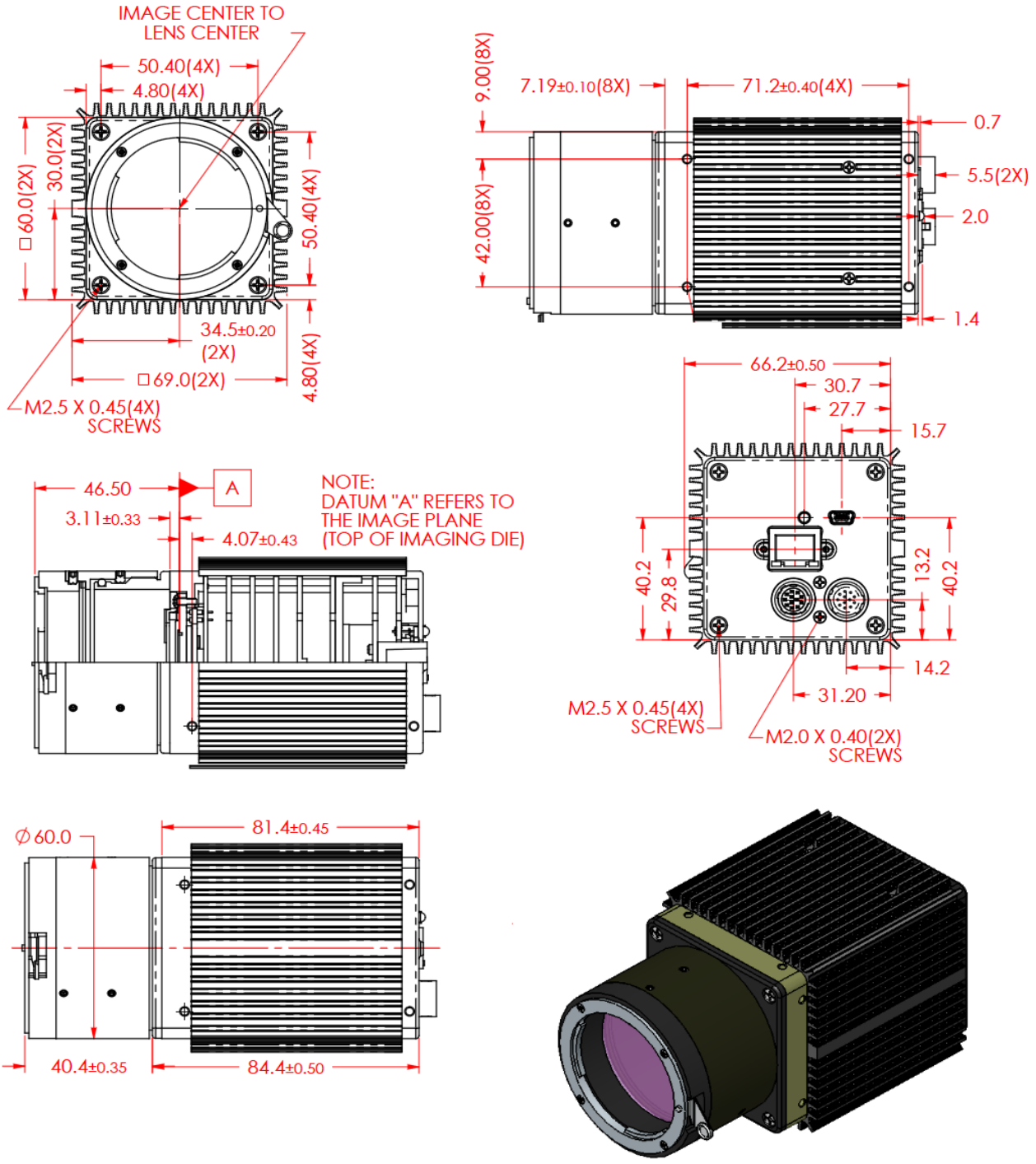

Figure 1.11f – F-mount PoE GigE Vision Output – Dimensional Drawings for PoE-B4821, and PoE-B4822.

F – Mount PoE GigE Vision (GEV) Output

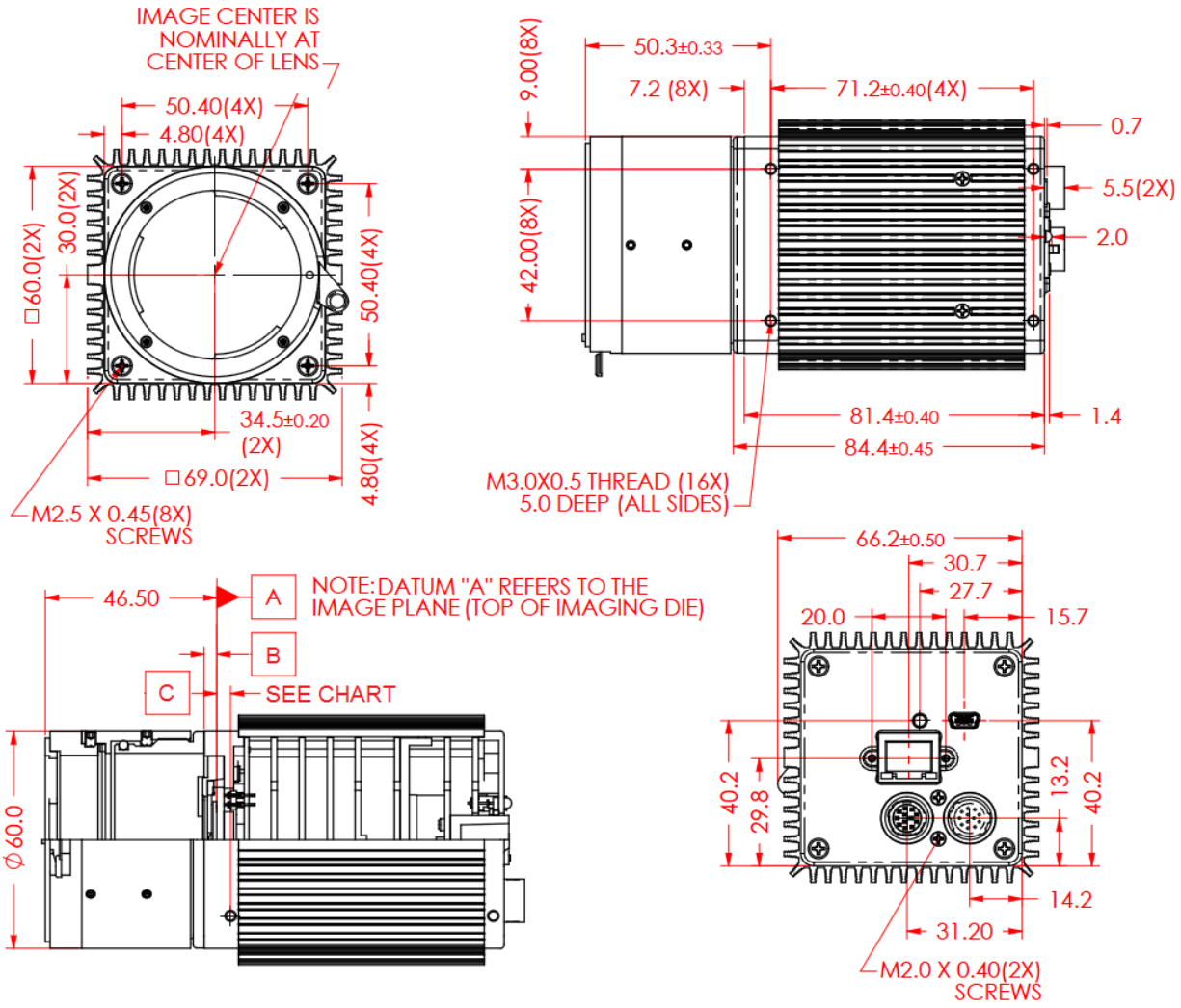

CHART		
SENSOR	"B"	"C"
KAI-4070	3.43 +/- 0.23	3.76 +/- 0.33
KAI-8050	3.39 +/- 0.23	3.80 +/- 0.33
KAI-29050	3.11 +/- 0.33	4.07 +/- 0.43

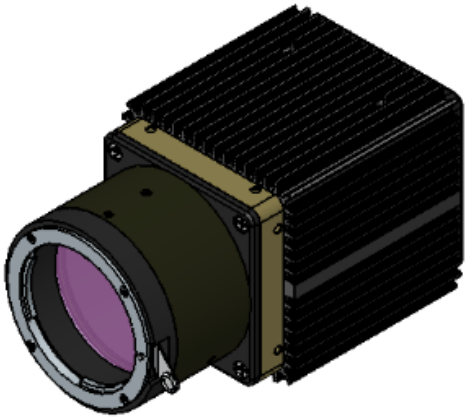

Figure 1.11g – F-mount PoE GigE Vision Output – Dimensional Drawings for PoE-B2021, PoE-B3320, and PoE-B6620.

C – Mount CoaXExpress (CXP) Output

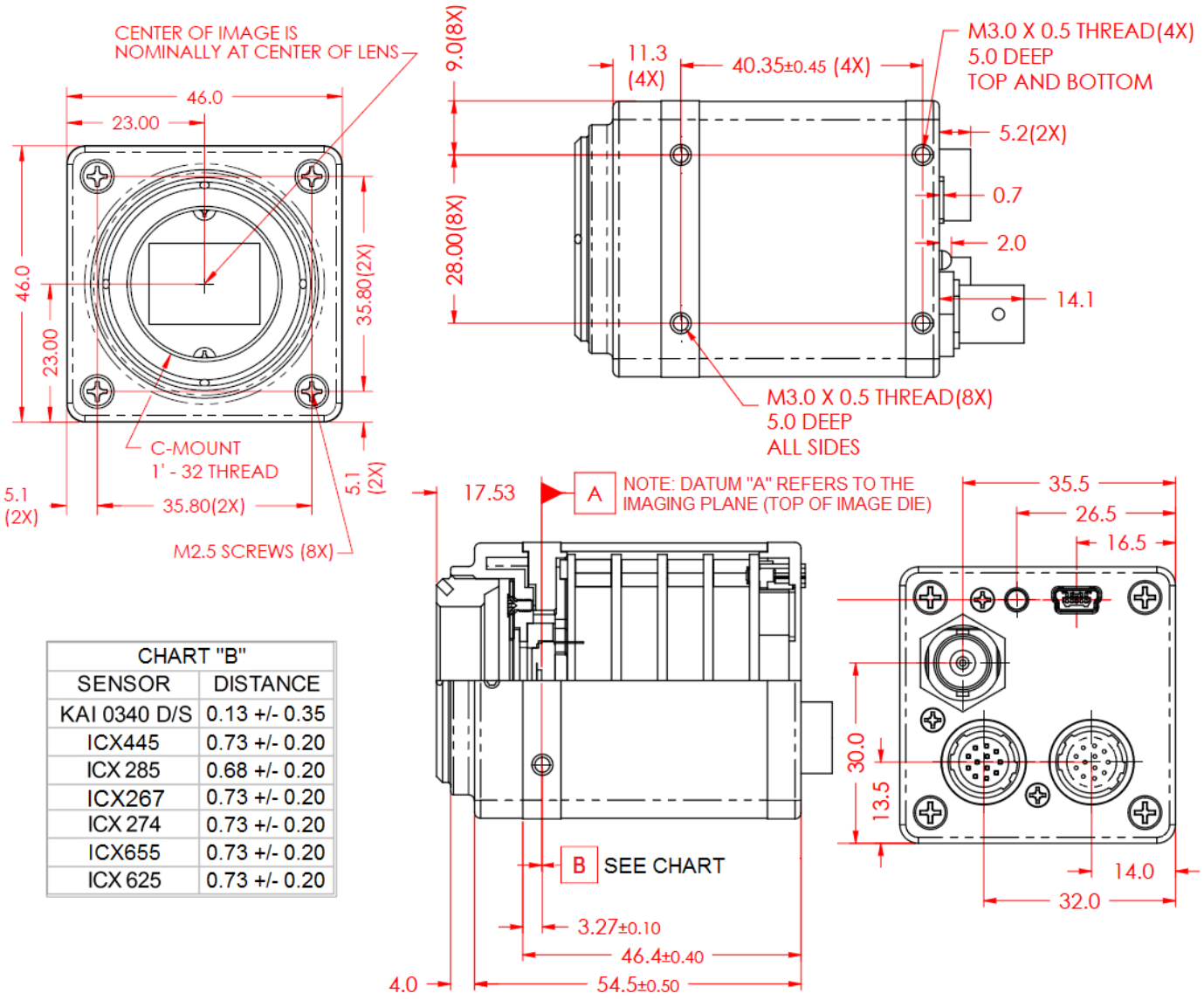

CHART "B"	
SENSOR	DISTANCE
KAI 0340 D/S	0.13 +/- 0.35
ICX445	0.73 +/- 0.20
ICX 285	0.68 +/- 0.20
ICX267	0.73 +/- 0.20
ICX 274	0.73 +/- 0.20
ICX655	0.73 +/- 0.20
ICX 625	0.73 +/- 0.20

Figure 1.12a – C-mount CoaXExpress Output – Dimensional Drawings for CXP-B0610, B0620, B1410, B1610, B2510, and B2520.

C – Mount CoaXExpress (CXP) Output

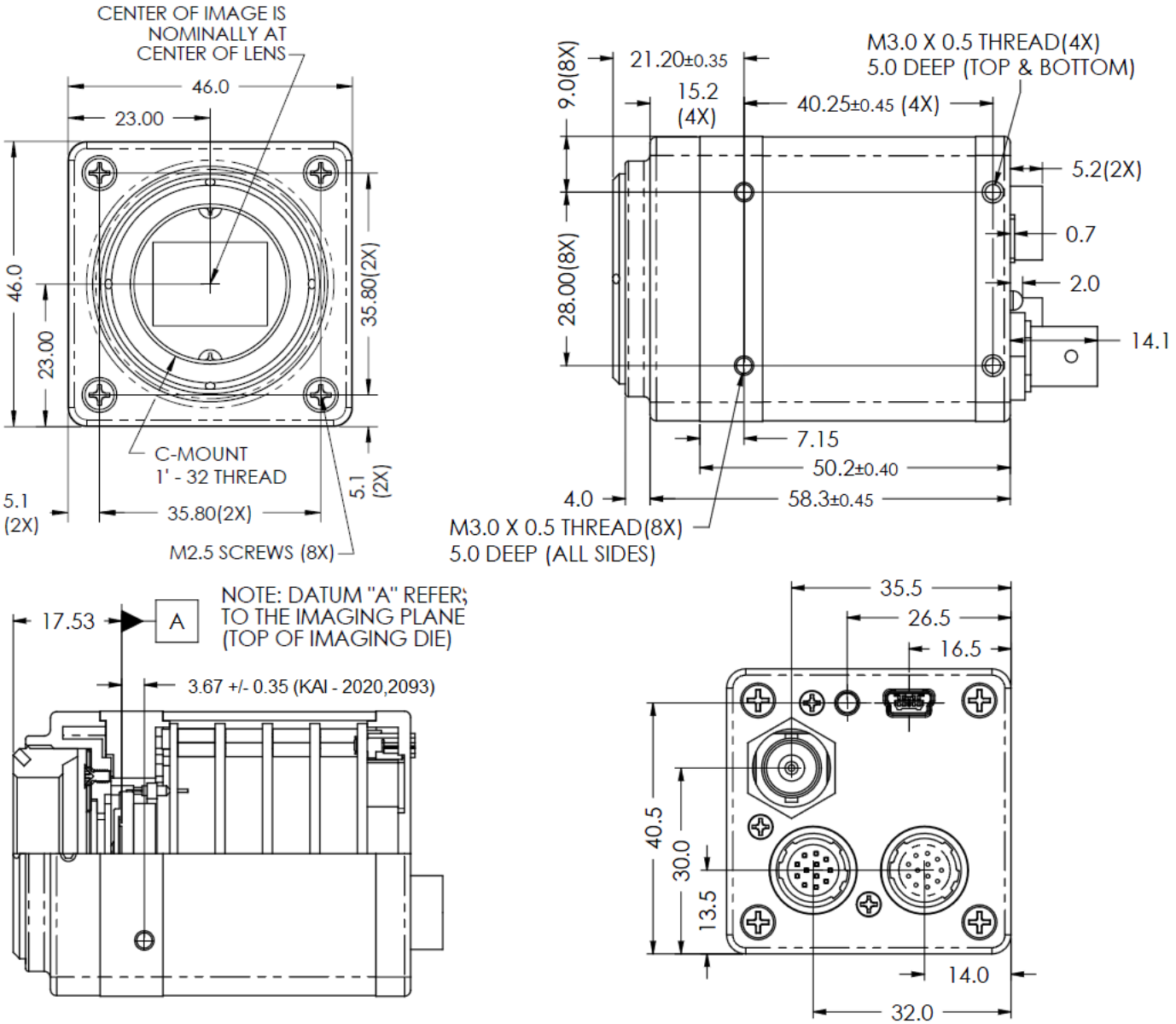

Figure 1.12b – C-mount CoaXExpress Output – Dimensional Drawings for CXP-B1620, and CXP-B1920.

C – Mount CoaXExpress (CXP) Output

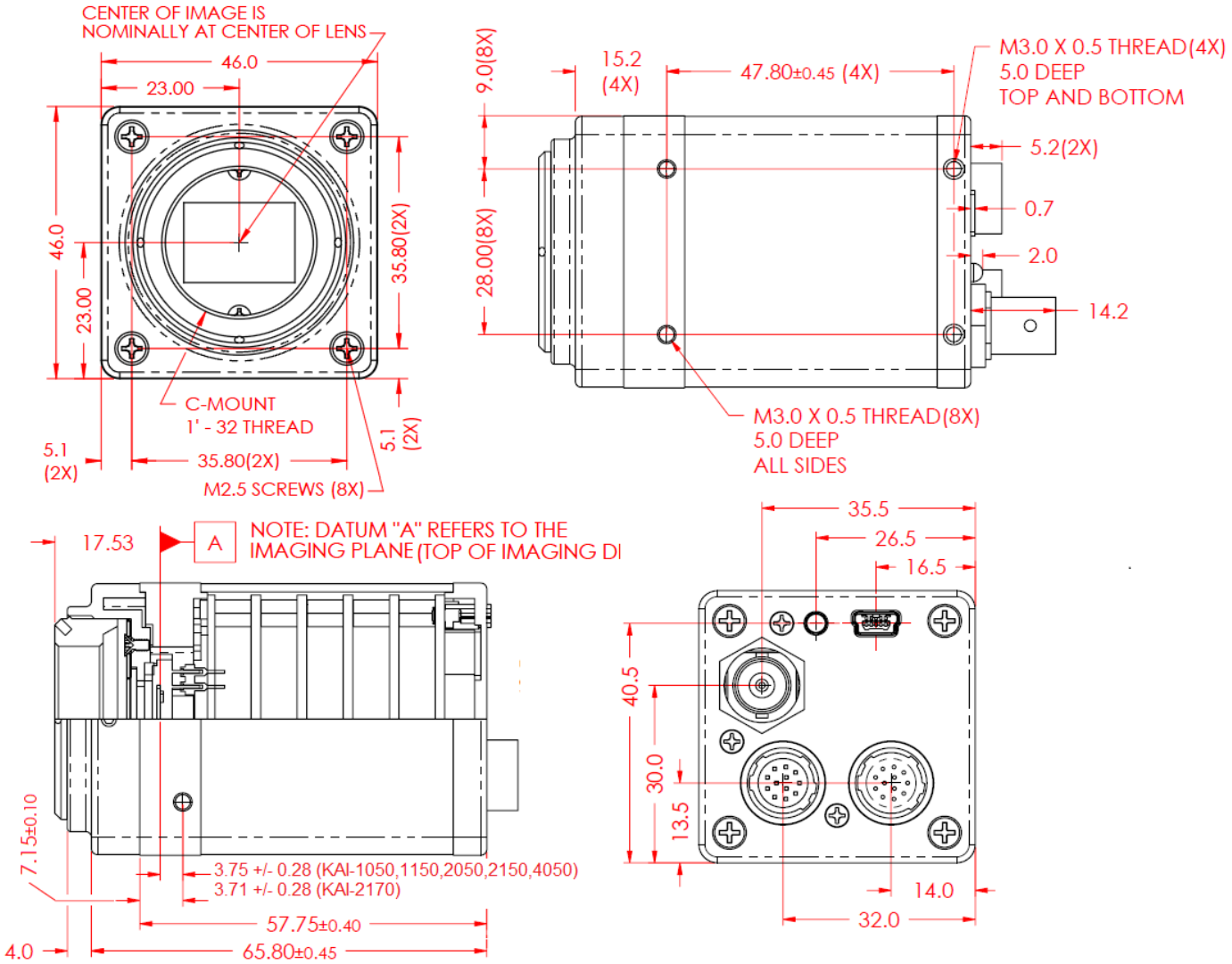

Figure 1.12c – C-mount CoaXExpress Output – Dimensional Drawings for CXP-B1020, B1320, B1621, B1921, B1923, and B2320.

C – Mount CoaXExpress (CXP) Output

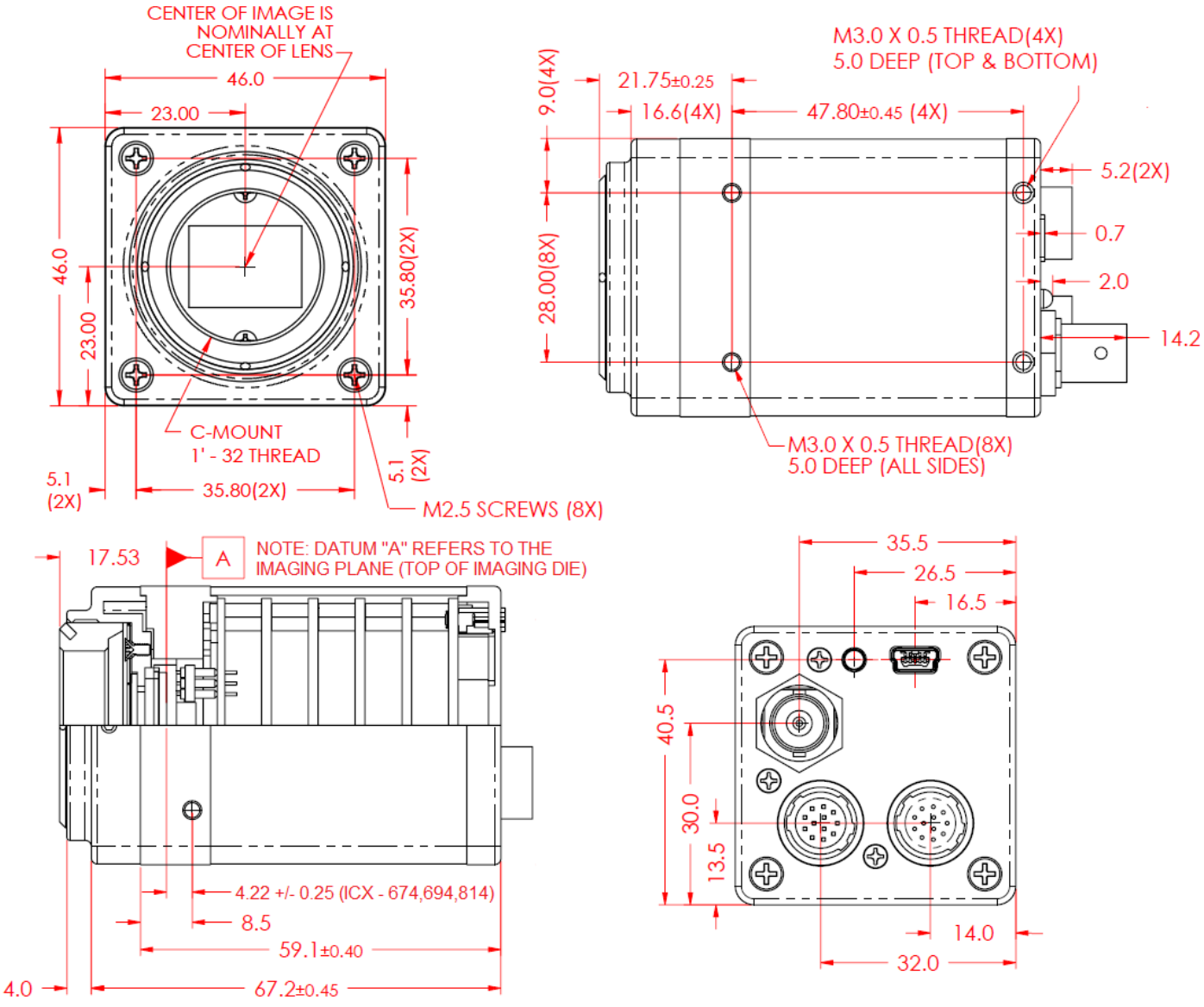

Figure 1.12d – C-mount CoaXExpress Output – Dimensional Drawings for CXP-B1922, CXP-B2720, and CXP-B3420.

F – Mount CoaXExpress (CXP) Output

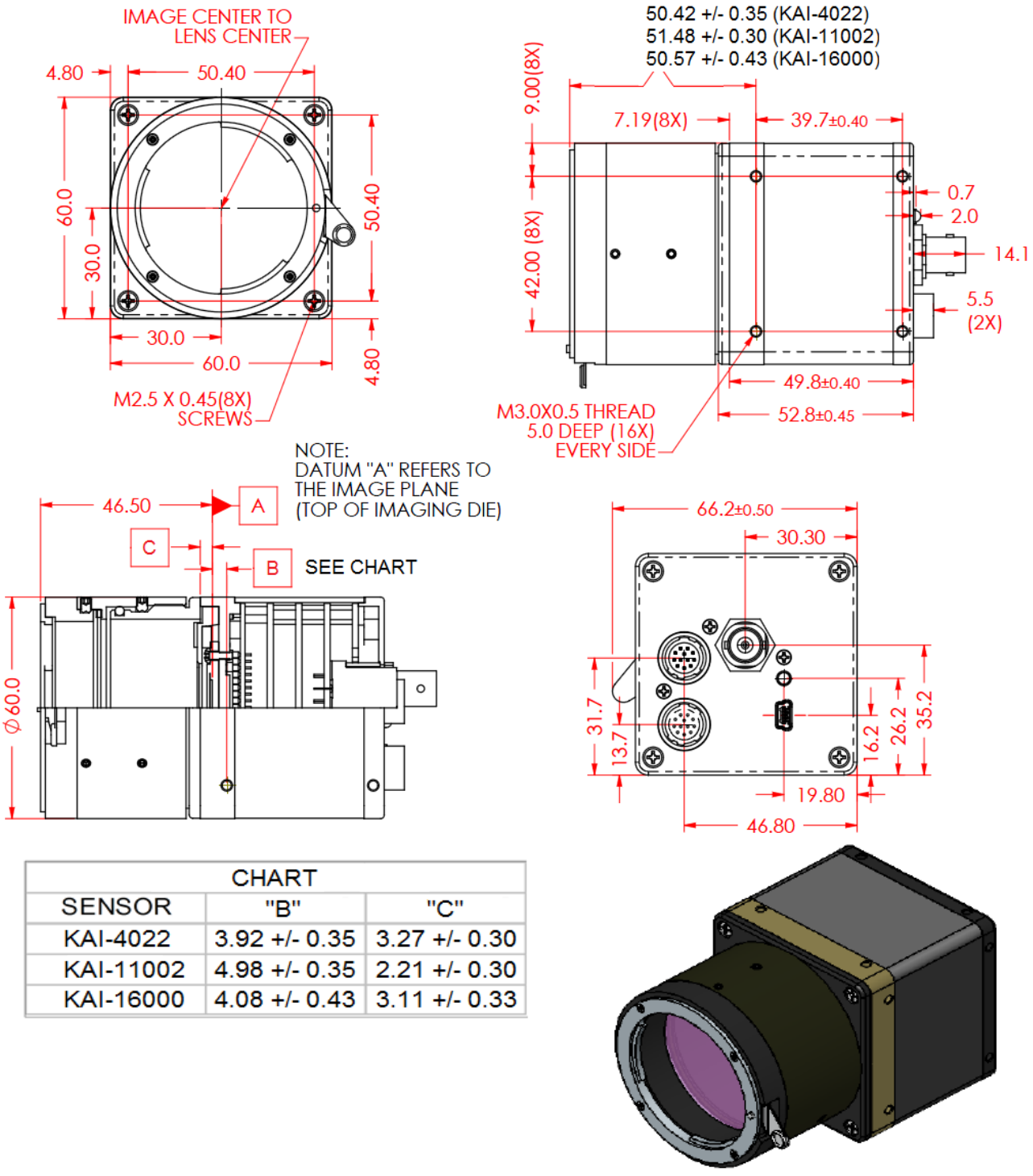

CHART		
SENSOR	"B"	"C"
KAI-4022	3.92 +/- 0.35	3.27 +/- 0.30
KAI-11002	4.98 +/- 0.35	2.21 +/- 0.30
KAI-16000	4.08 +/- 0.43	3.11 +/- 0.33

Figure 1.12e – F-mount CoaXExpress Output – Dimensional Drawings for CXP-B2020, CXP-B4020, CXP-B4820.

F – Mount CoaXExpress (CXP) Output

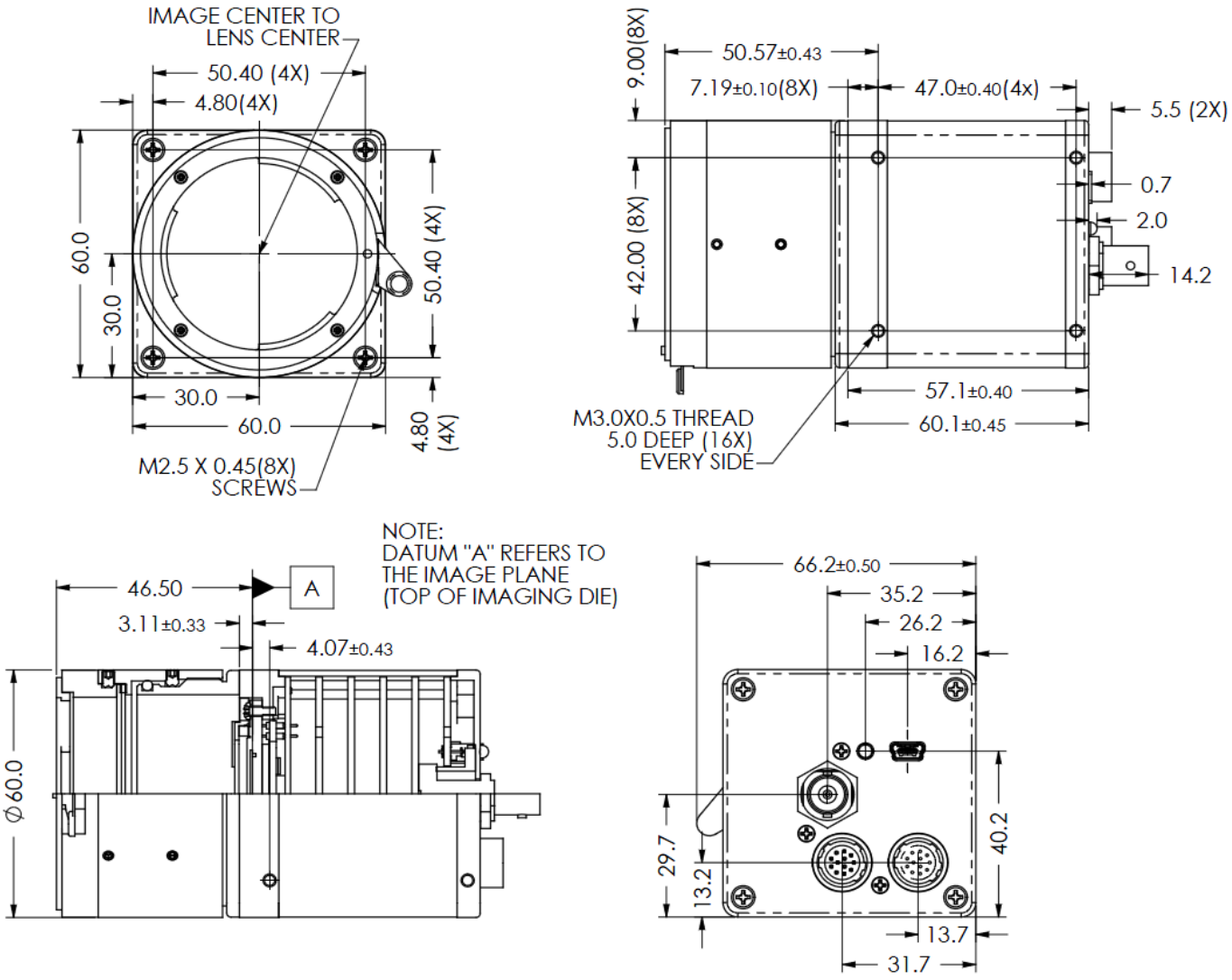

Figure 1.12f – F-mount Camera Link Output – Dimensional Drawings for CXP-B4821, and CXP-B4822.

F – Mount CoaXExpress (CXP) Output

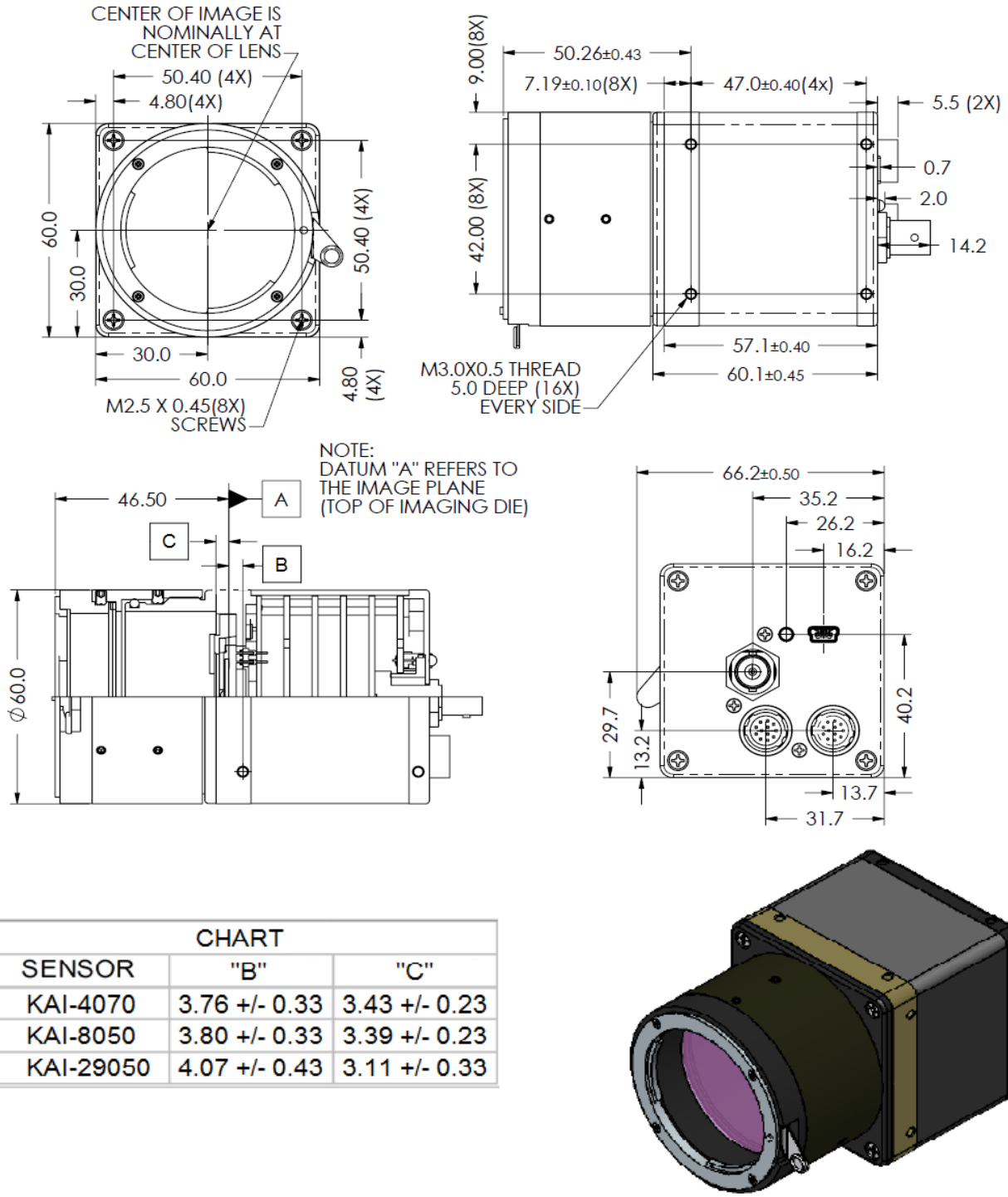

CHART		
SENSOR	"B"	"C"
KAI-4070	3.76 +/- 0.33	3.43 +/- 0.23
KAI-8050	3.80 +/- 0.33	3.39 +/- 0.23
KAI-29050	4.07 +/- 0.43	3.11 +/- 0.33

Figure 1.12g – F-mount CoaXExpress Output – Dimensional Drawings for CXP-B2021, CXP-B3320, and CXP-B6620.

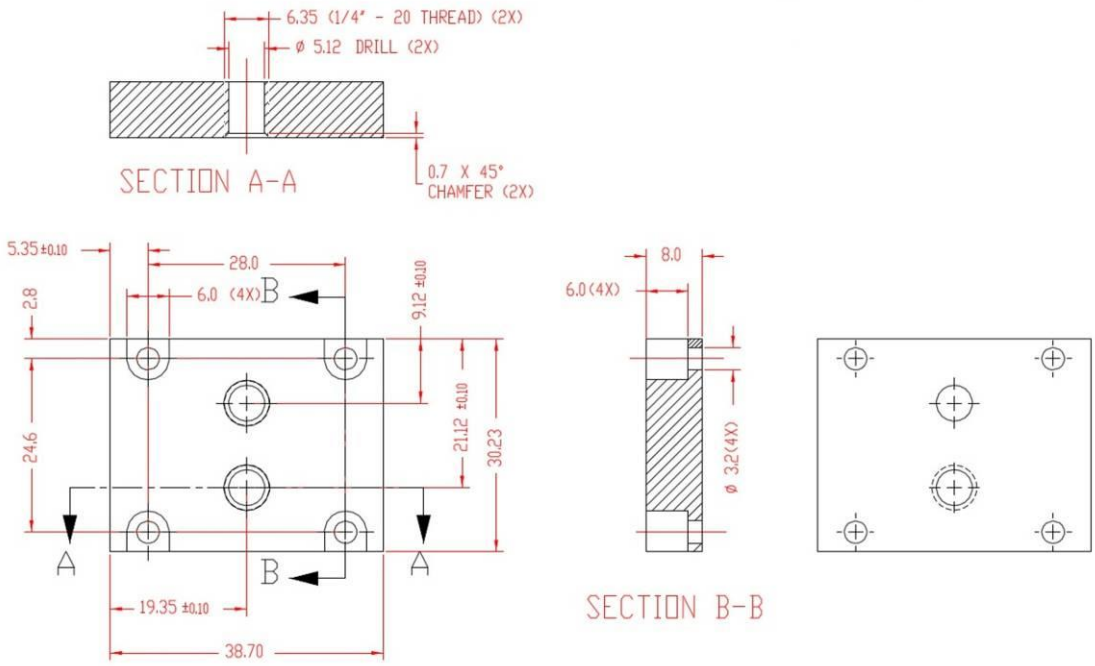

Figure 1.13a – Small Bobcat mounting plate using ¼ in 20 thread.

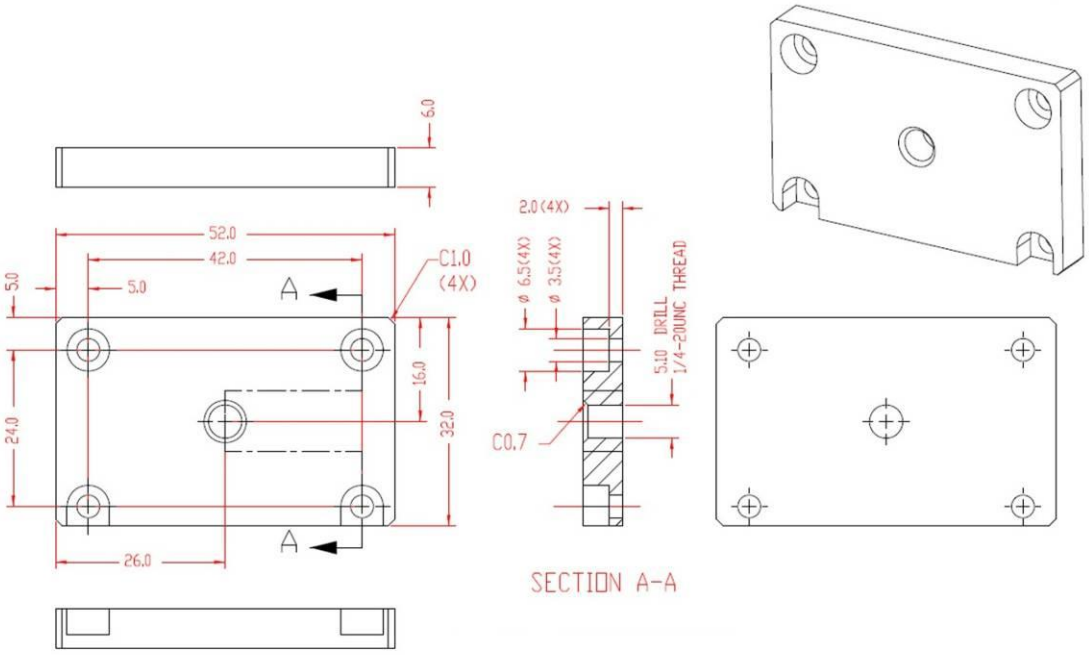

Figure 1.13b – Big Bobcat mounting plate using ¼ in 20 thread.

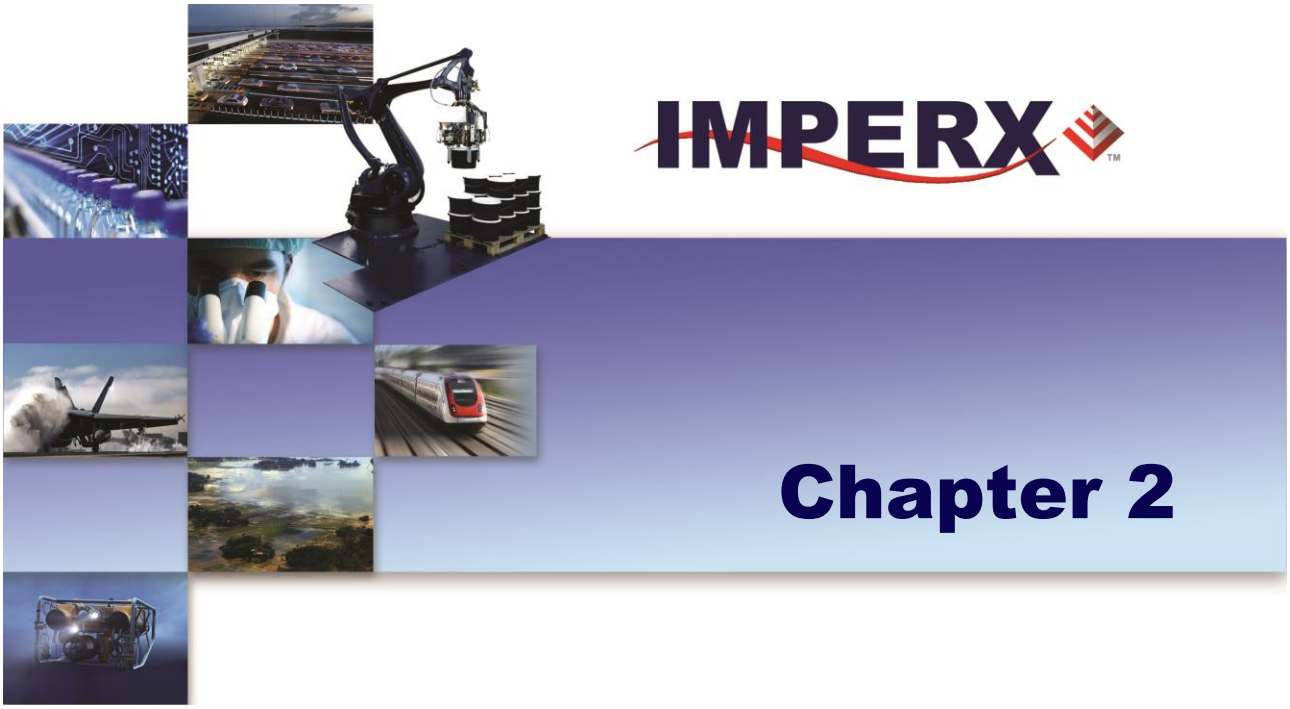

Camera Features

Camera features and their use

2.1 IMAGE RESOLUTION

The image resolution is determined by the number of pixels per line and number of lines per frame. The image is framed by two signals LVAL, enveloping the valid pixels in a line, and FVAL – enveloping the valid lines in a frame. The camera offers two independently selectable LVAL and FVAL sizes. The first LVAL value envelops all visible pixels in a line (active pixels plus buffer pixels) and the second – only the active pixels. Respectively, the first FVAL envelops all visible lines in a frame (active lines and buffer lines), and the second – only the active lines. The camera speed (Frames per Second) is the same for both image size selections. Typically, the pixels outside of LVAL and FVAL (primarily dark pixels and lines) are masked with zeros, but in BOBCAT, the user has an option to mask or not to mask these pixels or lines. Refer to section "BOBCAT Configuration" for more information.

Camera models B0610, B1410and B1610 are available only with a single output. B2520 is available only with dual output. The rest of the models are available in single or dual, in some camera models a high readout mode is available as described below.

2.1.1 Normal Mode – Single Output

When operating in the single output mode, all pixels are shifted out of the HCCD register towards the left video amplifier – Video L (Figure 2.1). The resulting image has a normal orientation.

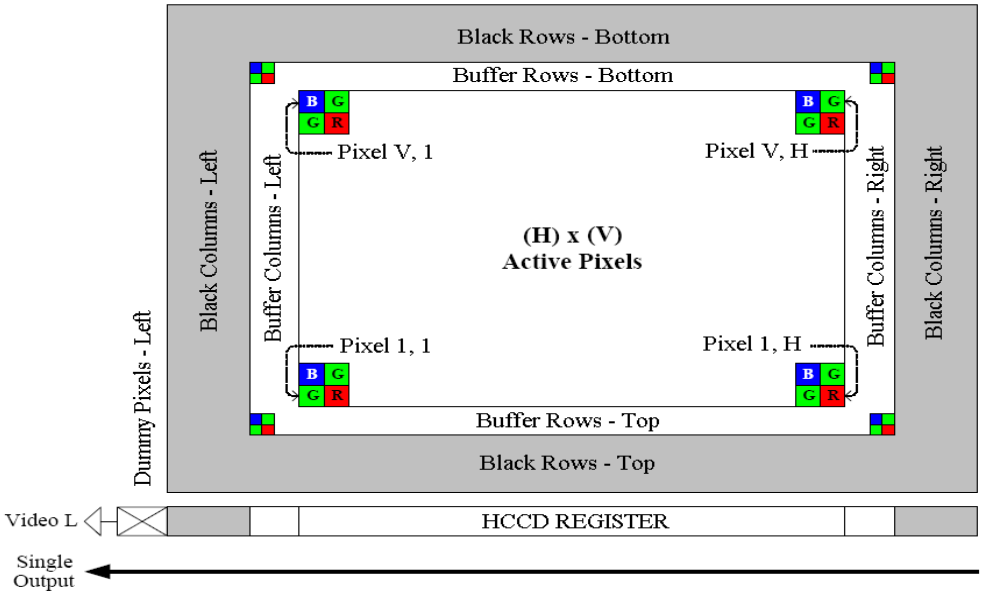

Figure 2.1 – Single output mode of operation.

2.1.2 Normal Mode – Dual Output

When operating in a dual output mode, the image is split in two equal parts, each side consisting of half of the horizontal pixels and the full vertical lines. The first (left) half of the pixels are shifted out of the HCCD register towards the left video amplifier – Video L, while the second (right) half of the pixels are shifted towards the right video amplifier – Video R (Figure 2.2). In the horizontal direction, the first half of the image appears normal and the second half is left/right mirrored. The camera reconstructs the image by flipping the mirrored portion and rearranging the pixels. Dual output is the default factory mode of operation – refer to the Configuration Memory section. The image resolutions for different cameras are shown in Table 2.1, and a frame rates – in Table 2.2.

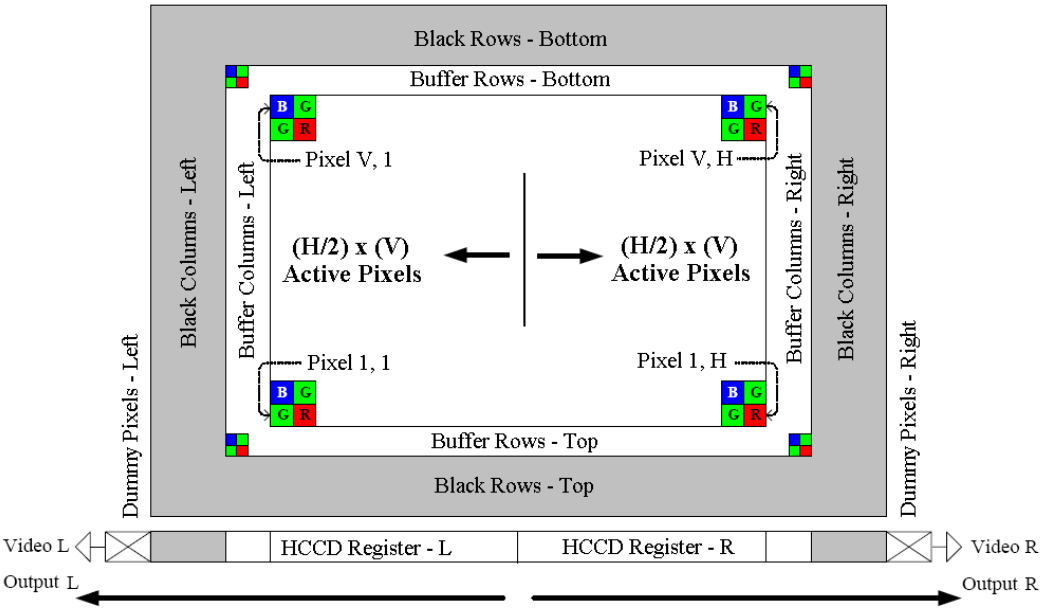

Figure 2.2 – Dual output mode of operation.

2.1.3 Normal Mode – Quad Output

When operating in a quad output mode, the image is split into four equal quadrants, each quadrant consisting of half of the horizontal pixels and half the vertical lines. In the first quadrant (bottom left), half of the pixels are shifted out of the HCCD register towards the bottom left video amplifier – VOUTa, while the remaining quadrants are shifted towards their respective video amplifiers – VOUTb,VOUTc, and VOUTd (Figure 2.3). In the horizontal direction, the left side quadrants appear normal and the right-side quadrants are left/right mirrored. In the vertical direction, the top two quadrants appear normal and the bottom two quadrants are vertically mirrored. The camera reconstructs the image by flipping the mirrored quadrants and rearranging the pixels. Quad output is the only mode of operation for the quad cameras – refer to the Configuration Memory section. The image resolutions for the quad cameras are shown in Table 2.1, and a frame rates – in Table 2.3.

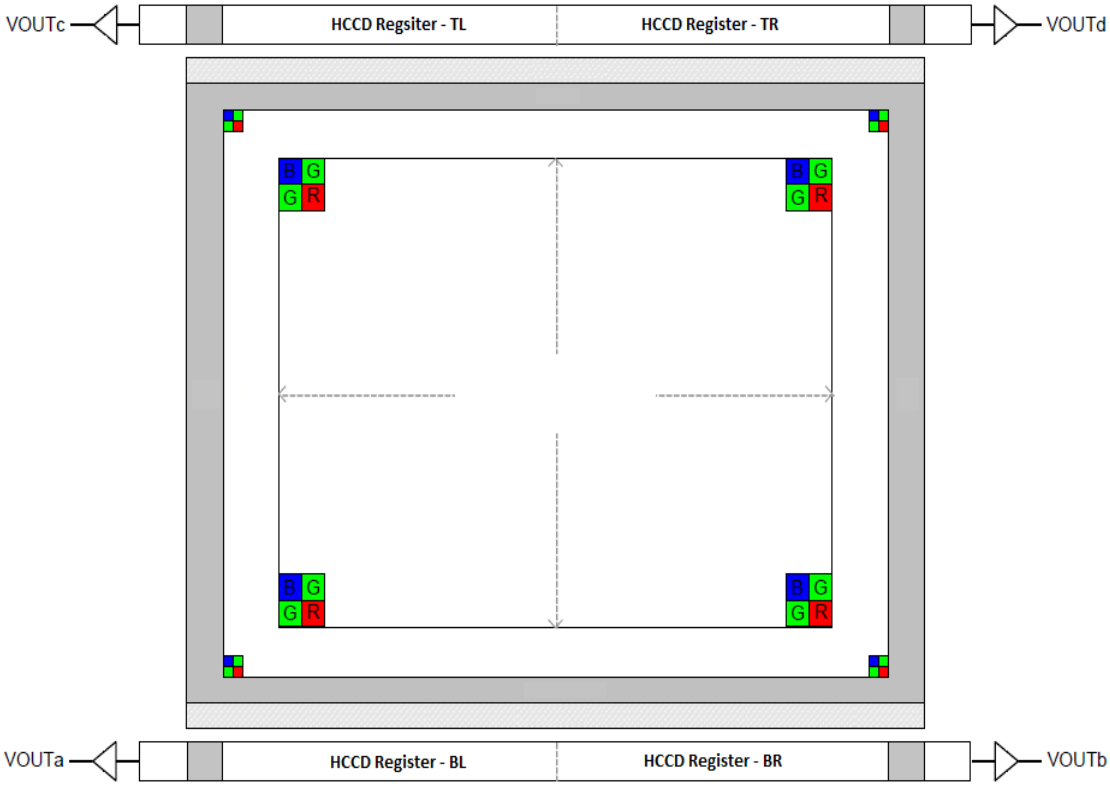

Figure 2.3 – Quad output operation.

2.1.4 Center Mode

A. B0610 and B0620 Models

The 'center columns' output mode is available in the B0610 and B0620 camera models. In this mode, the image field a reduced number of horizontal pixels located in the center of the imager. When operating in a single output mode, all pixels are shifted out of the HCCD register towards the left video amplifier – Video L (Figure 2.4a). The resulting image has a normal orientation. When operating in a dual output mode, the image is split in two equal parts, and full vertical lines. The first (left) half of the pixels are shifted out of the HCCD register towards the left video amplifier – Video L, while the second (right) half of the pixels is shifted towards the right video amplifier – Video R (Figure 2.4a). In the horizontal direction, the first half of the image appears normal and the second half is left/right mirrored. The camera reconstructs the image by flipping the mirrored portion and rearranging the pixels. The image resolutions for different cameras are shown in Table 2.1, and a frame rates – in Table 2.2.

CAUTION NOTE

1. Only 1x, 2x Vertical and 1x, 2x Horizontal binning can be performed when Center mode is used for B0610 and B0620. No Fast Dump support if 2x Vertical binning is enabled.
2. When Center mode is enabled, the maximum number of lines is 480.
3. Due to image artifacts B0620, in the Center mode the image is reduced to 224 pixels.

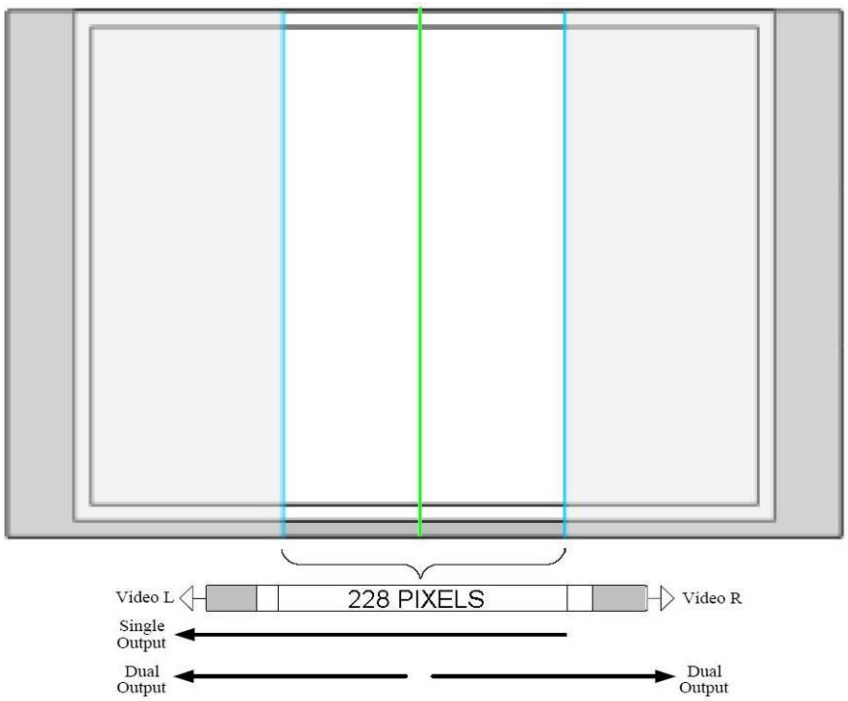

Figure 2.4a – Center columns output mode of operation.

B. B1320, B1410, B1411, B1610 and B2520 Models

To achieve a higher frame rate B1320, B1410, B1411, B1610 and B2520 camera models can provide a fast readout, where every image is sub-sampled – 2 out of 8 lines/pixels are read out of the CCD – Figure 2.6. The image resolutions for different cameras are shown in table 2.1a, and a frame rates – in Table 2.2.

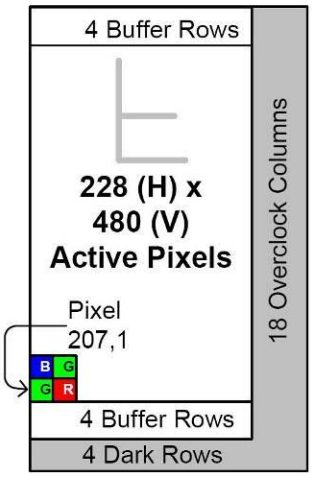

Figure 2.4b – Center columns output in dual mode of operation.

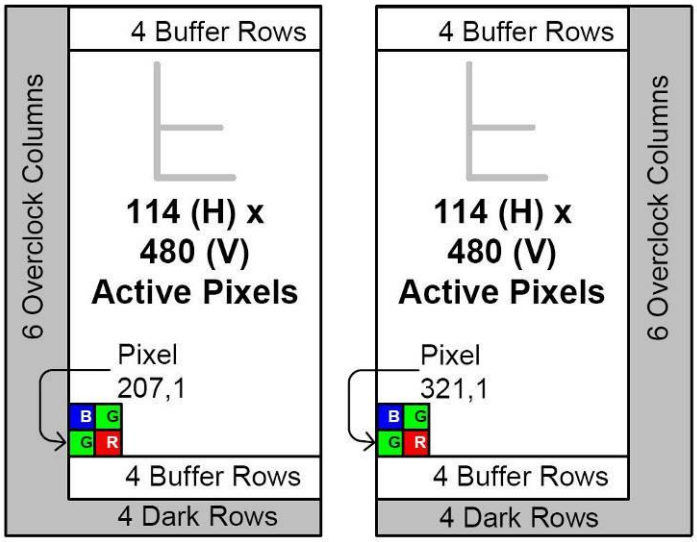

Figure 2.5 – Center columns output in dual tap mode.

CAUTION NOTE

1. Vertical and horizontal binning cannot be performed when the Center mode is used for B1410, B1610 and B2520.
2. Currently there is no support for center mode for B2520. Please contact IMPERX if you need this feature enabled.

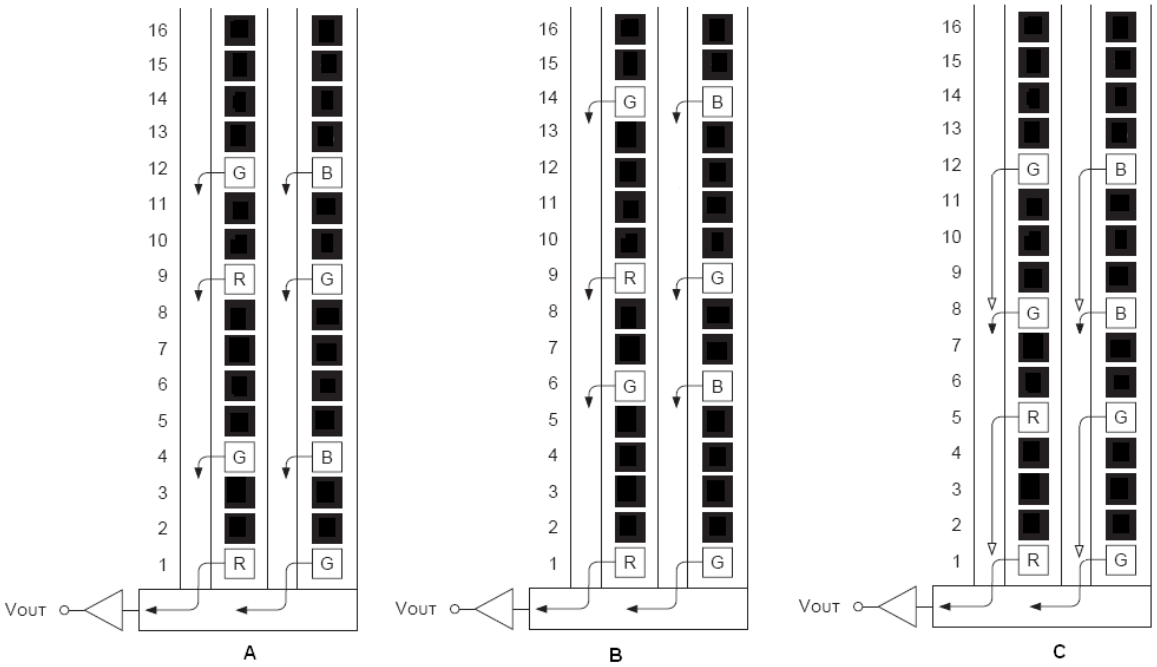

Figure 2.6 – Sub-sampled CCD output.
(a – B1410, b – B1610, c – B2520)

Camera	Normal Mode		Center Mode	Output
	Effective Image	Active Image	Active Image	
B0610	648 x 488	640 x 480	228 x 488/480	Single
B0620	648 x 488	640 x 480	224 x 488/480	Single, Dual
B1020	1032 x 1032	1024 x 1024	N/A	Single, Dual
B1040	1032 x 1032	1024 x 1024	N/A	Quad
B1410	1392 x 1040	1360 x 1024	348/340 x 259/256	Single
B1411	1392 x 1040	1360 x 1024		Single
B1610	1628 x 1236	1620 x 1220	407/405 x 309/305	Single
B1620	1608 x 1208	1600 x 1200	N/A	Singe, Dual
B1621	1632 x 1232	1600 x 1200		Single, Dual
B1641	1632 x 1232	1600 x 1200		Quad
B1920	1928 x 1084	1920 x 1080	N/A	Single, Dual
B1921	1960 x 1120	1920 x 1080		Single, Dual
B1922	1940 x 1460	1932 x 1452		Single, Dual
B1923	TBD	TBD		Single, Dual
B1941	1960 x 1120	1920 x 1080		Quad
B1942	1940 x 1460	1932 x 1452		Quad
B2020	2056 x 2060	2048 x 2048	N/A	Single, Dual
B2320	2360 x 1776	2336 x 1752		Single, Dual
B2340	2360 x 1776	2336 x 1752		Quad
B2510	2456 x 2058	2448 x 2050		Single
B2520	2456 x 2058	2448 x 2050	N/A	Dual
B3320	3320 x 2496	3296 x 2472		Single, Dual
B3340	3320 x 2496	3296 x 2472		Quad
B4020	4032 x 2688	4008 x 2672	N/A	Single, Dual
B4820	4904 x 3280	4872 x 3248	N/A	Single, Dual
B4821	4920 x 3288	4896 x 3264		Single, Dual
B4822	4888 x 3256	4864 x 3232		Single, Dual
B4841	4920 x 3288	4896 x 3264		Quad
B4842	4888 x 3256	4864 x 3232		Quad
B6620	6600 x 4400	6576 x 4384	N/A	Single, Dual
B6640	6600 x 4400	6576 x 4384	N/A	Quad

Table 2.1 – Image resolutions for different modes

2.2 FRAME TIME CONTROL

2.2.1 Internal Line and Frame Time Control

The camera speed (frame rate) depends on the CCD "read-out" time – the time necessary to read all the pixels out of the CCD imager. The frame rate can be calculated using the following Formula 1.1:

Frame rate [fps] = 1 / read-out time [sec] (1.1)

The user can program the camera to run slower than the nominal speed preserving the camera full resolution. The user can independently extend the camera line time (the time required to read one line out of the CCD imager) and camera frame time (the time required to read the entire frame out of the CCD imager). The camera line time can be extended to ~ 200 us, with a precision ~ 25 ns. The camera frame time can be extended to ~ 16 sec, with a precision of ~ 1.0us. Please refer to "EXPOSURE CONTROL" section for more information.

CAUTION NOTE

It is not recommended to use the Programmable Line Time feature when Vertical Binning higher than 2x is used!

2.2.2 Camera Speed Control

BOBCAT camera series provides a unique way to control and increase the camera nominal (free-running) speed. The user can select (Slow) or (Fast) camera speed. The "Slow" speed is the camera nominal frame rate as determined by the CCD manufacturer. Since BOBCAT internal design is optimized for higher clock rates, it is possible to over-clock the camera (use an internal clock higher than the recommended one), which will result in higher (~ 20%) frame rate. Special measures have been taken in order to preserve the camera performance when over-clock mode is used. The possible frame rates are shown in Table 2.2, where the camera speed is the shown in [FPS)]. The first number represents the "Slow" speed, and the second – "Fast" speed.

camera	Normal Mode		Center Mode	
	Single Out	Dual Out	Single Out	Dual Out
B0610	110/137 fps	N/A	293 fps	N/A
B0620	110/137 fps	208/260 fps	293/366 fps	539/674 fps
B1020	32/40 fps	60/74	N/A	N/A
B1310	26/39 fps	N/A	N/A	N/A
B1320	36/45 fps	N/A	68/85 fps	N/A
B1410	23/30 fps	N/A	67/80 fps	N/A
B1411	23/30 fps	N/A	74/90 fps	N/A
B1610	17/25 fps	N/A	53/74 fps	N/A
B1620	19/23 fps	35/44 fps	N/A	N/A
B1621	18/22 fps	34/42 fps	N/A	N/A
B1920	17/22 fps	33/41 fps	N/A	N/A
B1921	17/21 fps	31/39 fps	N/A	N/A
B1922	17/21 fps	20/27 fps	N/A	N/A
B1923	TBD	TBD	N/A	N/A
B2020	8.6/10.8 fps	16.3/20.4 fps	N/A	N/A
B2320	8.7/10.8 fps	16.4/20.6 fps	N/A	N/A
B2510	6/8 fps	N/A	N/A	N/A
B2520	N/A	11/16 fps	N/A	N/A
B3320	4.4/5.6 fps	8.5/10.6 fps	N/A	N/A
B4020	2.6/3.4 fps	4.8/6.5 fps	N/A	N/A
B4820	1.7/2.3 fps	3.2/4.3 fps	N/A	N/A
B4821	1.6/1.9 fps	3.1/4.2 fps	N/A	N/A
B4822				
B6620	1/1.2 fps	1.8/2.4 fps	N/A	N/A

Table 2.2 – Frame rates for different modes

Camera	Quad Output
B1040	
B1340	
B1641	
B1941	62/78 fps
B1942	40/54 fps
B2340	16/21 fps
B3340	17.05/21.3 fps
B4841	6.6/8.8 fps
B4842	5.9/7.9 fps
B6640	3.5/4.7 fps

Table 2.3 – Frame rates for quad output cameras

CAUTION NOTE

1. Changing the camera speed involves changing the output data clock frequency. Not all frame-grabbers can automatically adapt to the new data clock. To prevent any loss of data or synchronization, it is recommended to stop or pause the data acquisition prior to changing the camera speed.

2.2.3 External Line and Frame Time Control

The camera speed (frame rate) can be controlled using external sync pulses. The camera line time can be slaved to an external H-Sync pulse, and the camera frame time can be slaved to an external V-Sync pulse. The camera can be slaved to one or both pulses. The H-Sync and V-Sync has to be mapped to corresponding camera input. For more information, please refer to the I/O Control section.

2.3 REGION OF INTEREST

2.3.1 Horizontal and Vertical Window

For some applications, the user may not need the entire image, but only a portion of it. To accommodate this requirement BOBCAT provides total of 8 (eight) Horizontal and Vertical Areas of Interest (AOI) – one Master, 6 Slave and one Processing. The starting and ending point for each AOI can be set independently in horizontal direction (Horizontal Window) and vertical direction (Vertical Window), by setting the window (H & V) offset and (H & V) size – Figure 2.7. The minimum window size is one pixel/line for single mode and two pixels/lines for dual mode. The maximum horizontal window size (H) and the vertical window size (V) are determined by image full resolution as shown in Table 2.1, and the selected size of LVAL and FVAL.

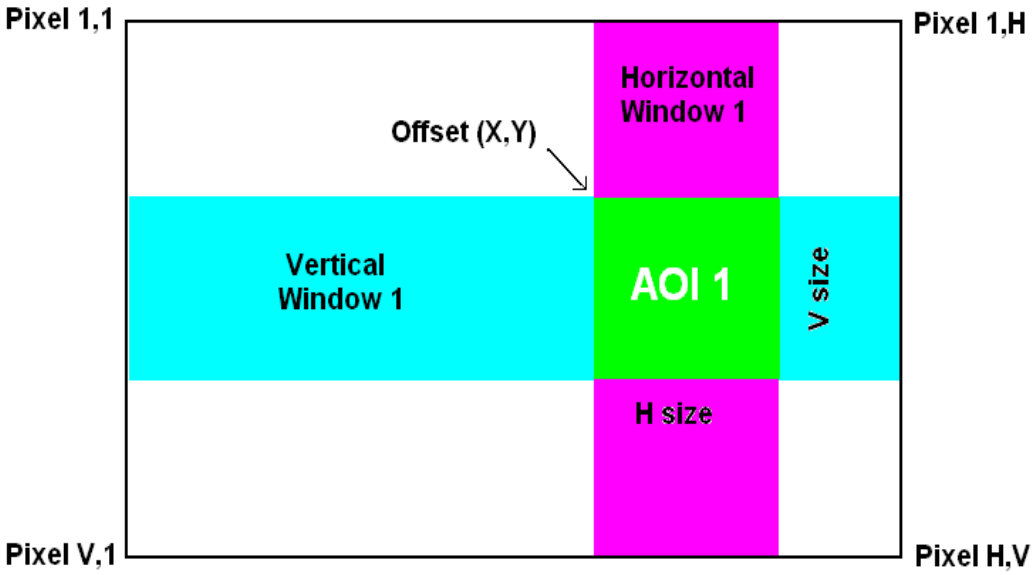

Figure 2.7 – Horizontal and vertical window positioning.

A. Master AOI (MAOI)

The MAOI can be set to preserve or to change the camera frame rate. When the user wants to preserve the camera frame rate, the MAOI settings will control only the image H & V dimensions. When the user wants to take advantage of the reduced vertical image size and increase the camera frame rate, the image maximum camera speed will be determined by the V size of this MAOI. The image resolution will reflect the MAOI H & V settings.

B. Slave AOIs

AOI1 to AOI6 are assigned as slave AOIs and they MUST be selected so they are completely inside MAOI. All slave AOIs can be set independently with no restrictions for overlapping and order – Figure 2.8. In addition, each AOI can be included or excluded from the MAOI. In figure 2.8 AOI2 to AOI6 are included in MAOI and AOI1 is excluded. The slave AOIs can be enabled in random order and based on include/exclude selection can be inside each other.

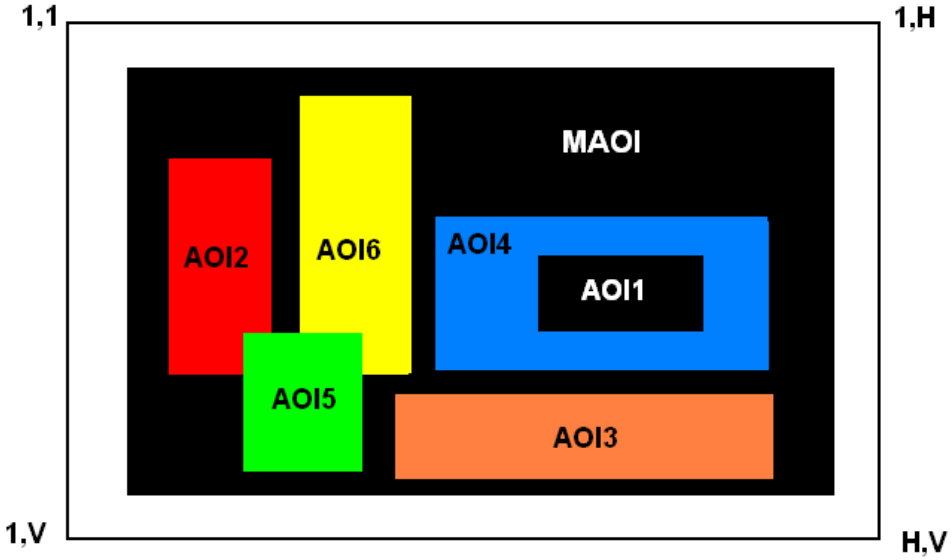

Figure 2.8 – Slave AOIs.

C. Processing AOI (PAOI)

All AOIs are functionally equal except PAOI. PAOI can be enabled as LUT or image processing Region of Interest (ROI). When enabled as LUT ROI, the LUT function will apply only to the selected ROI, all data outside of the region will not be processed with the LUT function. When enabled as processing ROI, the selected processing function will apply only to the selected ROI, all data outside of the region will not be processed with the selected function – Figure 2.9.



Figure 2.9 – PAOI enabled as processing ROI.
(All data within the selected ROI are processed with "One Point Correction", all data outside of the ROI are not processed)

CAUTION NOTE

1. If the user needs to enable AOI1 to AOI6 MAOI **MUST** be enabled.
2. To qualify the selected pixels/lines MAOI uses DVAL, where DVAL is high within the selected MAOI. The frame-grabber horizontal and vertical resolutions must be adjusted for each window size.
3. When MAOI is enabled the "Number of Lines" selection is disabled. To change the "Number of Lines", please disable MAOI first, change the "Number of Lines" and them enable MAOI again.
4. Horizontal and vertical windows can be enabled in all camera modes, including H & V binning. Refer to binning section for more information.
5. The size of the horizontal window does not affect the camera frame rate, the vertical window does, but only if "Keep Frame Rate" is not enabled.
6. For dual tap mode of operation, the horizontal Offset and Width must be even number.
7. For **B1920** the minimum "Horizontal Offset" is **10** pixels when "Constant Frame Rate" is disabled, and **0** pixels when "Constant Frame Rate" is enabled.
8. Positioning the horizontal and vertical window size outside the maximum image window will result in an error.
9. Color version users – when MAOI is enabled, for proper color reconstruction and WB 'Offset X' and 'Offset Y' must be an even number.

2.3.2 Calculating the Frame Rate using Vertical Window

When camera frame rate changes with the size of the vertical window, the resulting frame rate (FR) for each camera is shown on figure 2.10a – 2.10fg. The camera uses an adaptive algorithm for the frame rate change, so it is difficult to put a simple formula for the frame rate calculation. The camera will calculate and display the actual frame rate at any vertical window selection.

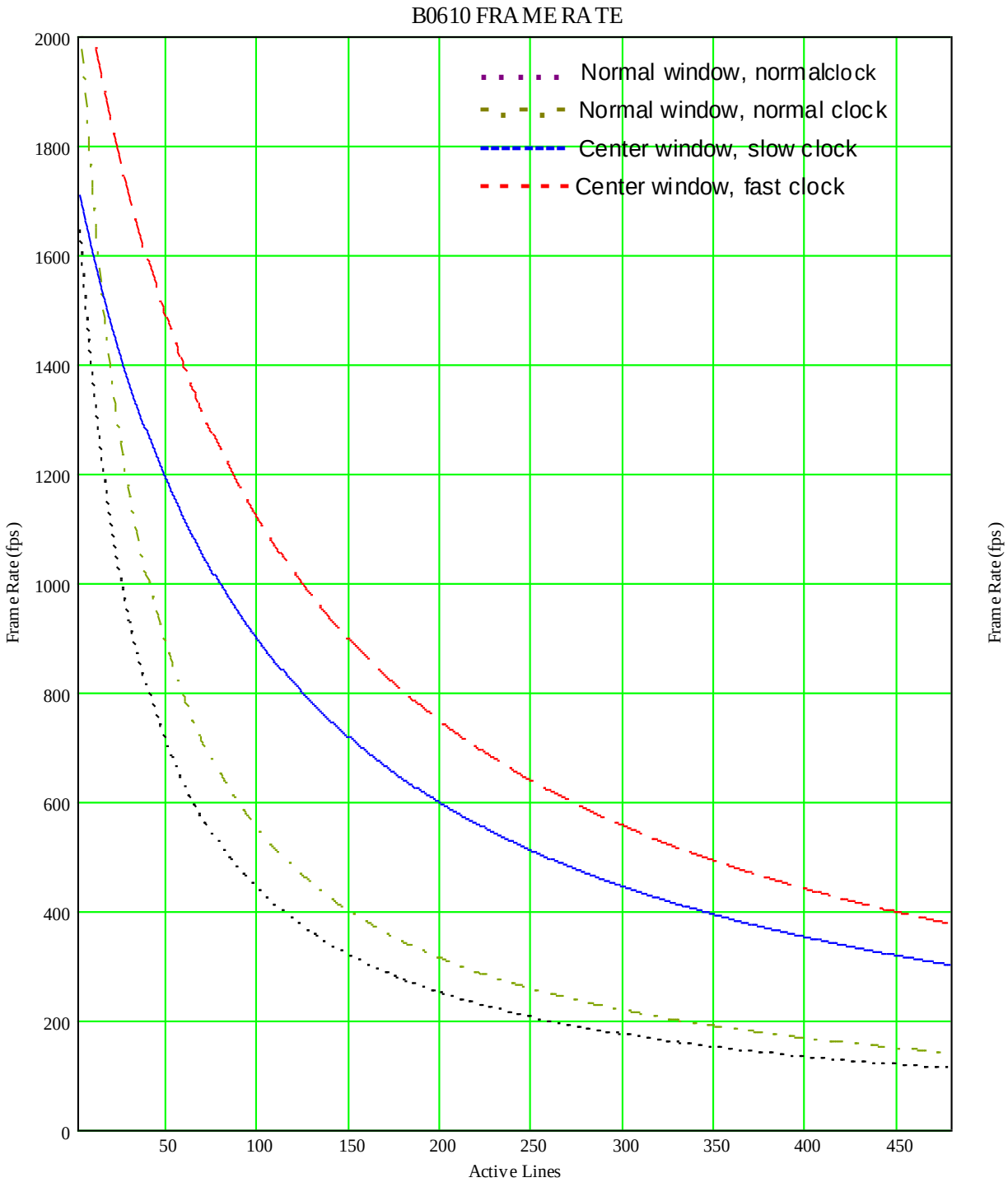

Figure 2.10.1a – Frame rate vs. vertical window size for B0610

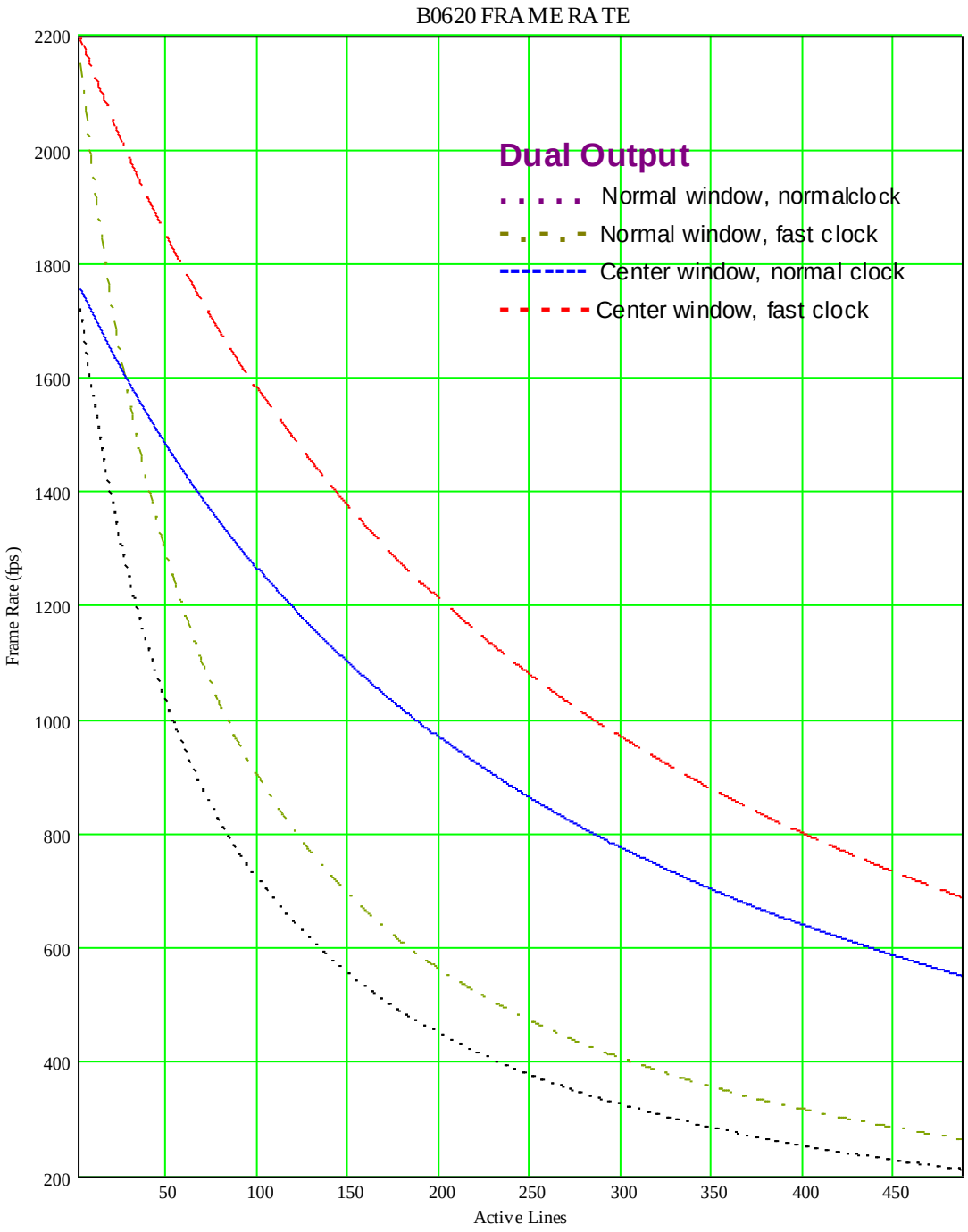

Figure 2.10.1b – Frame rate vs. Vertical window size for B0620

This figure shows the speed in dual output only. The speed in single output is identical to B0610 – Figure 2.10a.

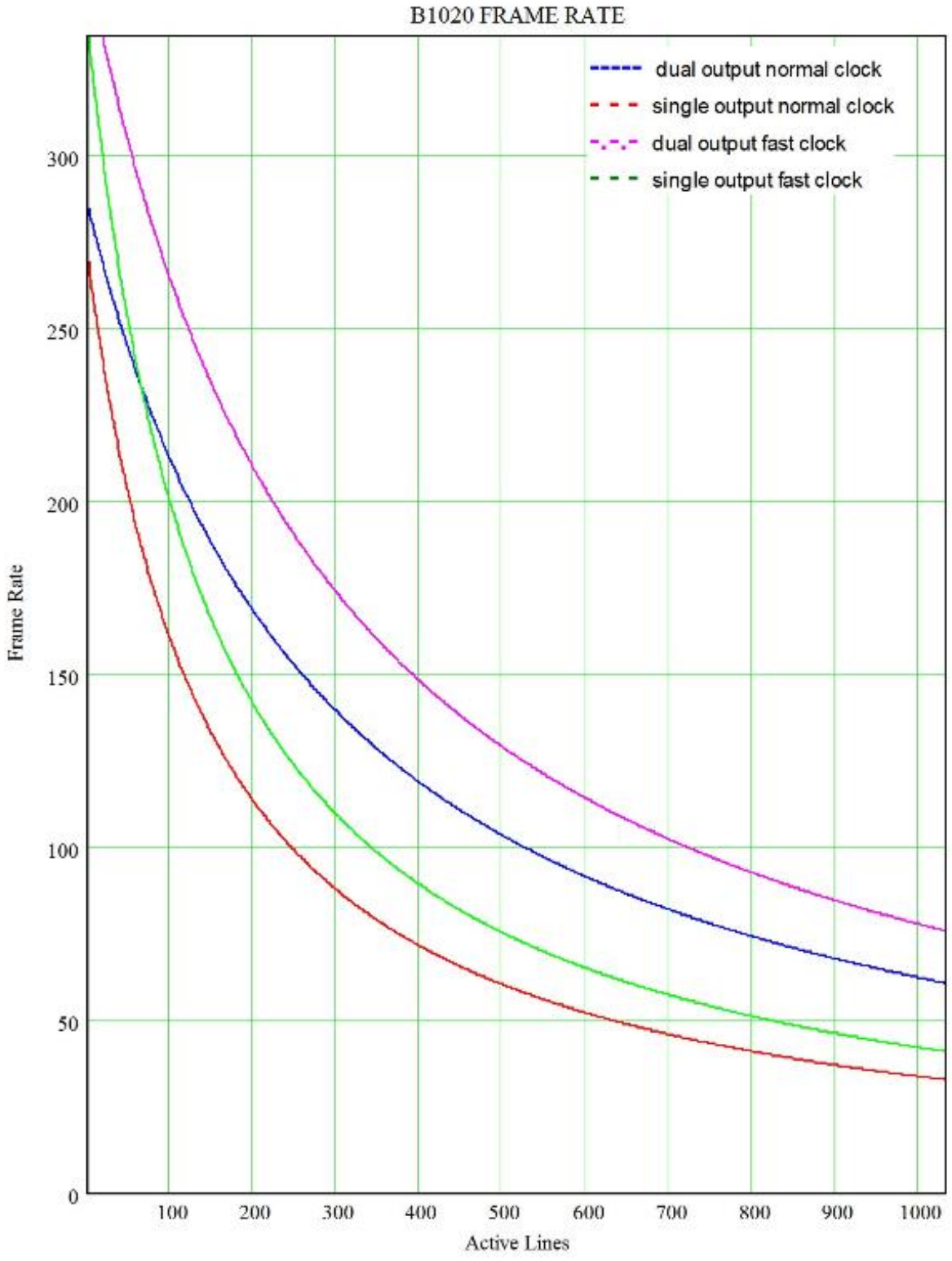

Figure 2.10.1c – Frame rate vs. Vertical window size for B1020

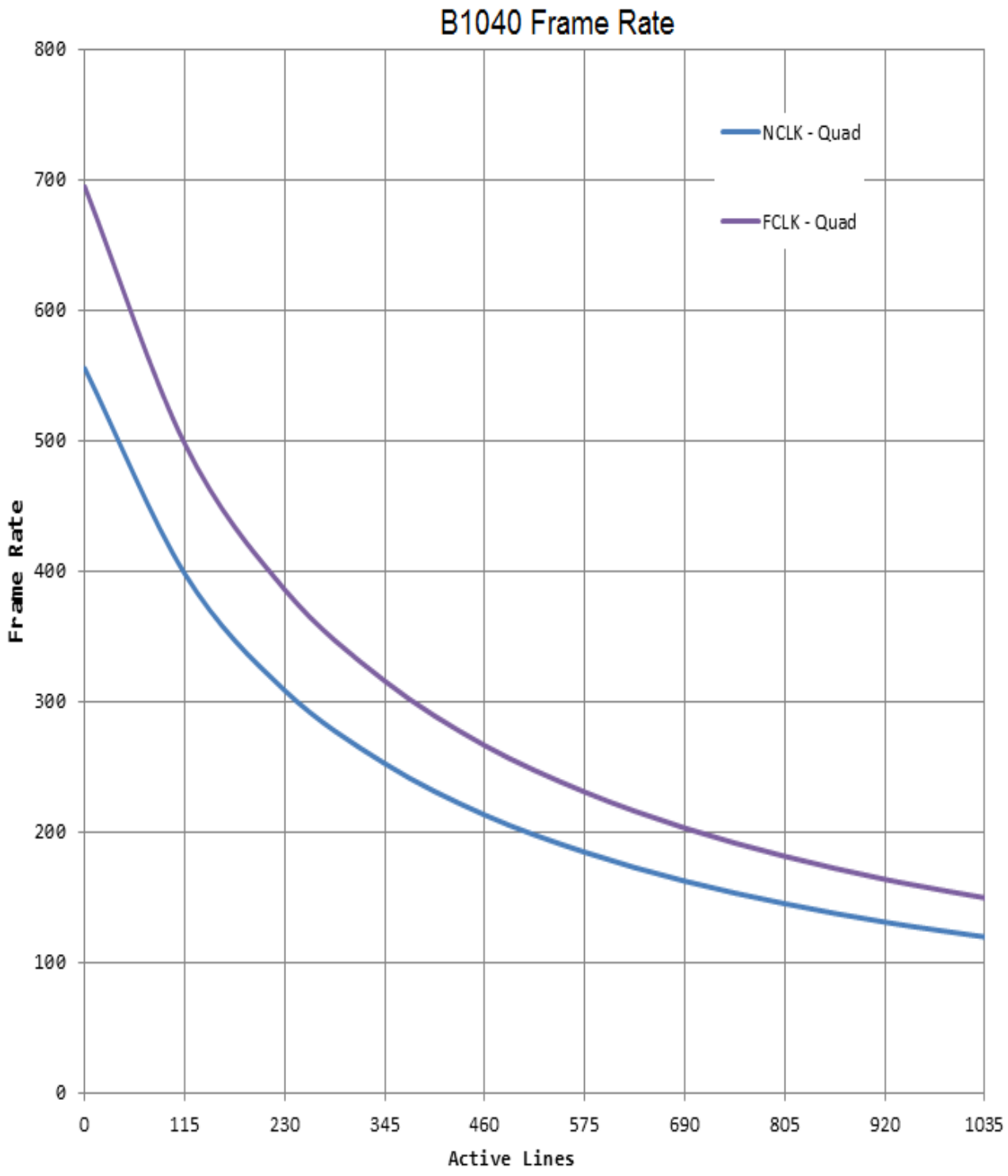

Figure 2.10.1d – Frame rate vs. Vertical window size for B1040

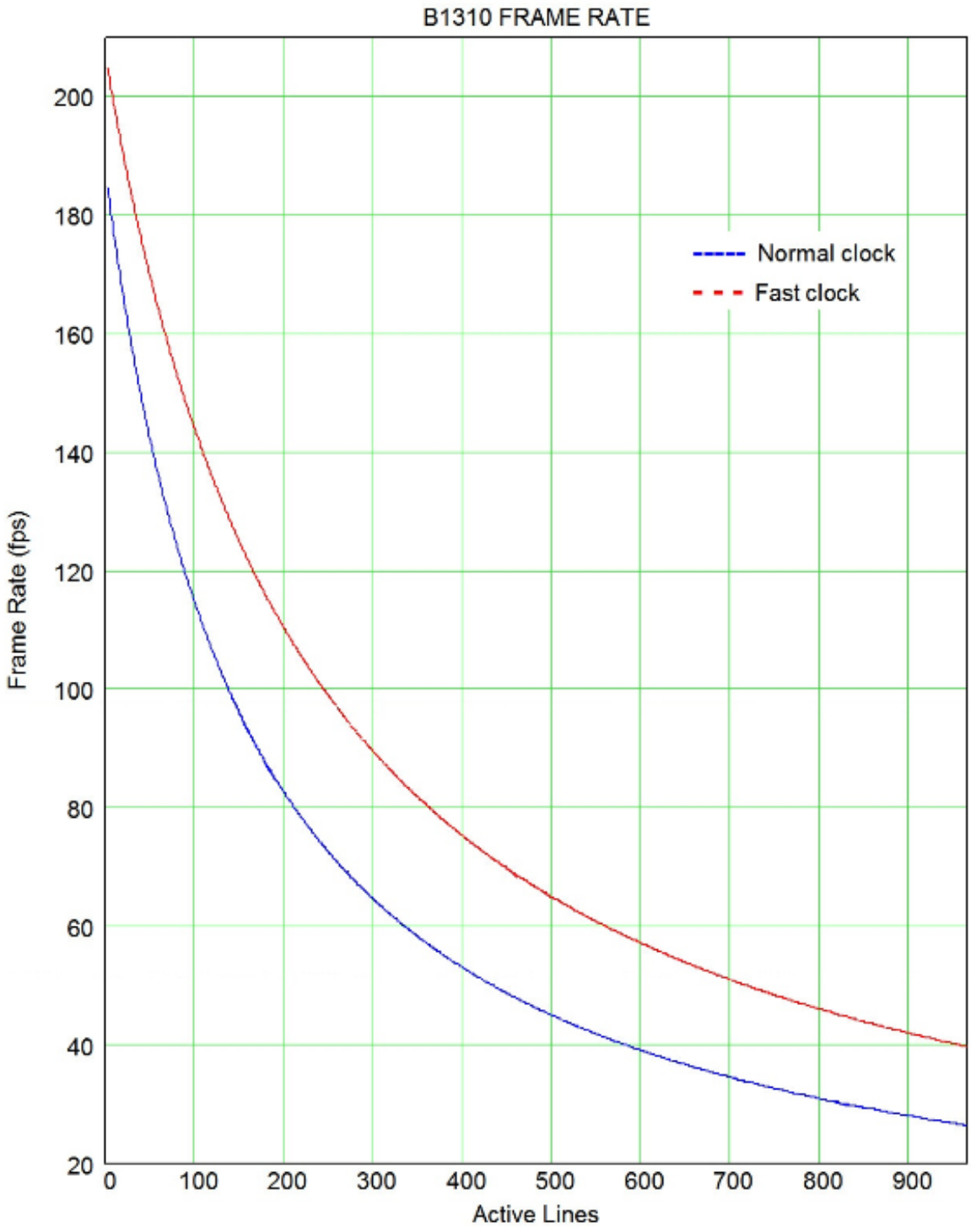

Figure 2.10.1e – Frame rate vs. Vertical window size for B1310

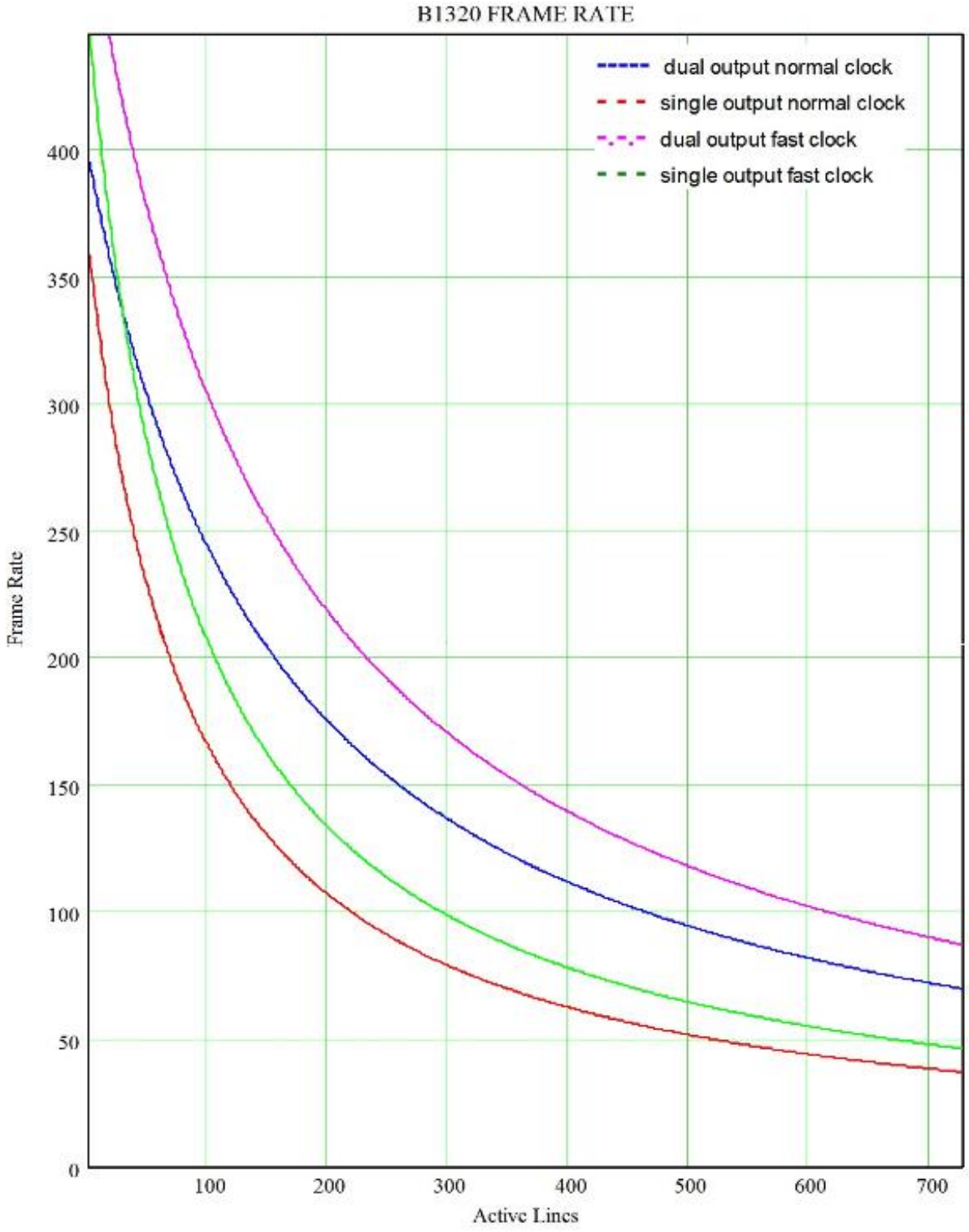

Figure 2.10.1f – Frame rate vs. Vertical window size for B1320

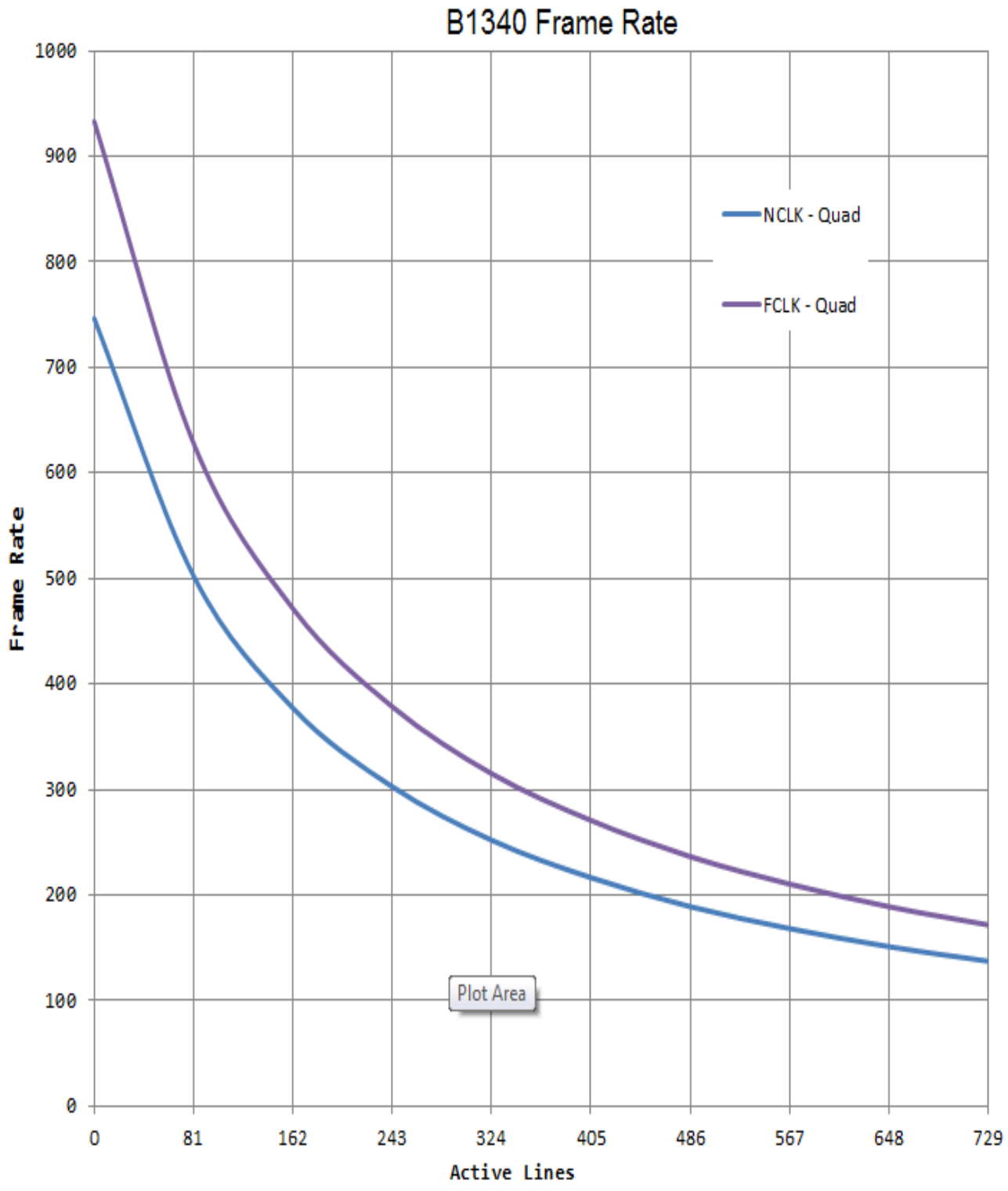

Figure 2.10.1g – Frame rate vs. Vertical window size for B1340

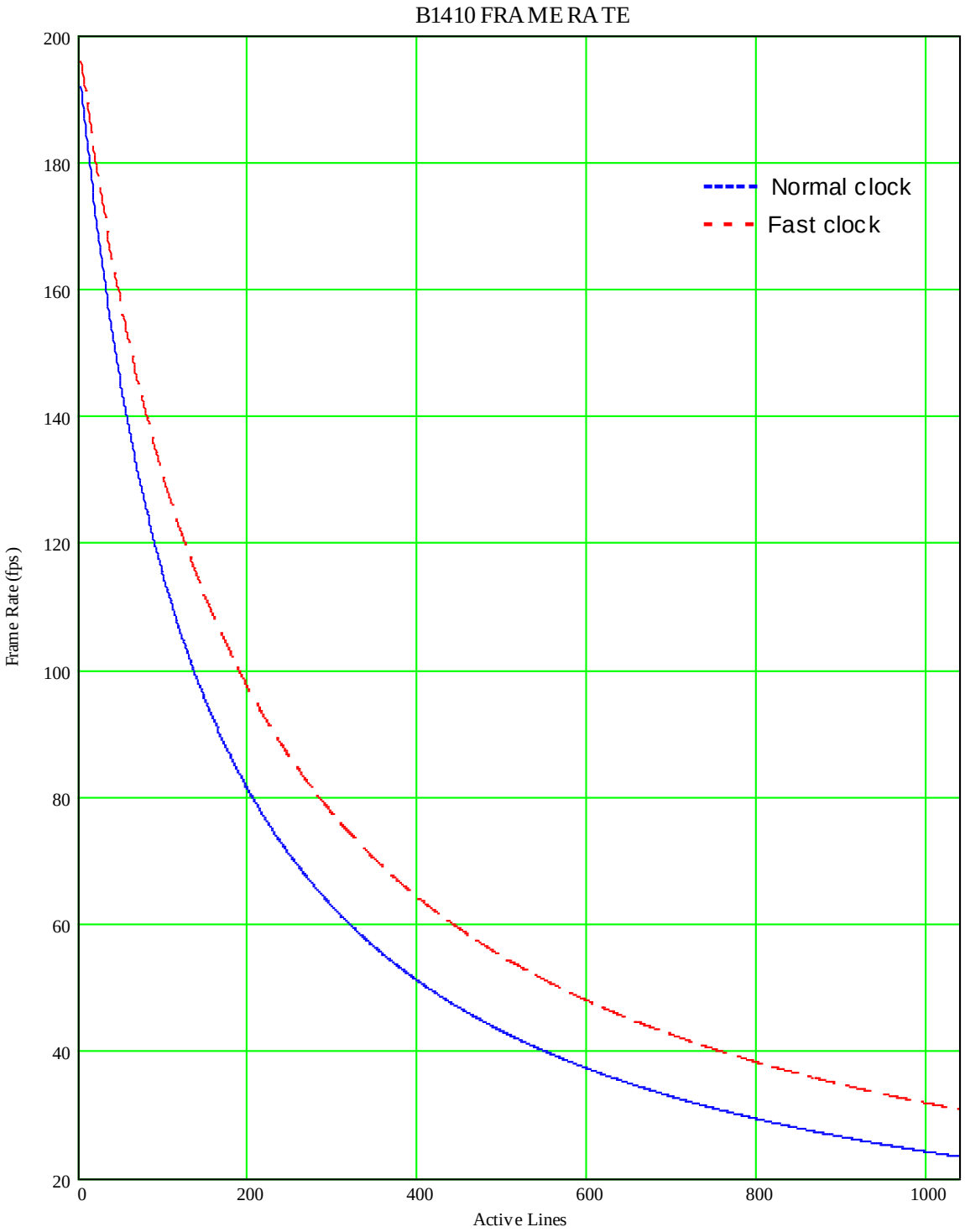

Figure 2.10.1h – Frame rate vs. Vertical window size for B1410

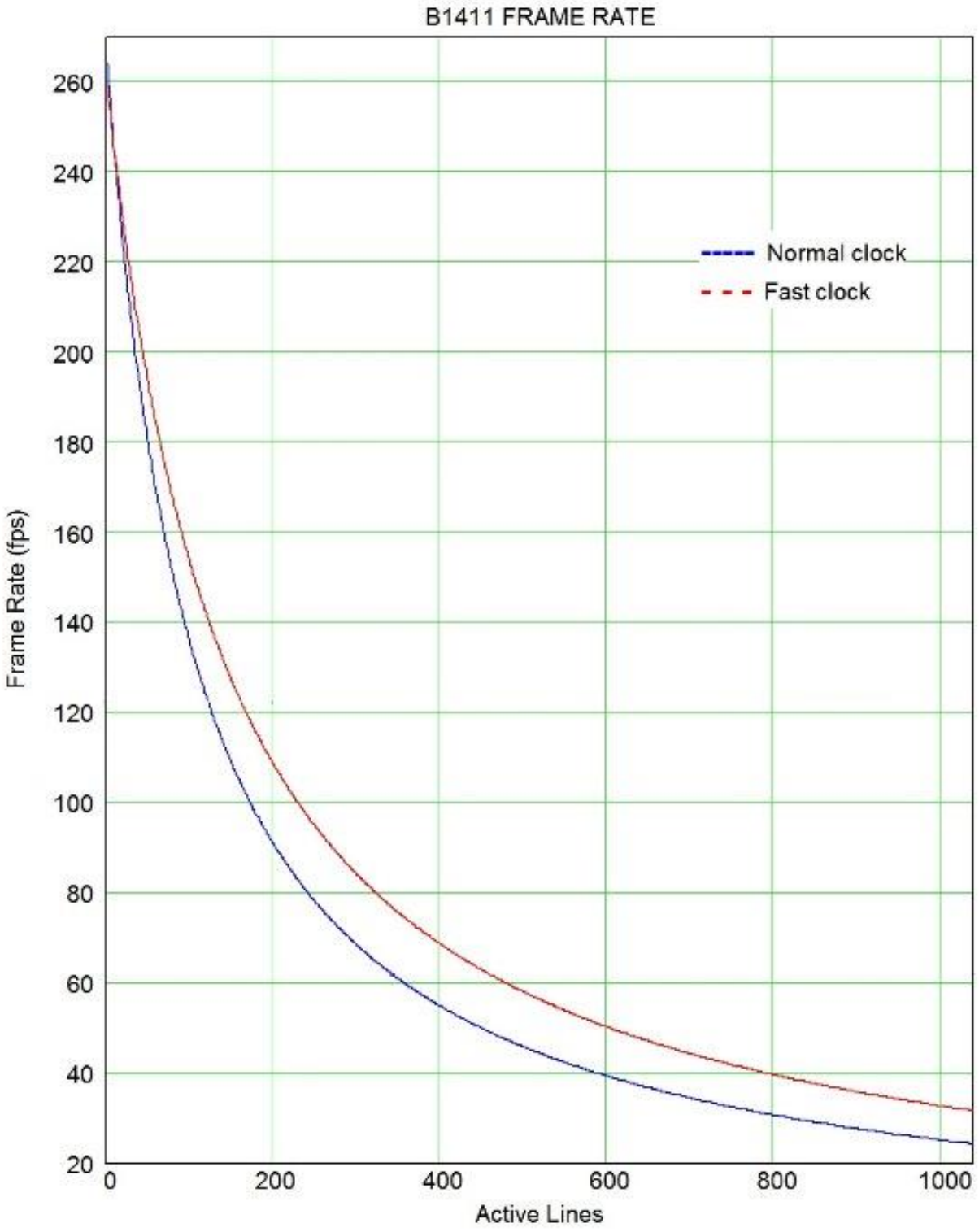

Figure 2.10.1i – Frame rate vs. Vertical window size for B1411

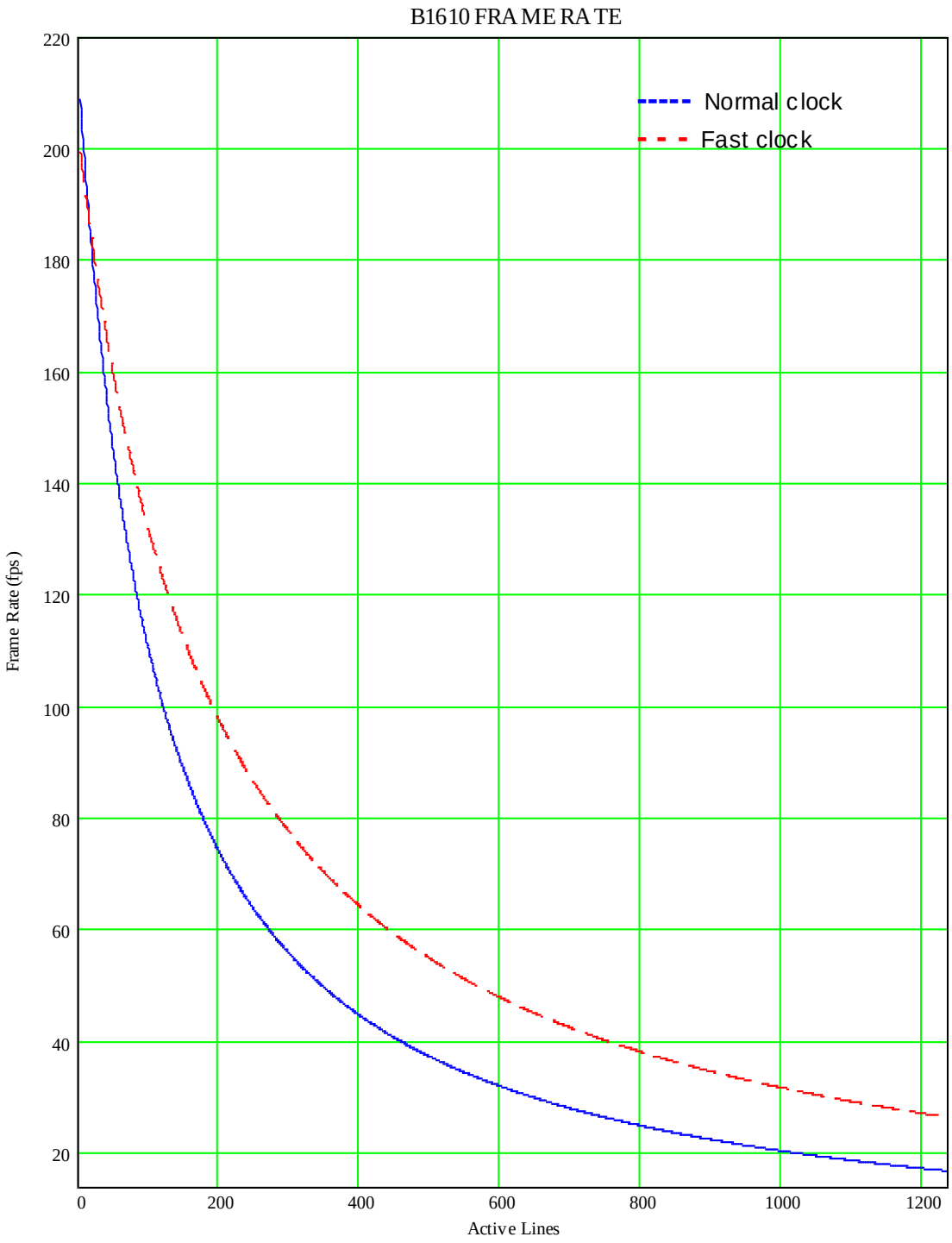

Figure 2.10.1j – Frame rate vs. Vertical window size for B1610

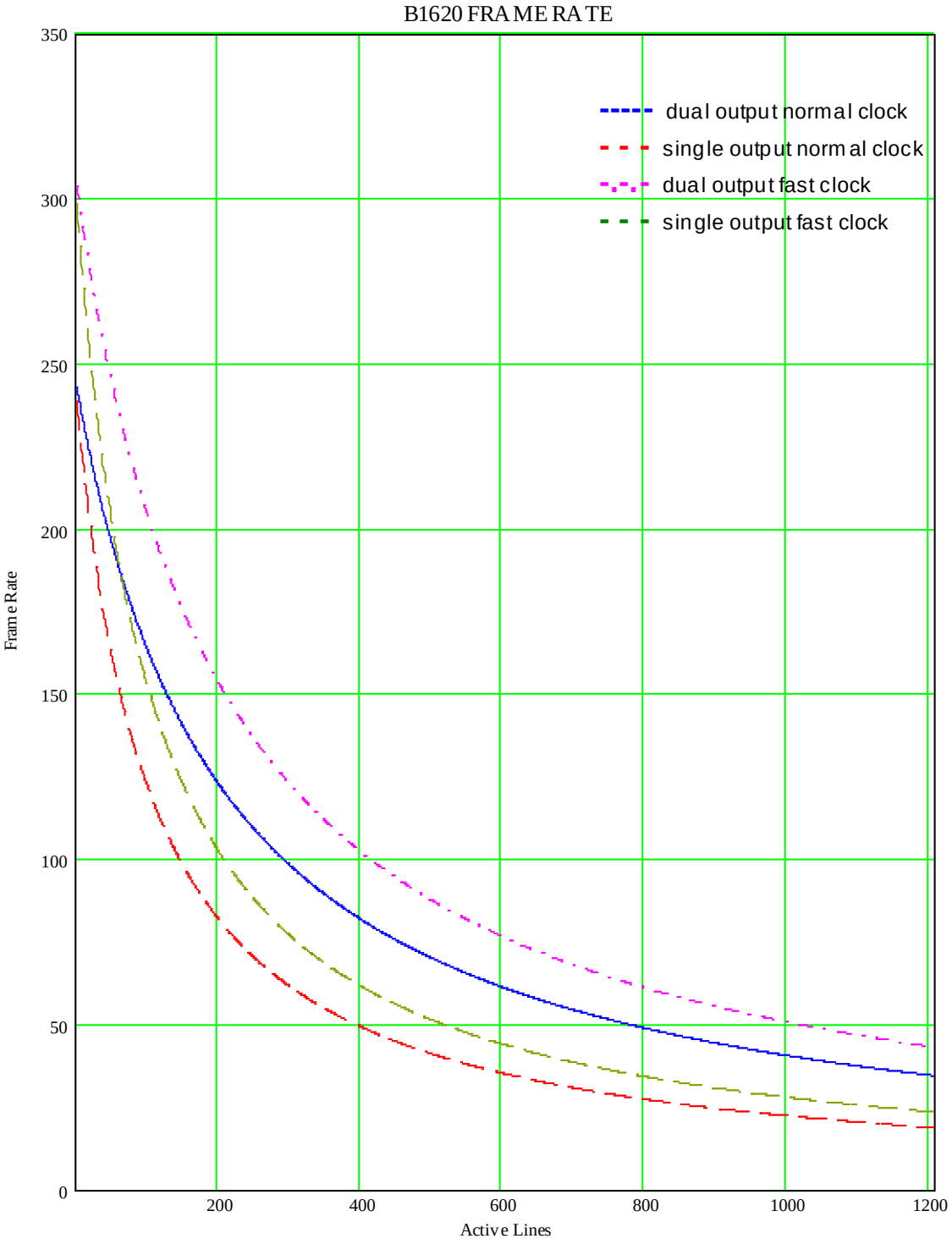

Figure 2.10.1k – Frame rate vs. Vertical window size for B1620

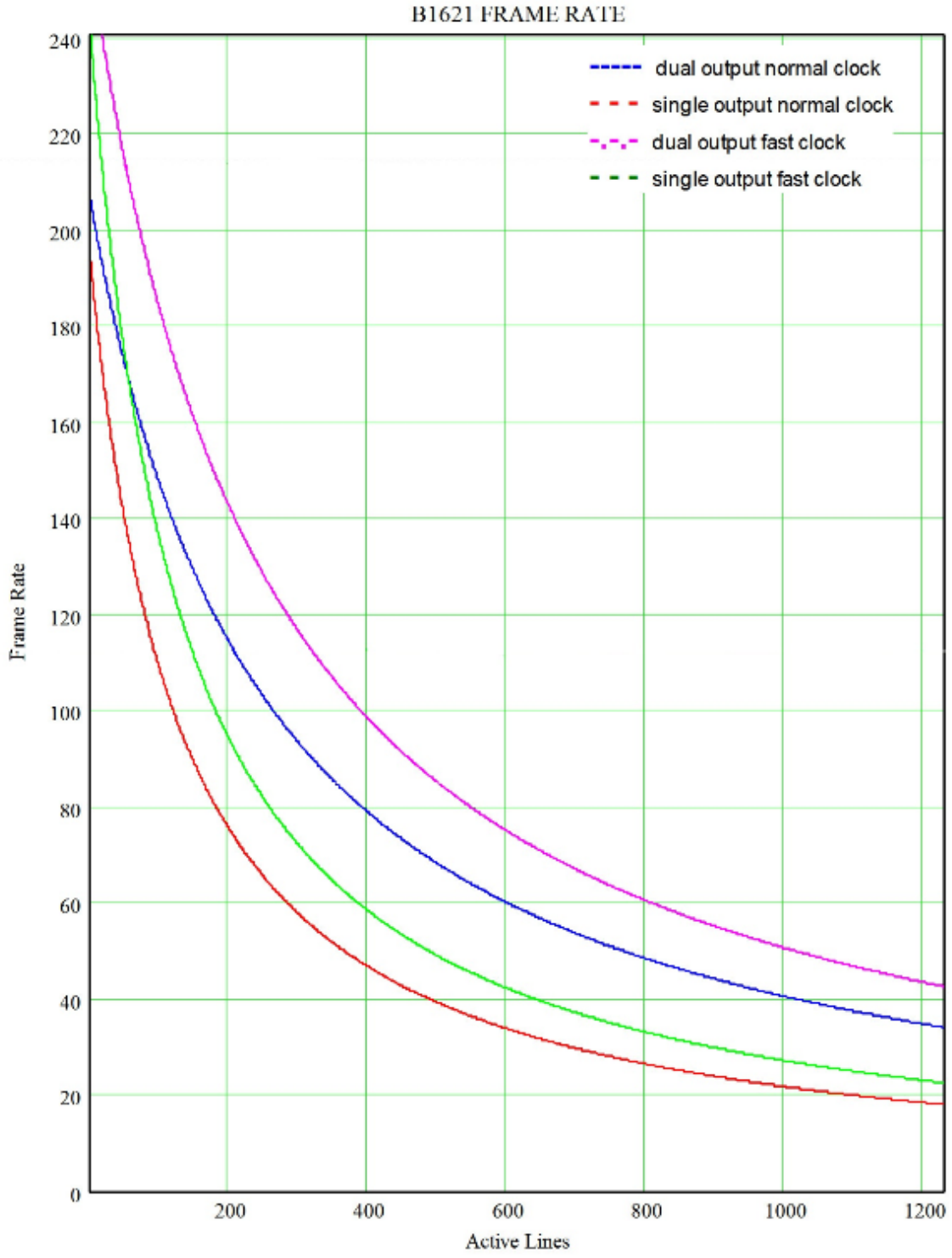

Figure 2.10.1l – Frame rate vs. Vertical window size for B1621

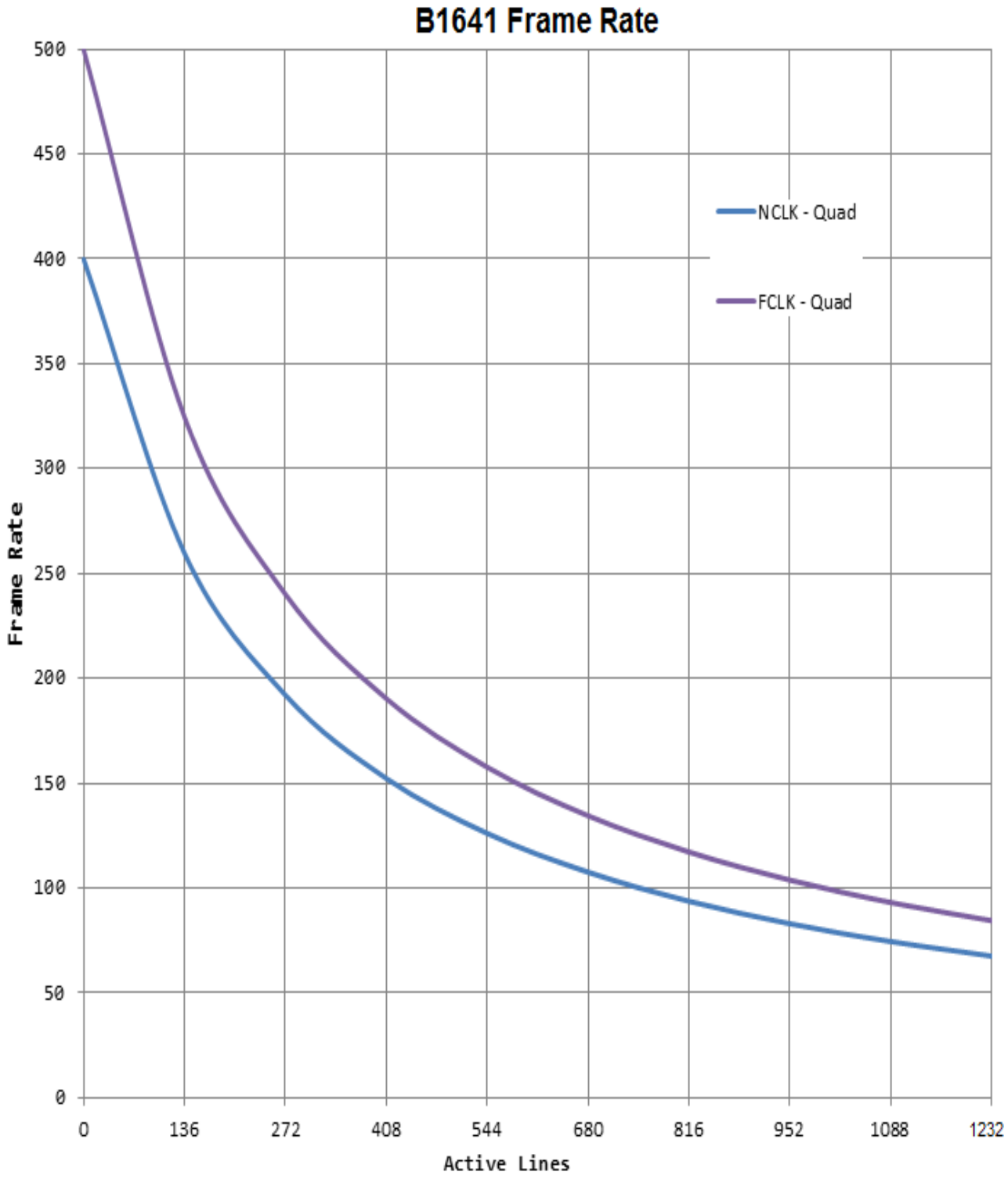

Figure 2.10.1m – Frame rate vs. Vertical window size for B1641

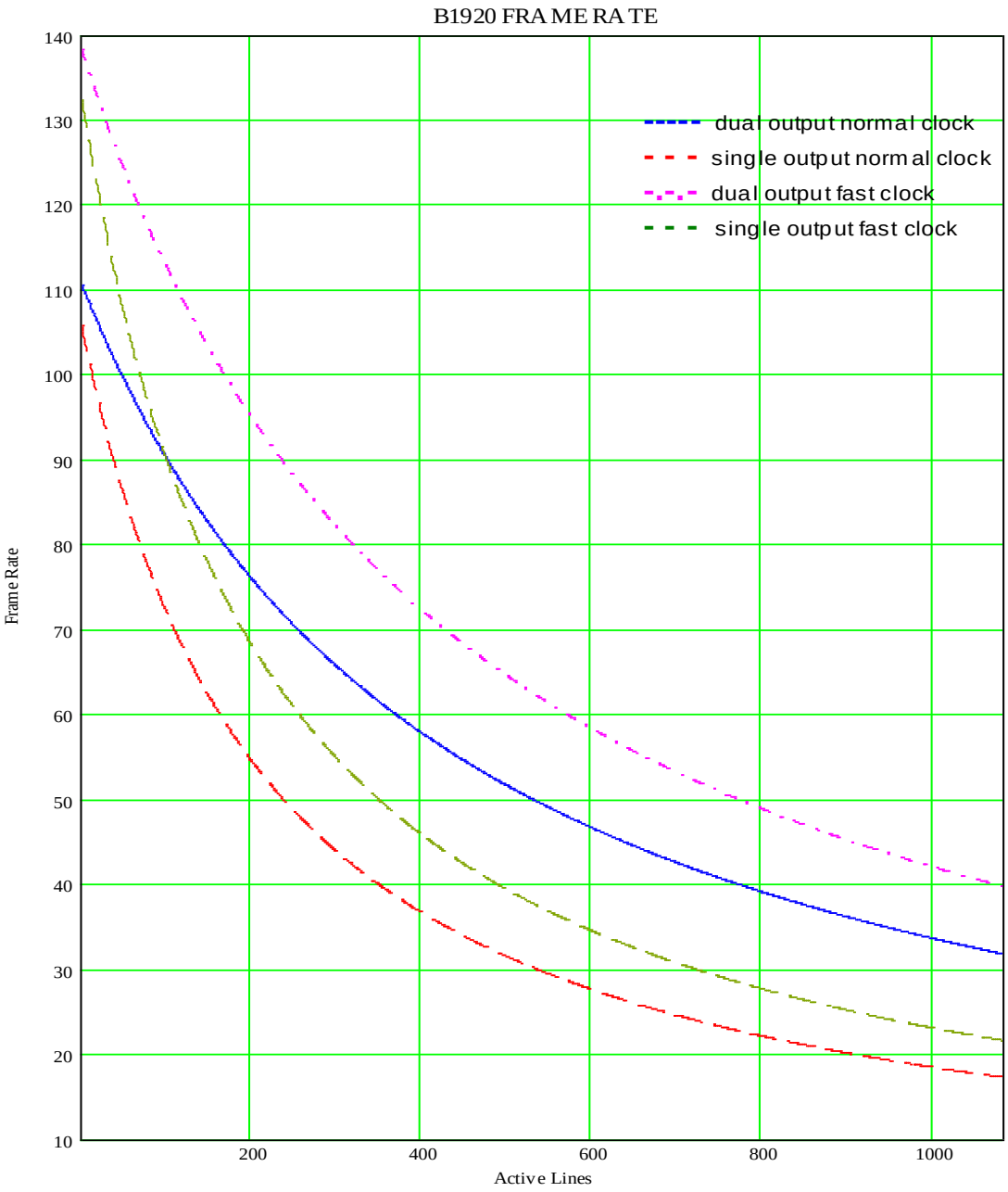

Figure 2.10.1n – Frame rate vs. Vertical window size for B1920

CAUTION NOTE

The CCD used in B1920 (KAI-2093) natively does not support increase frame rate with reduced vertical frame size. Due to this, in some bright light scenes, blooming is possible. If blooming occurs, please reduce the light by closing the lens or introduce an ND filter.

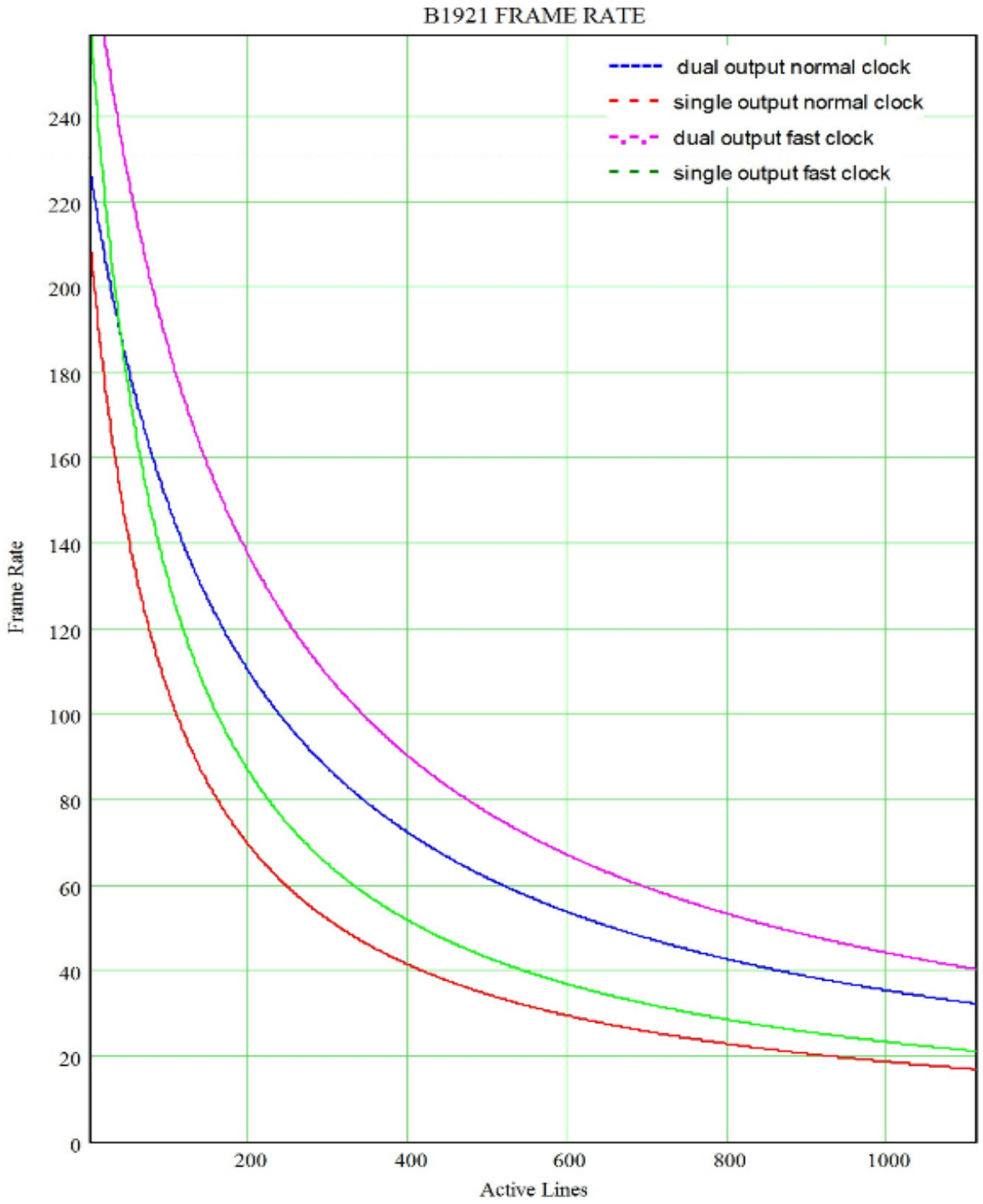

Figure 2.10.1o – Frame rate vs. Vertical window size for B1921

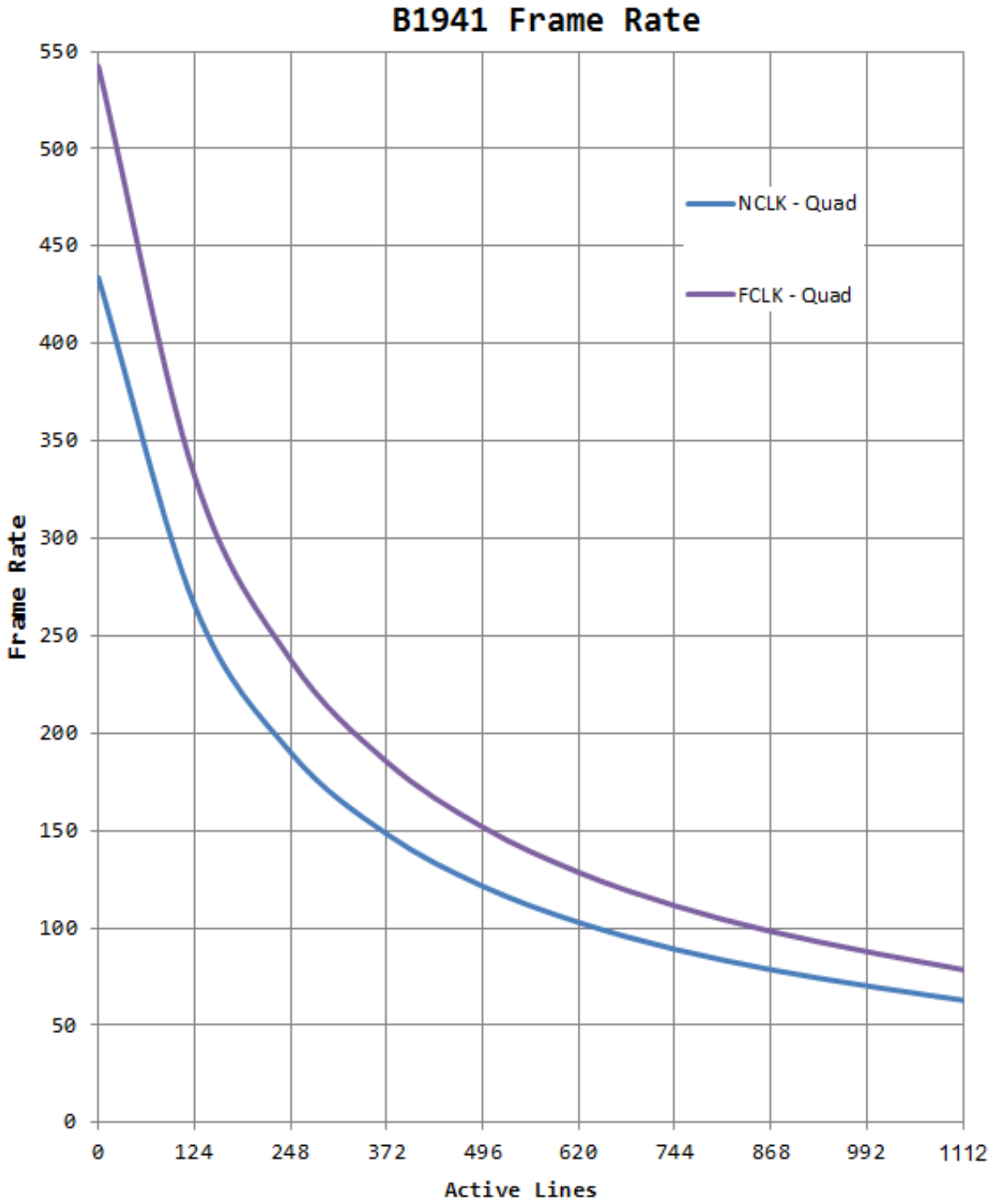

Figure 2.10.1p – Frame rate vs. Vertical window size for B1941

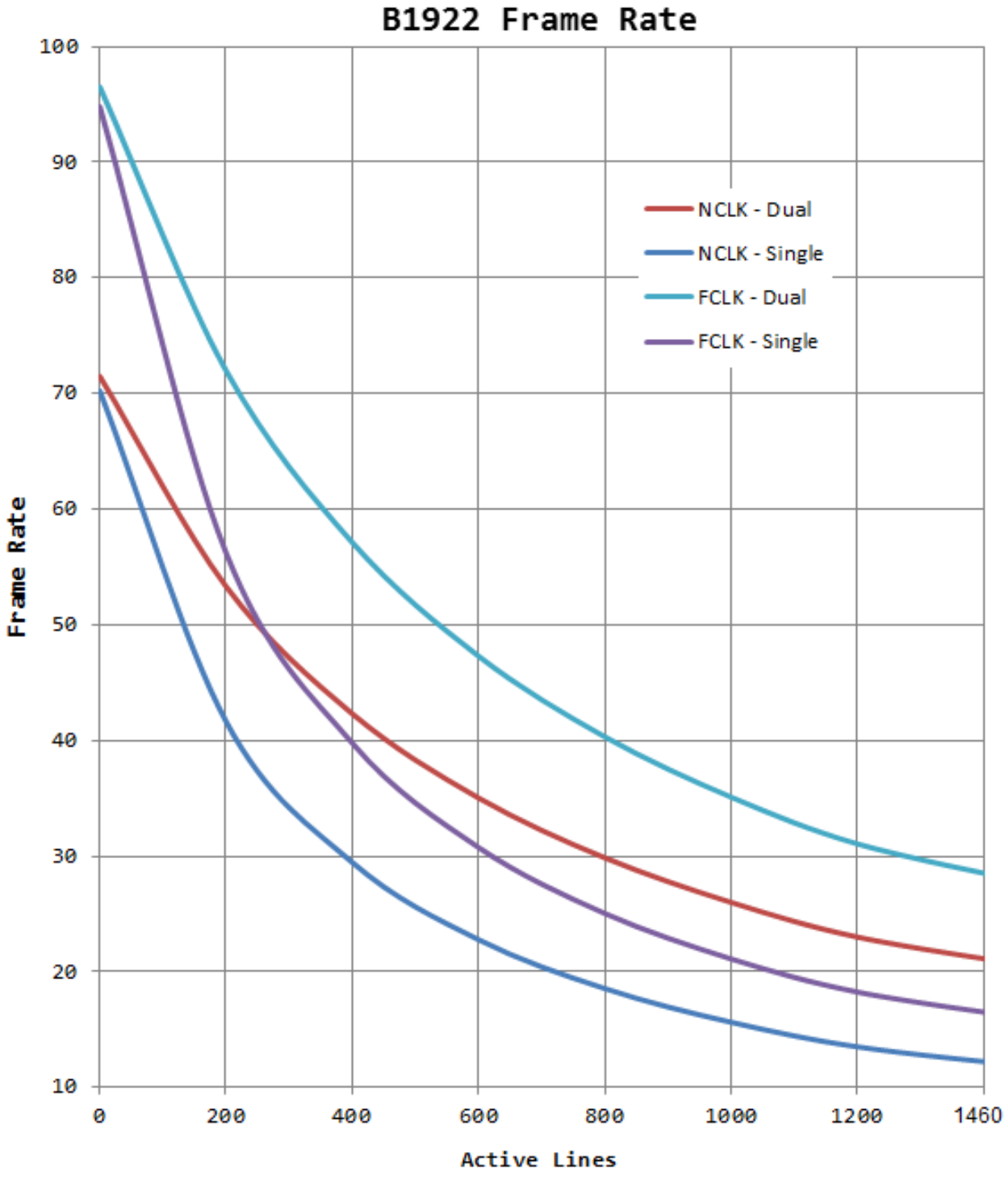

Figure 2.10.1q – Frame rate vs. Vertical window size for B1922

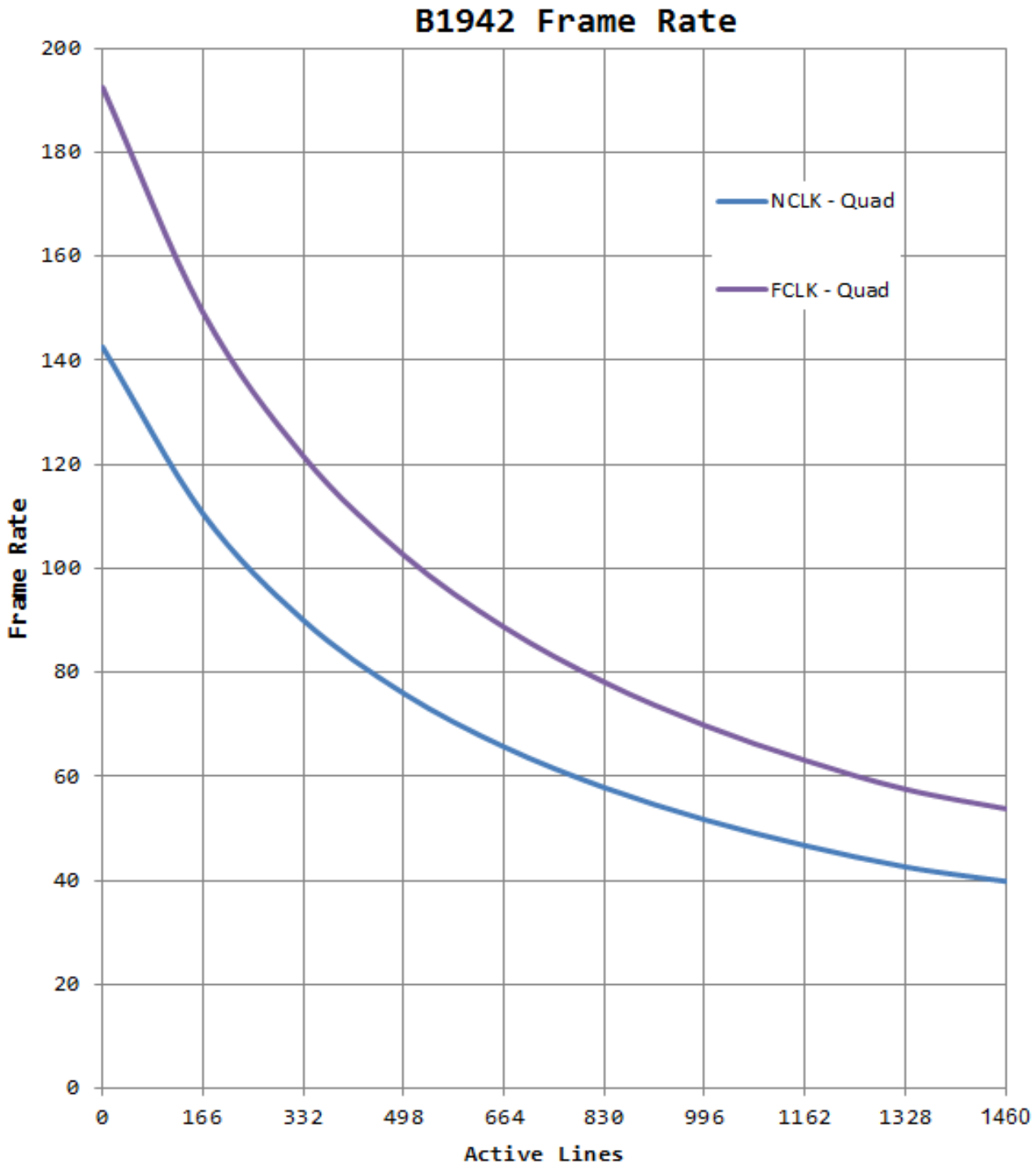

Figure 2.10.1r – Frame rate vs. Vertical window size for B1922

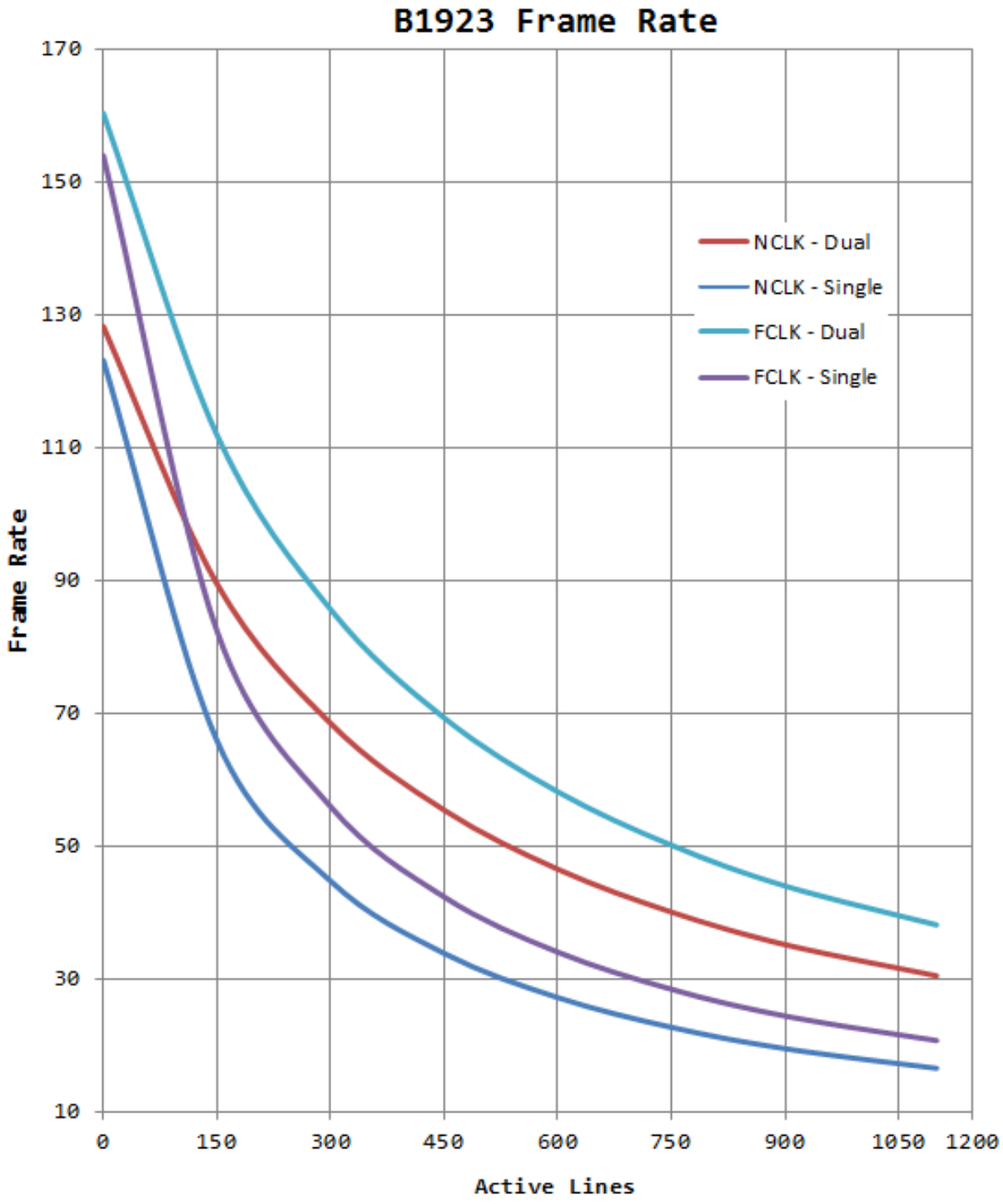

Figure 2.10.1s – Frame rate vs. Vertical window size for B1923

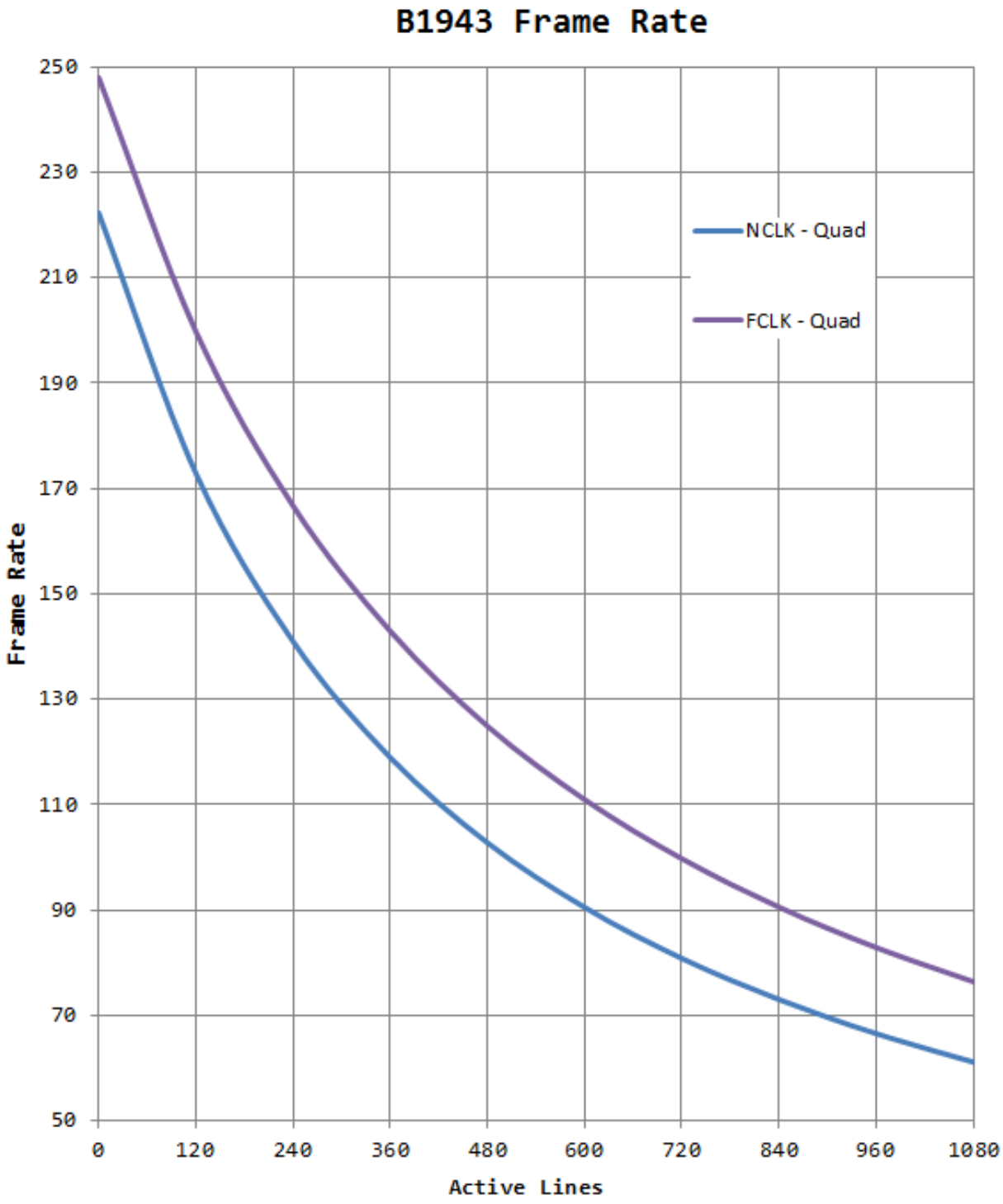

Figure 2.10.1t – Frame rate vs. vertical window size for B1943

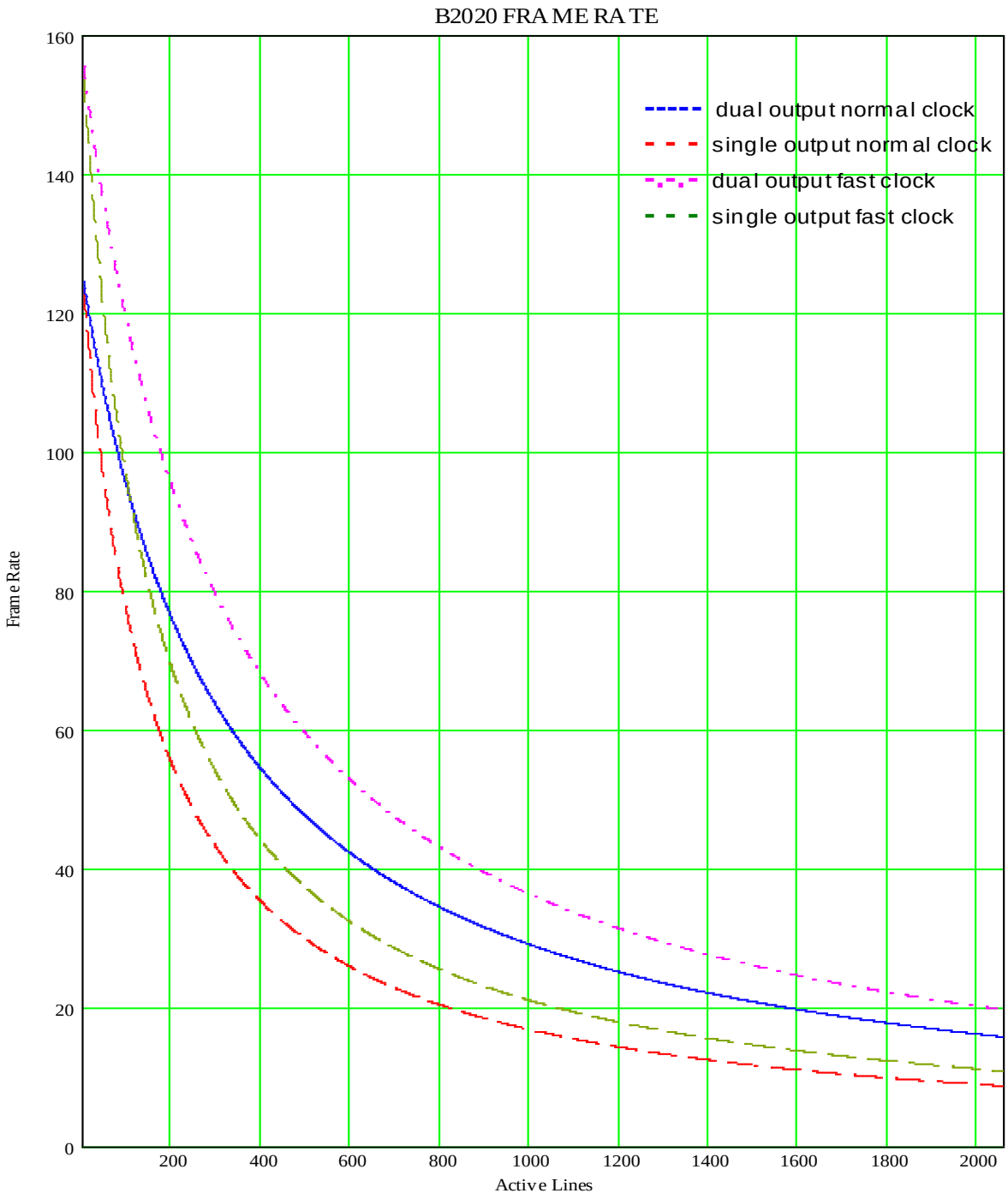

Figure 2.10.1u – Frame rate vs. vertical window size for B2020

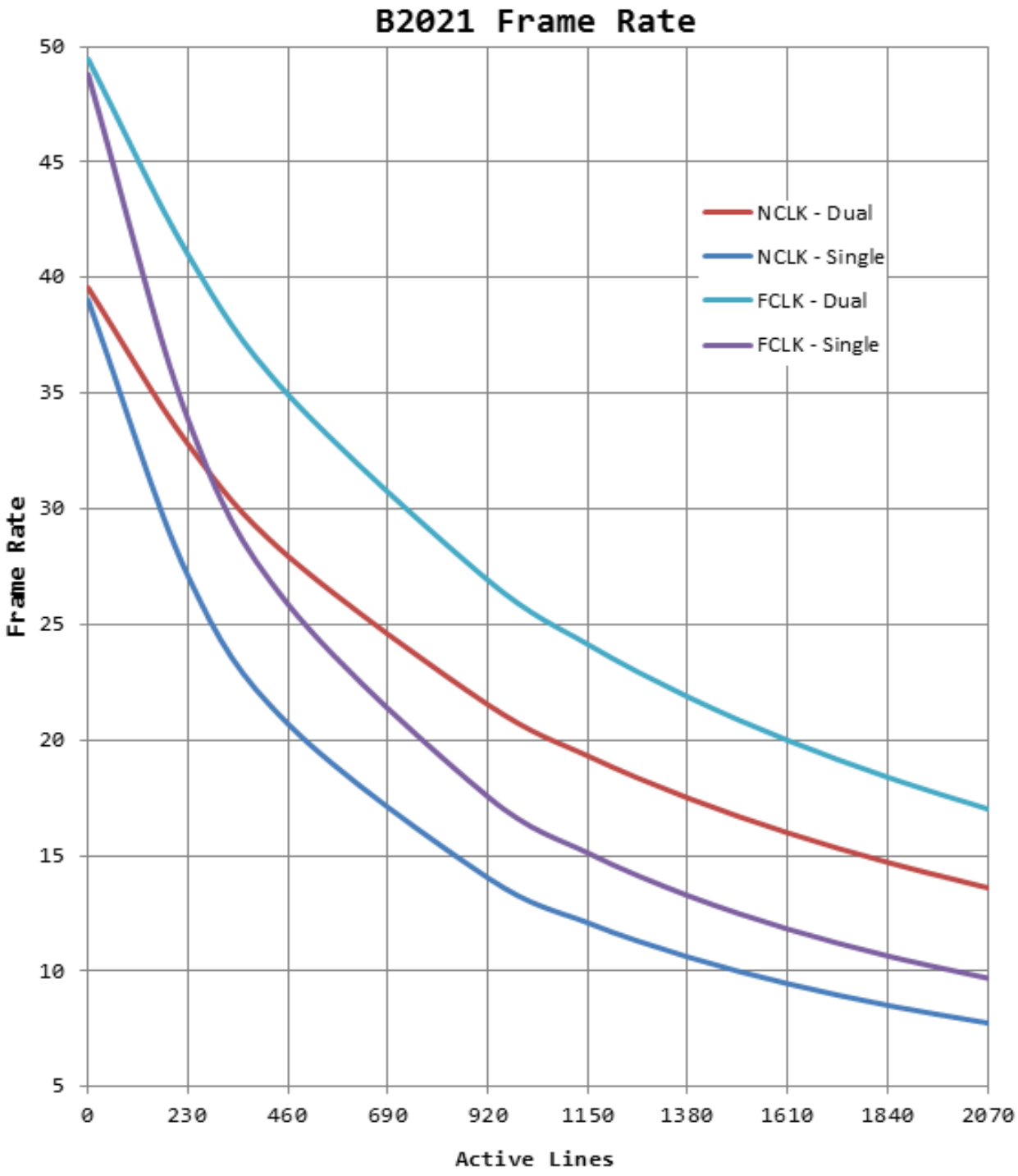

Figure 2.10.1v – Frame rate vs. vertical window size for B2021

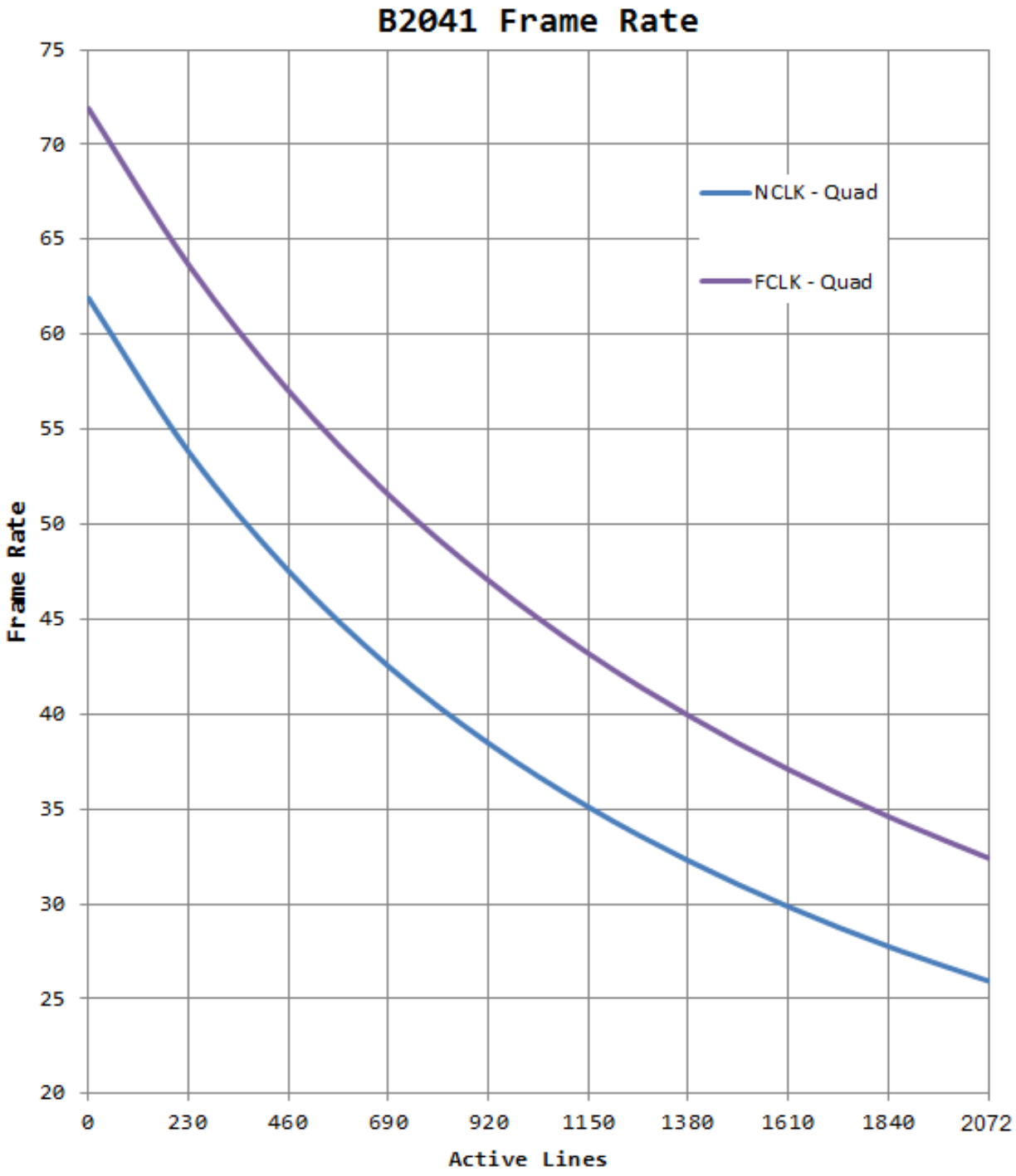

Figure 2.10.1w – Frame rate vs. vertical window size for B2021

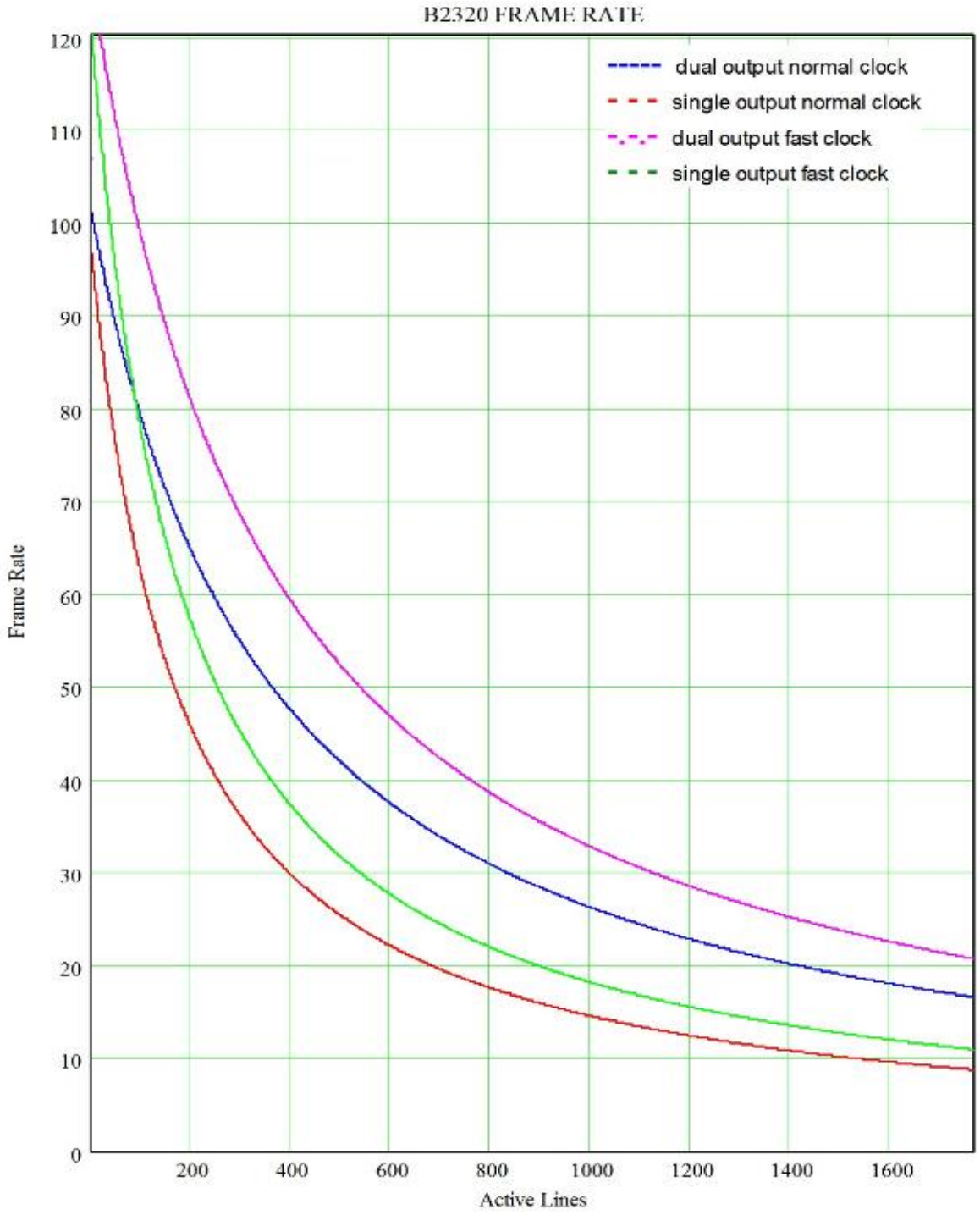

Figure 2.10.1x– Frame rate vs. vertical window size for B2320

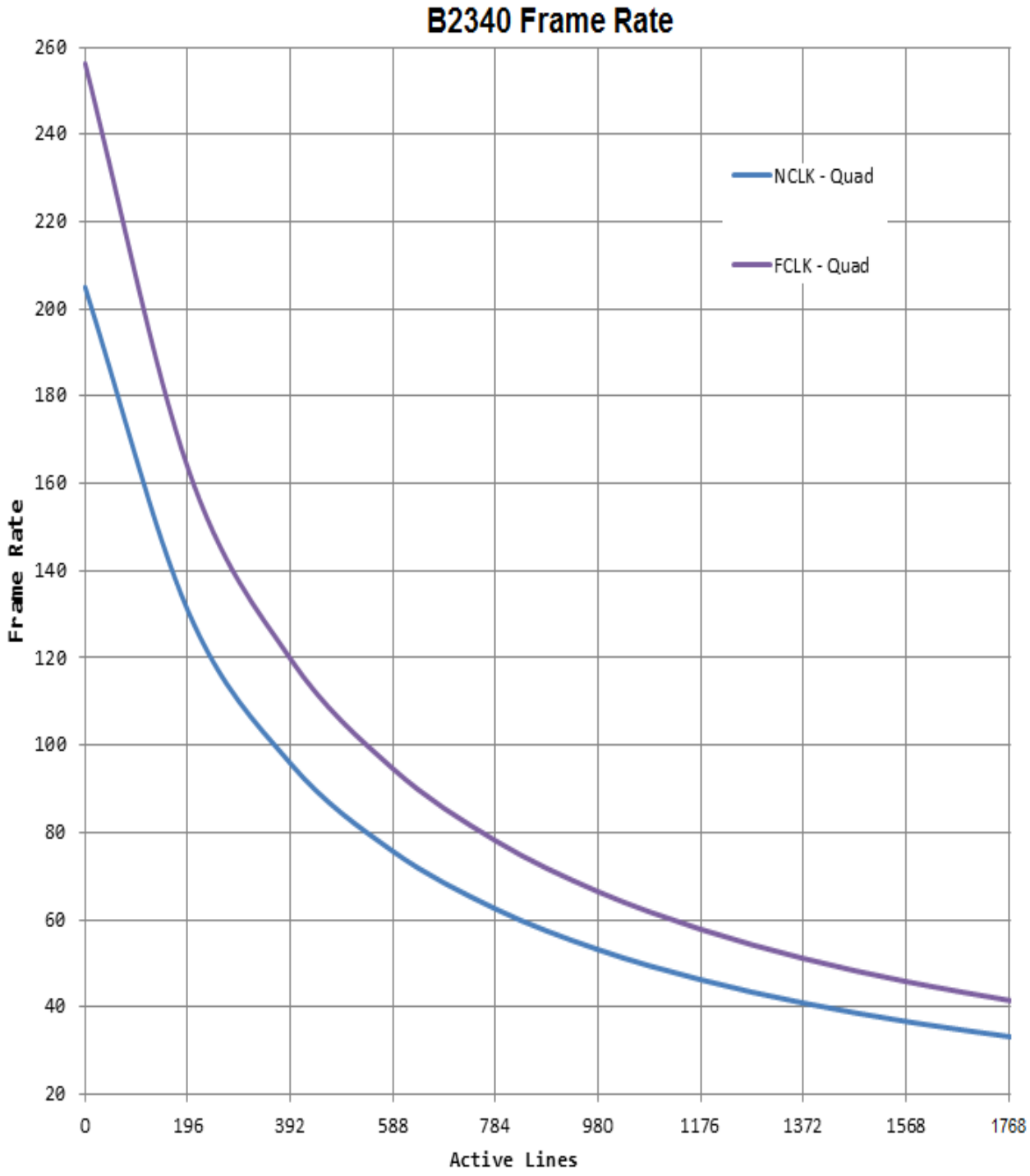

Figure 2.10.1y – Frame rate vs. vertical window size for B2340

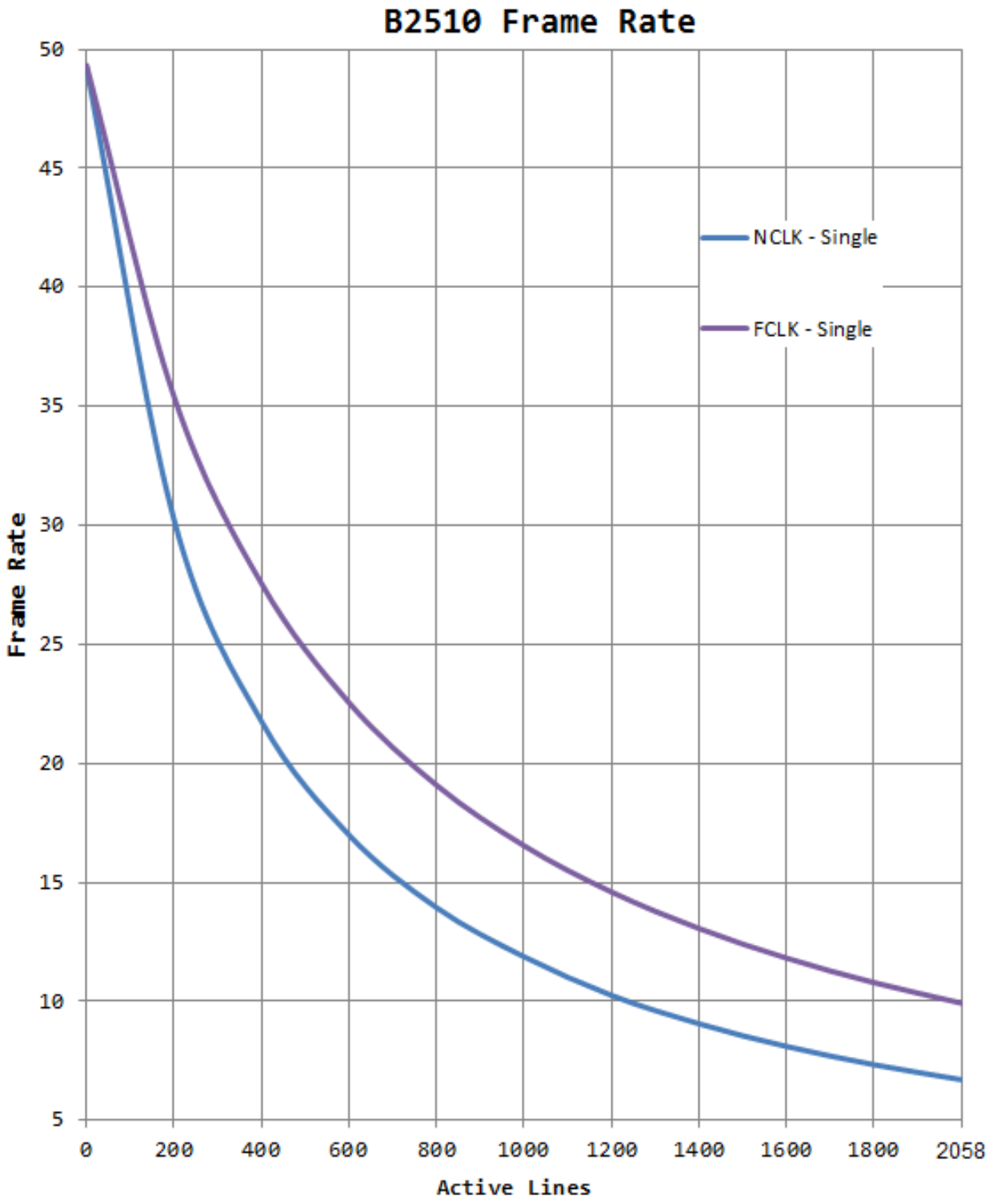

Figure 2.10.1za – Frame rate vs. vertical window size for B2510

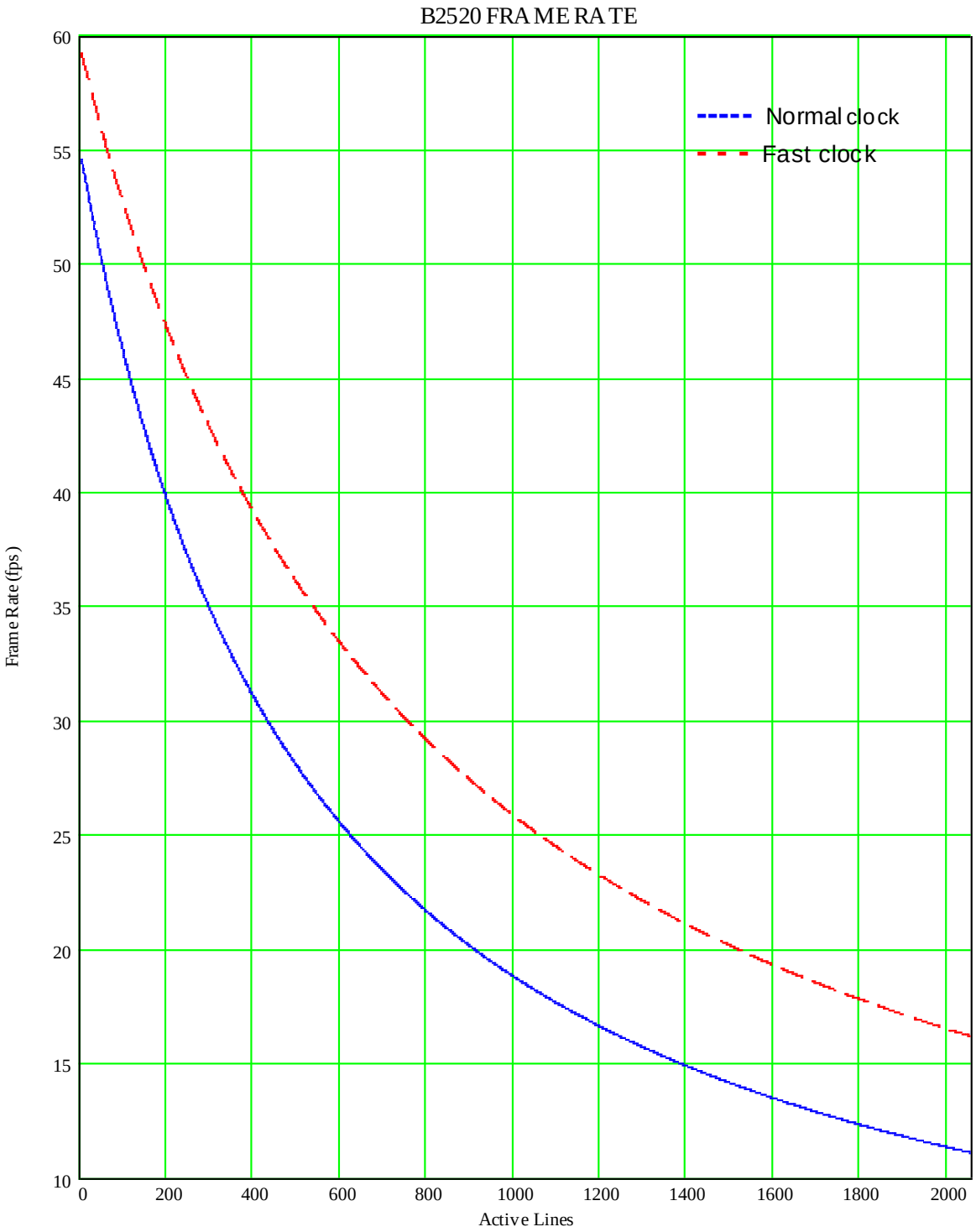

Figure 2.10.1zb – Frame rate vs. vertical window size for B2520

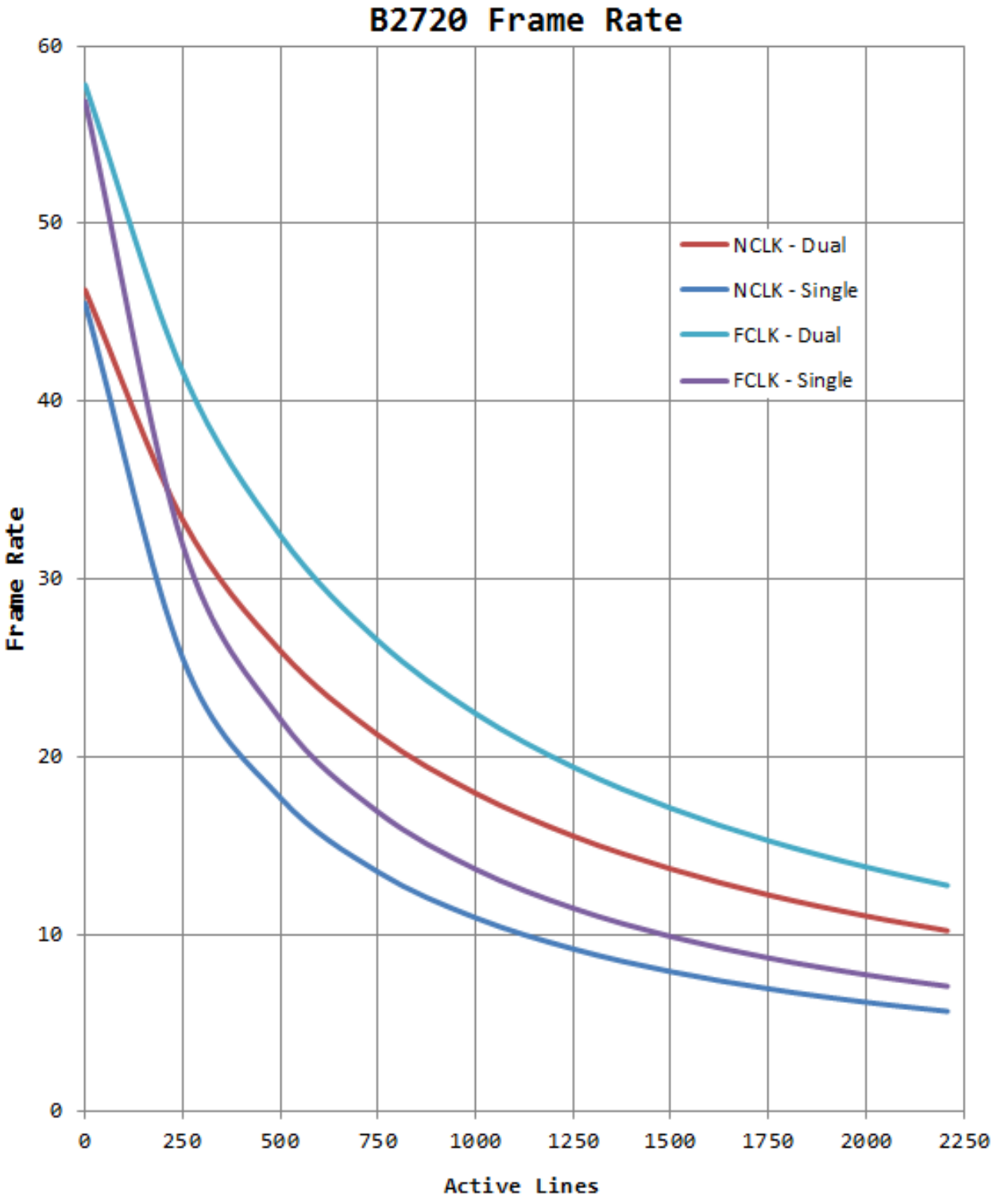

Figure 2.10.1zc – Frame rate vs. vertical window size for B2720

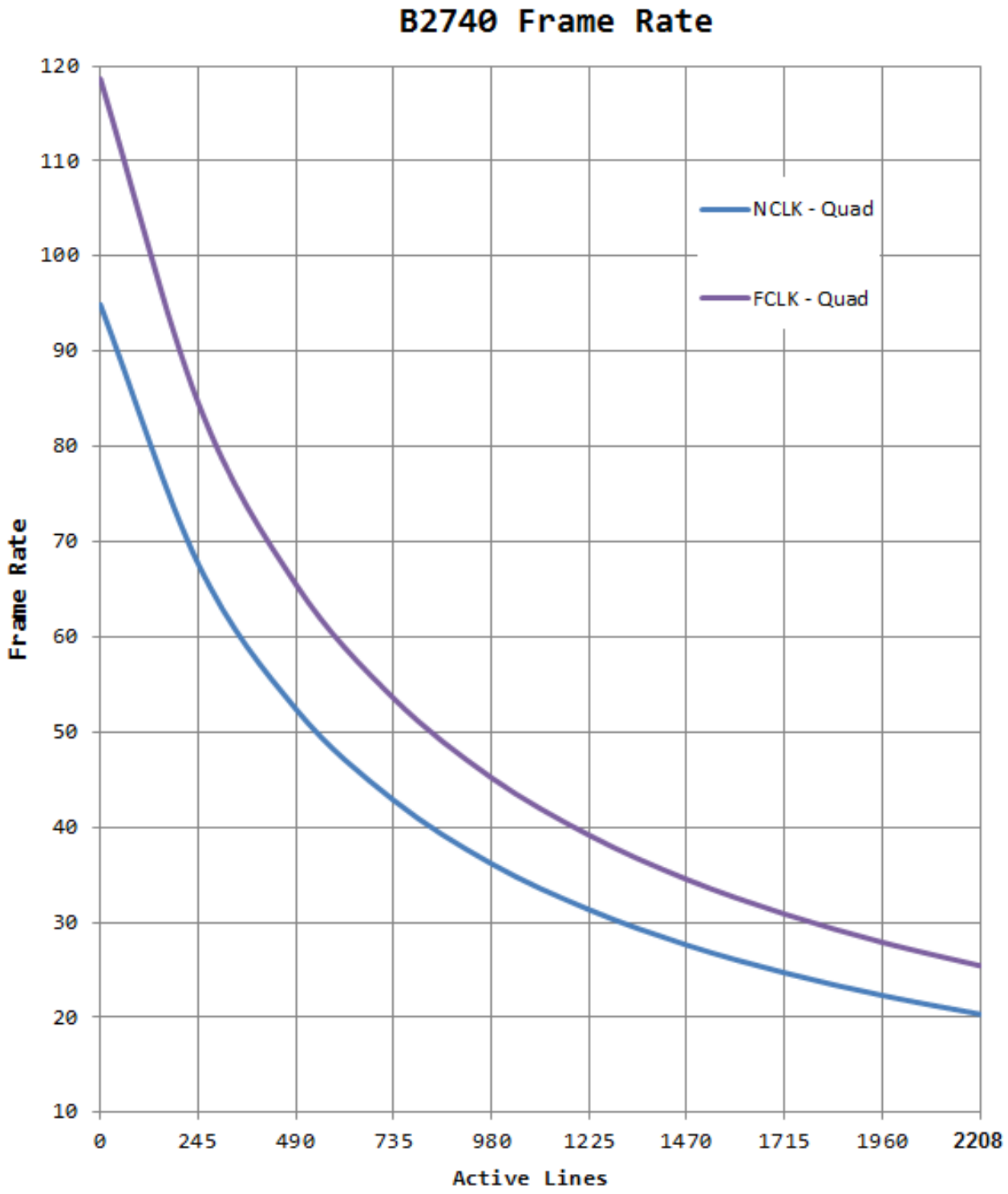

Figure 2.10.1zd – Frame rate vs. vertical window size for B2740

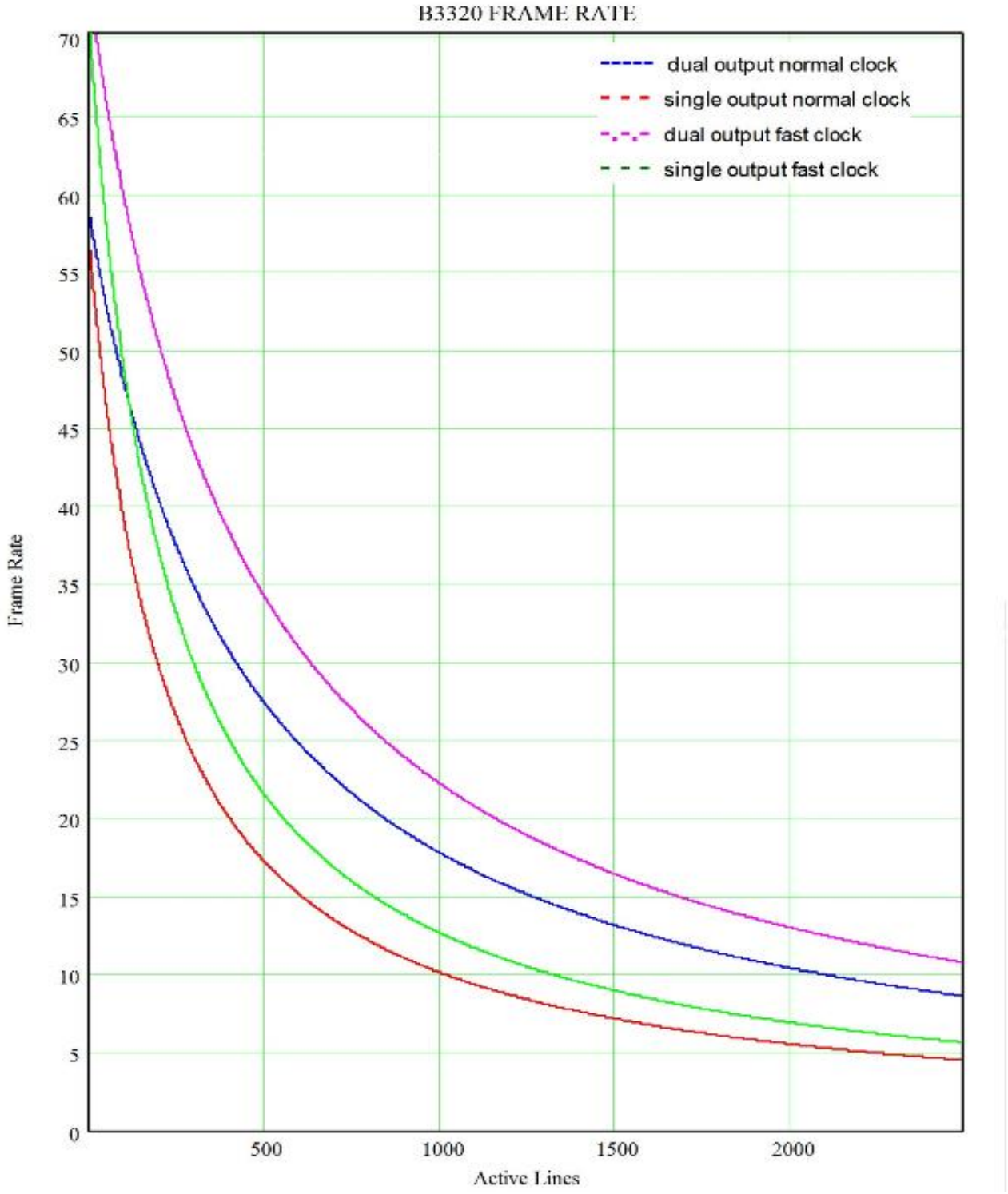

Figure 2.10.1ze – Frame rate vs. vertical window size for B3320

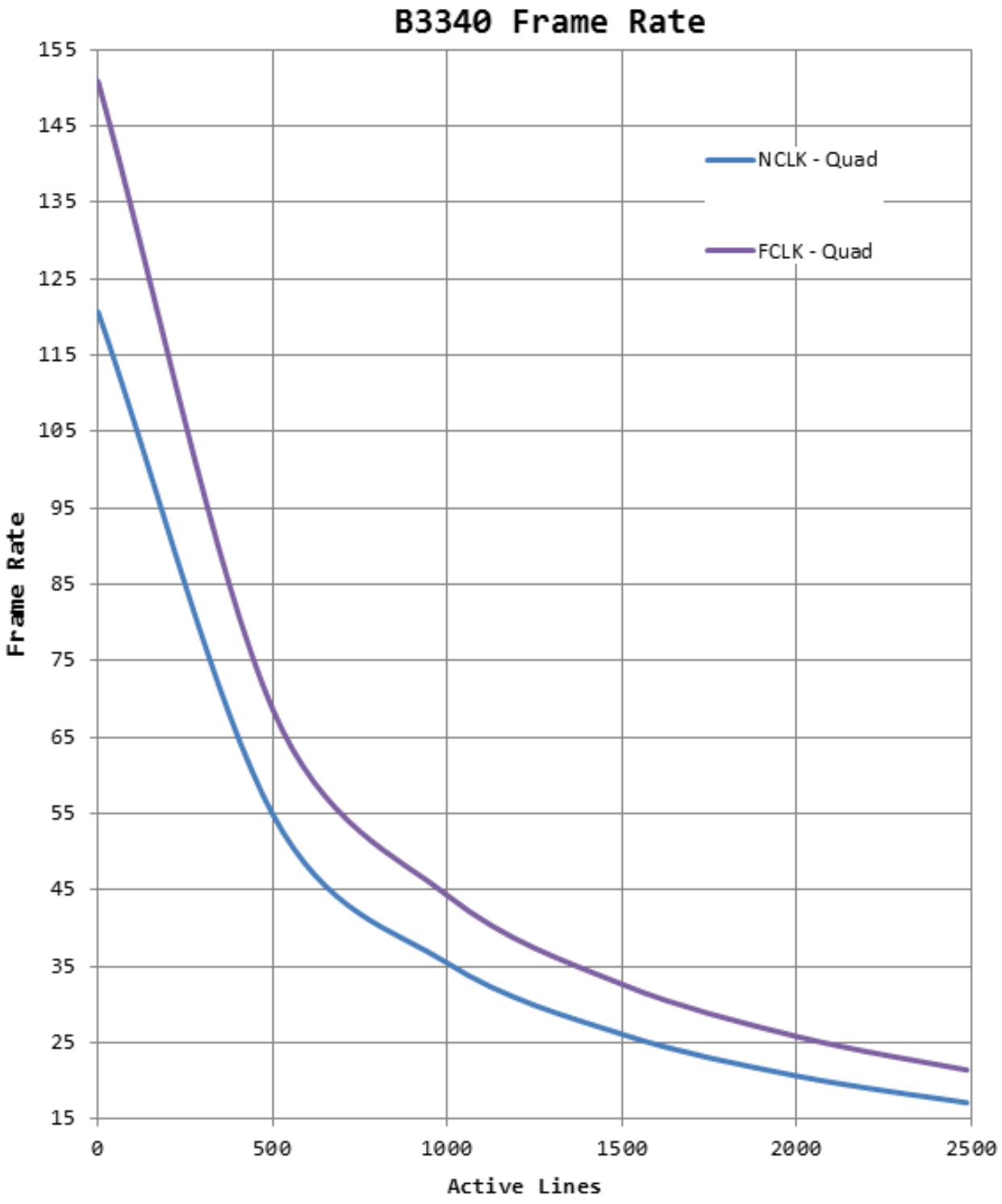

Figure 2.10.1zf – Frame rate vs. vertical window size for B3340

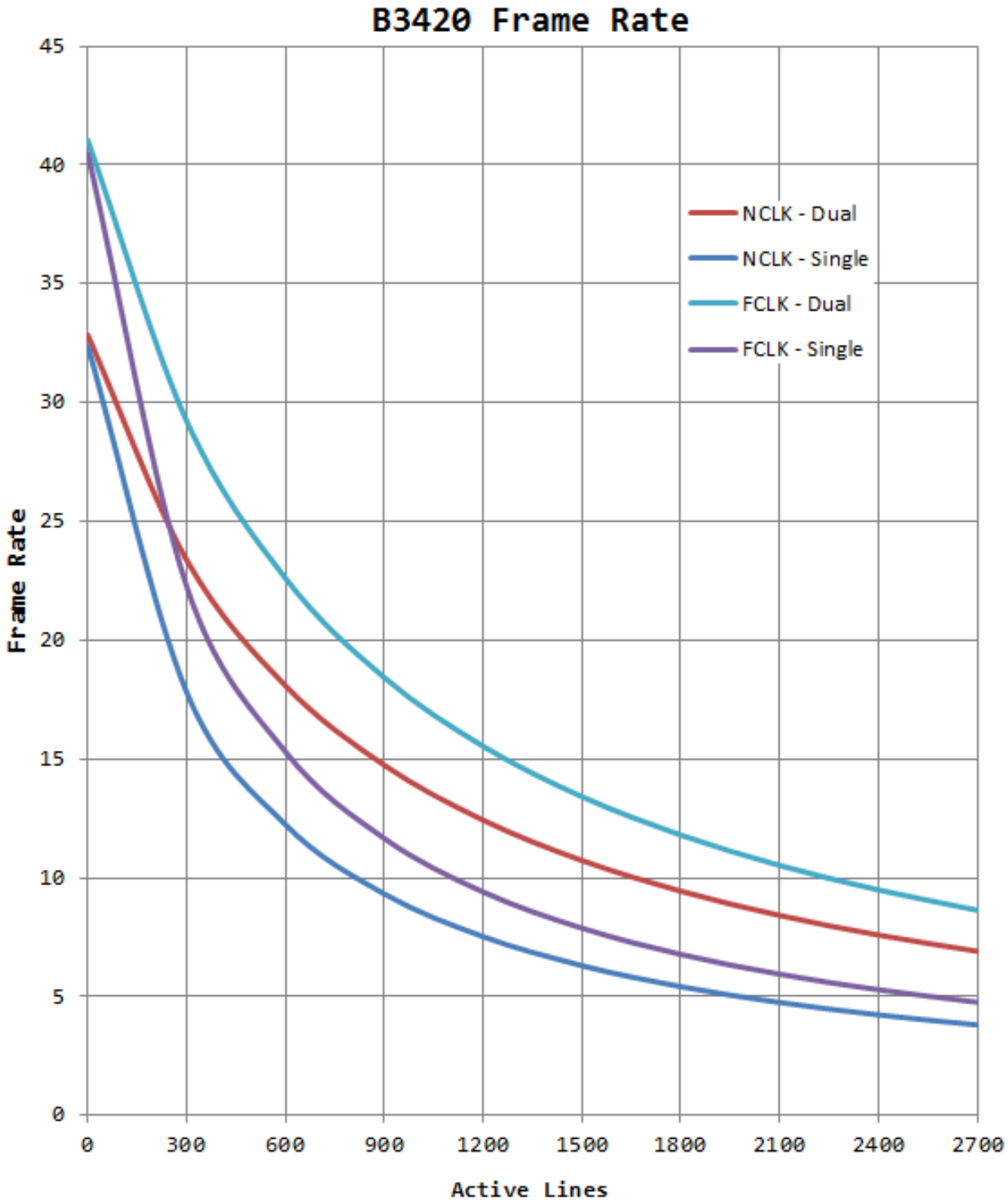

Figure 2.10.1zg – Frame rate vs. vertical window size for B3420

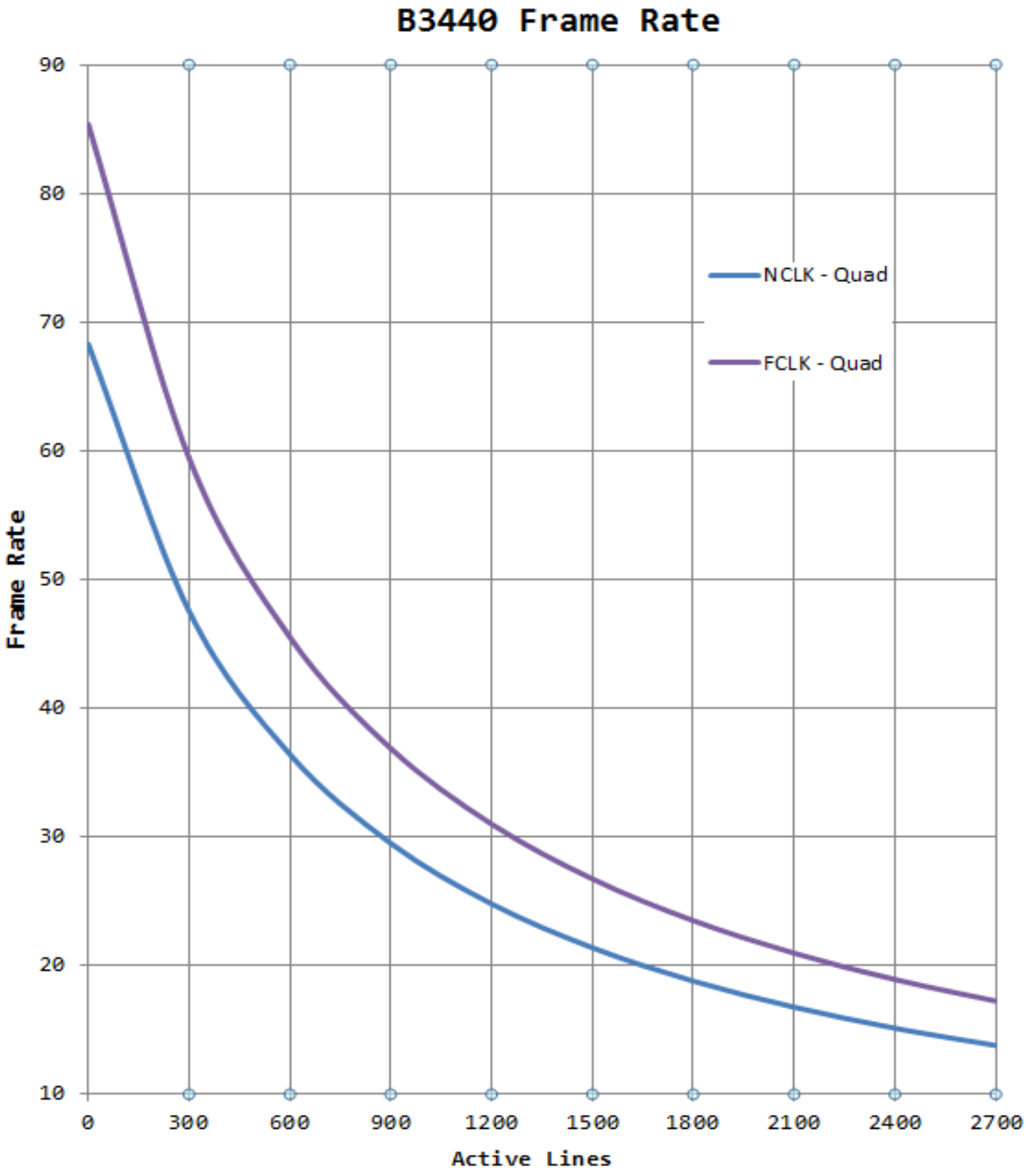

Figure 2.10.1zh– Frame rate vs. vertical window size for B3440

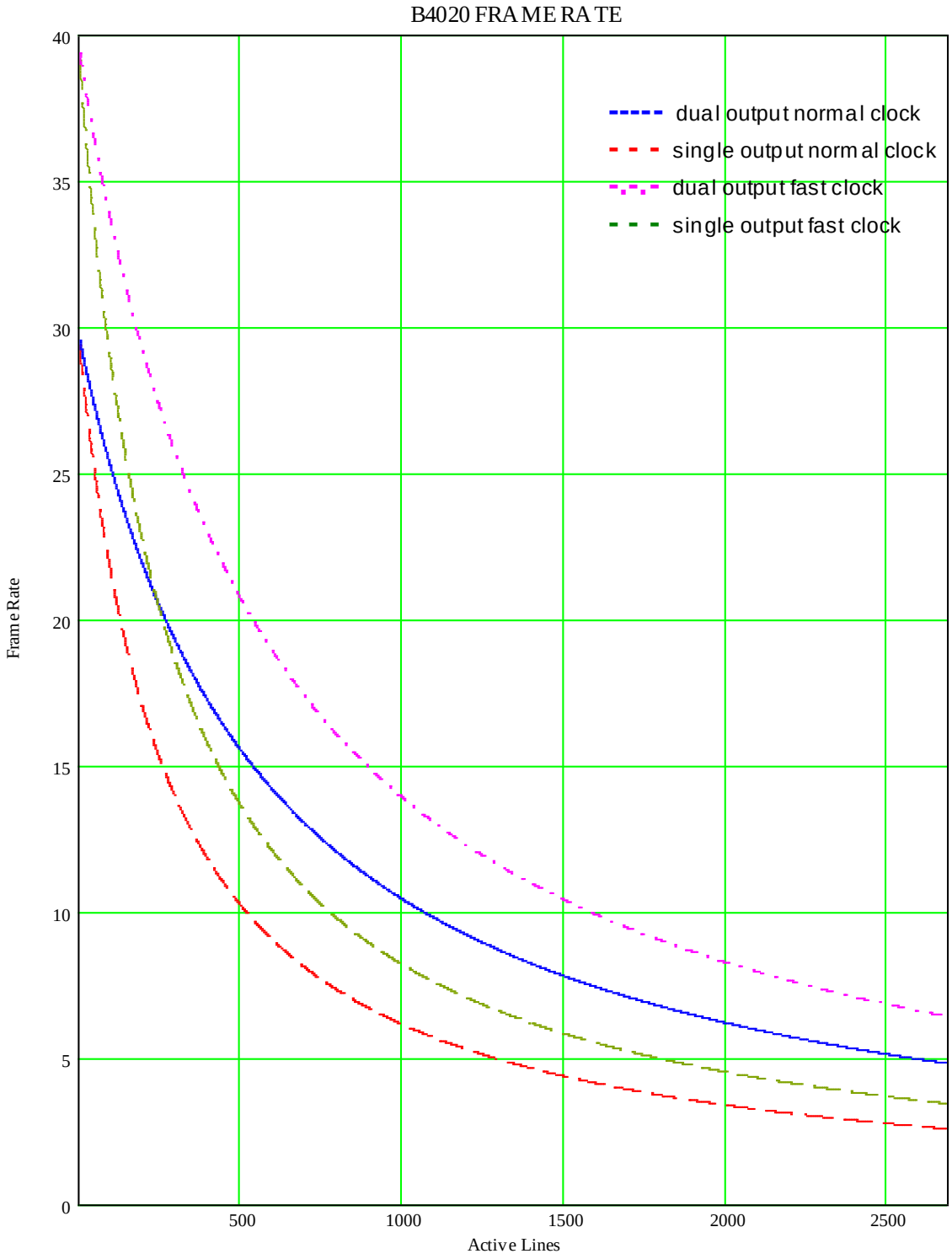

Figure 2.10.1zi – Frame rate vs. vertical window size for B4020.

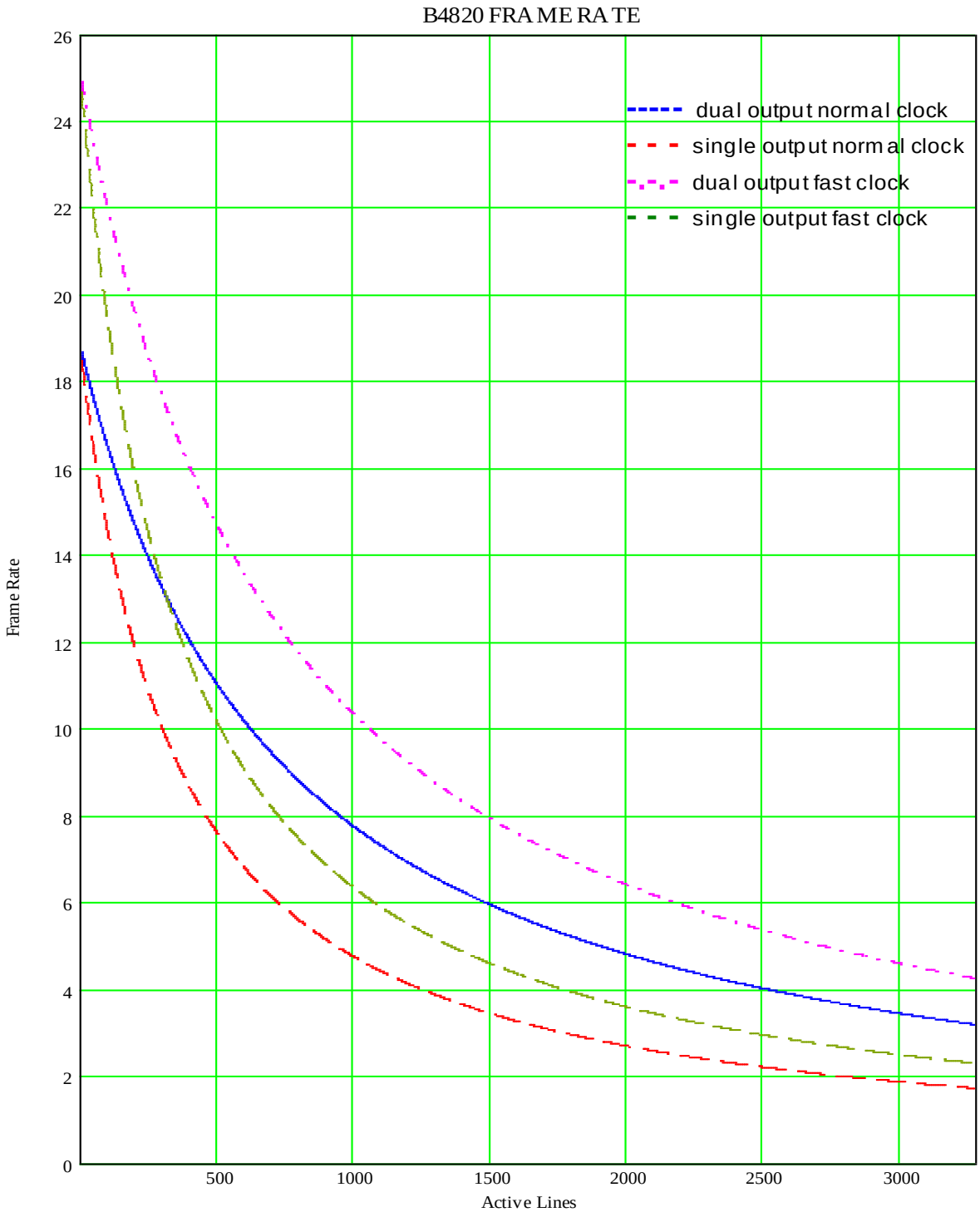

Figure 2.10.1zj – Frame rate vs. vertical window size for B4820.

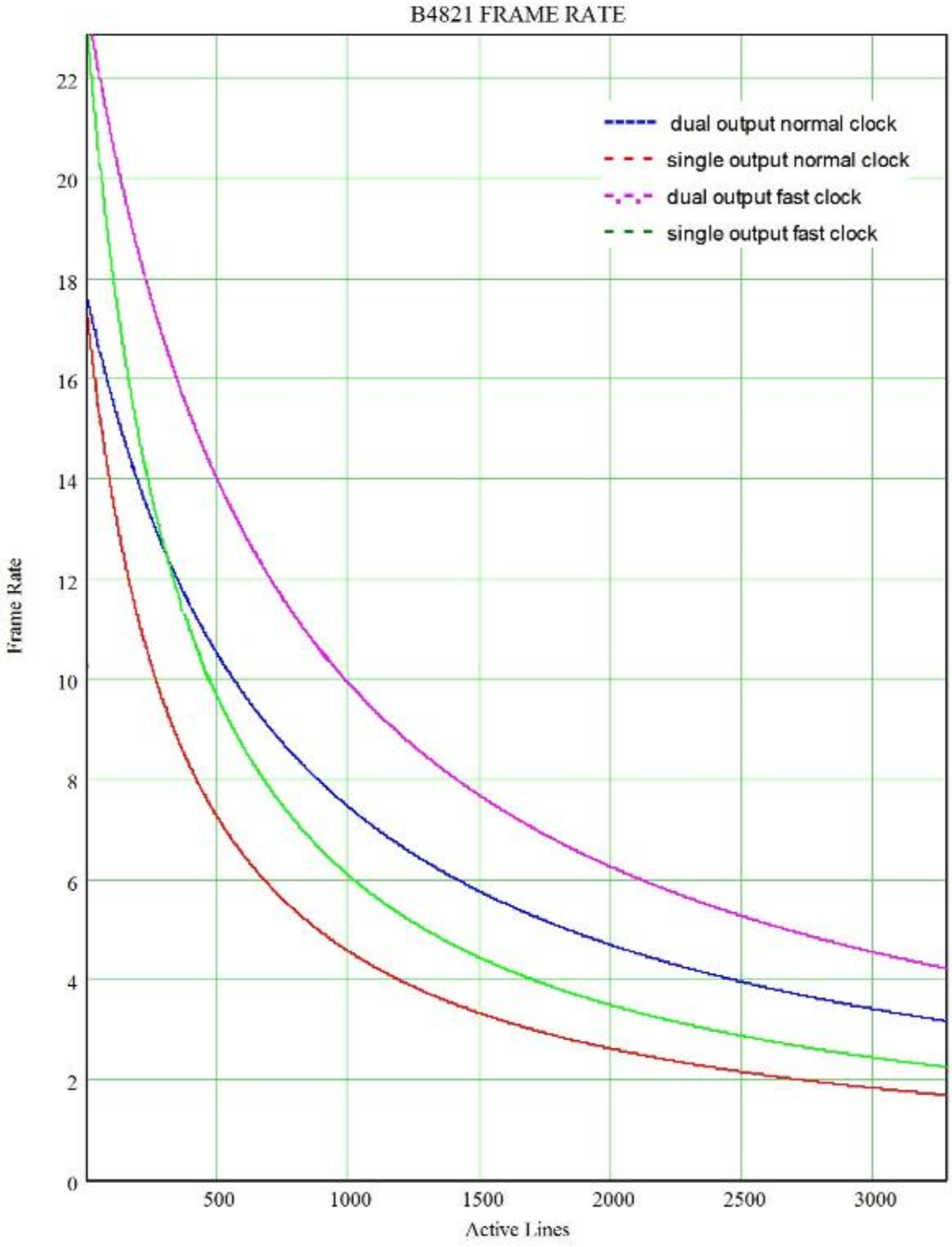

Figure 2.10.1zk – Frame rate vs. vertical window size for B4821

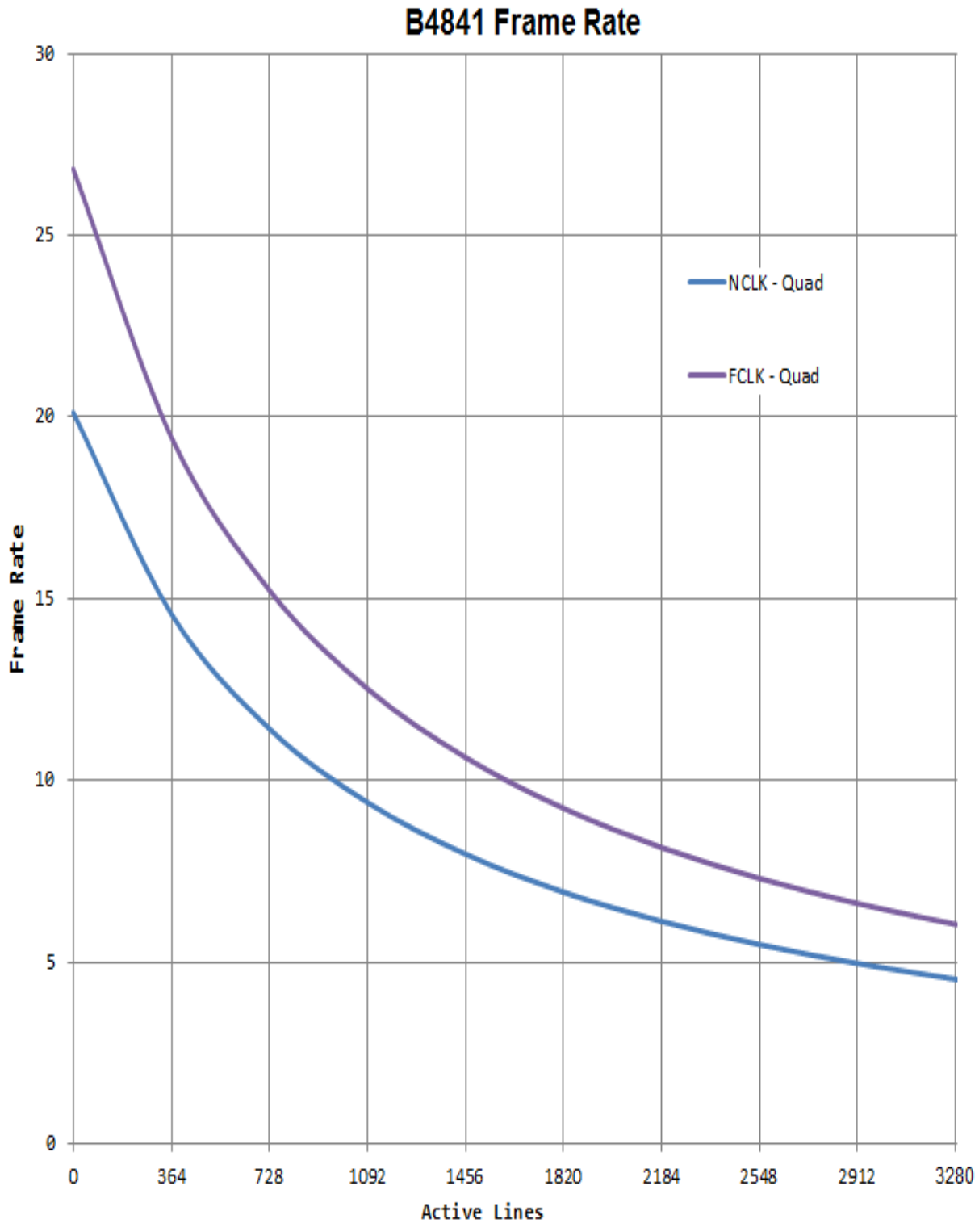

Figure 2.10.1zl – Frame rate vs. vertical window size for B4841

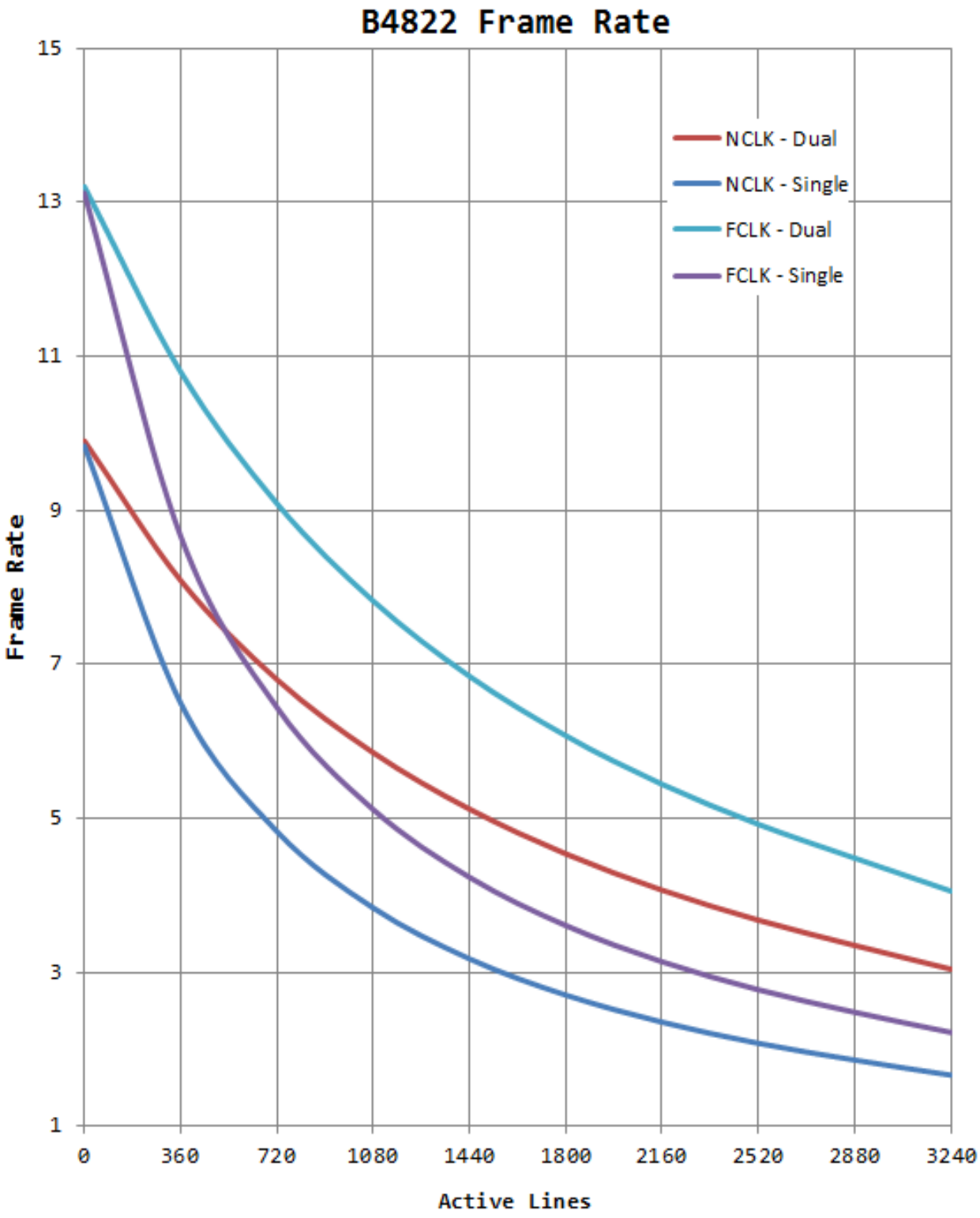

Figure 2.10.1zm – Frame rate vs. vertical window size for B4822

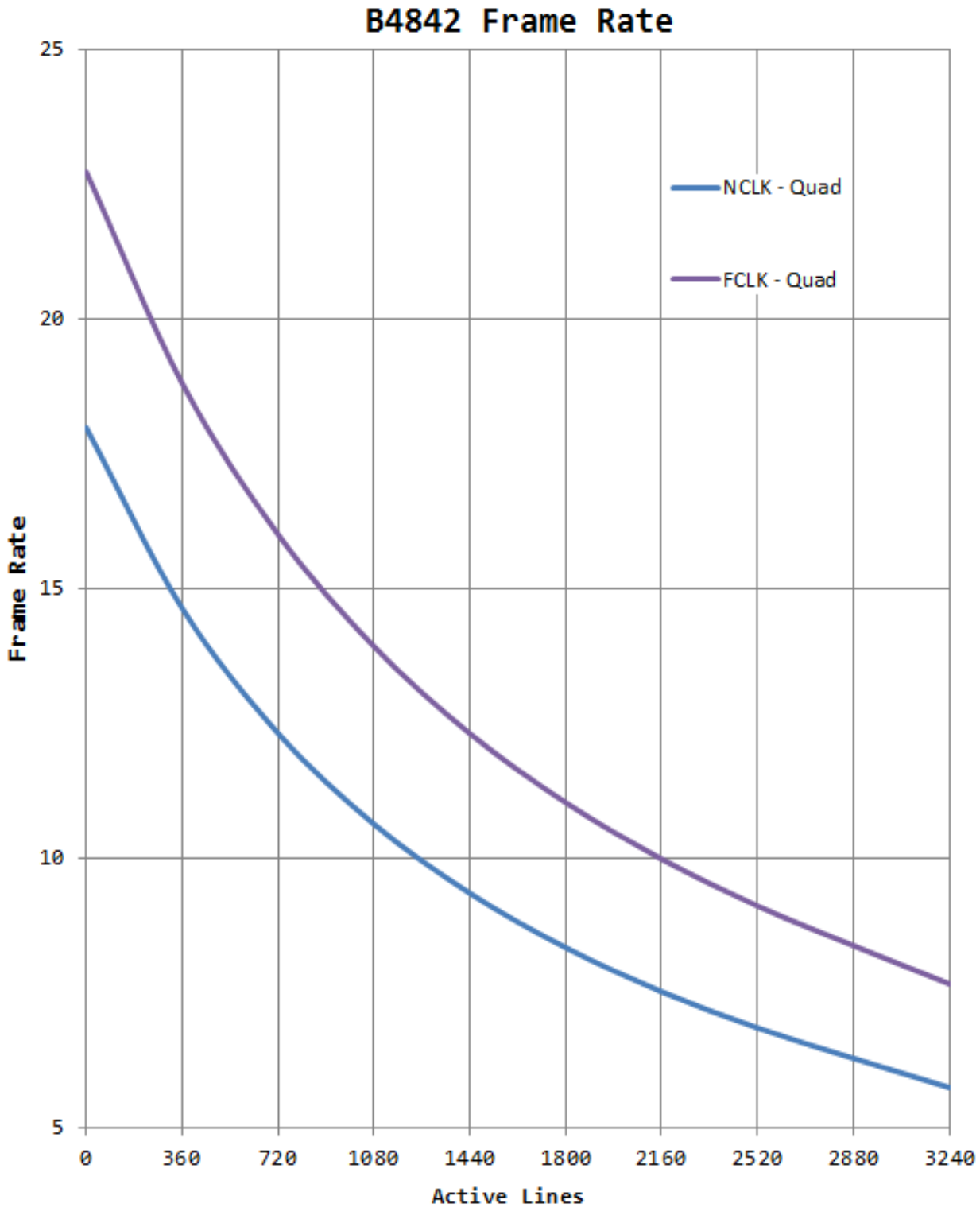

Figure 2.10.1zn – Frame rate vs. vertical window size for B4842

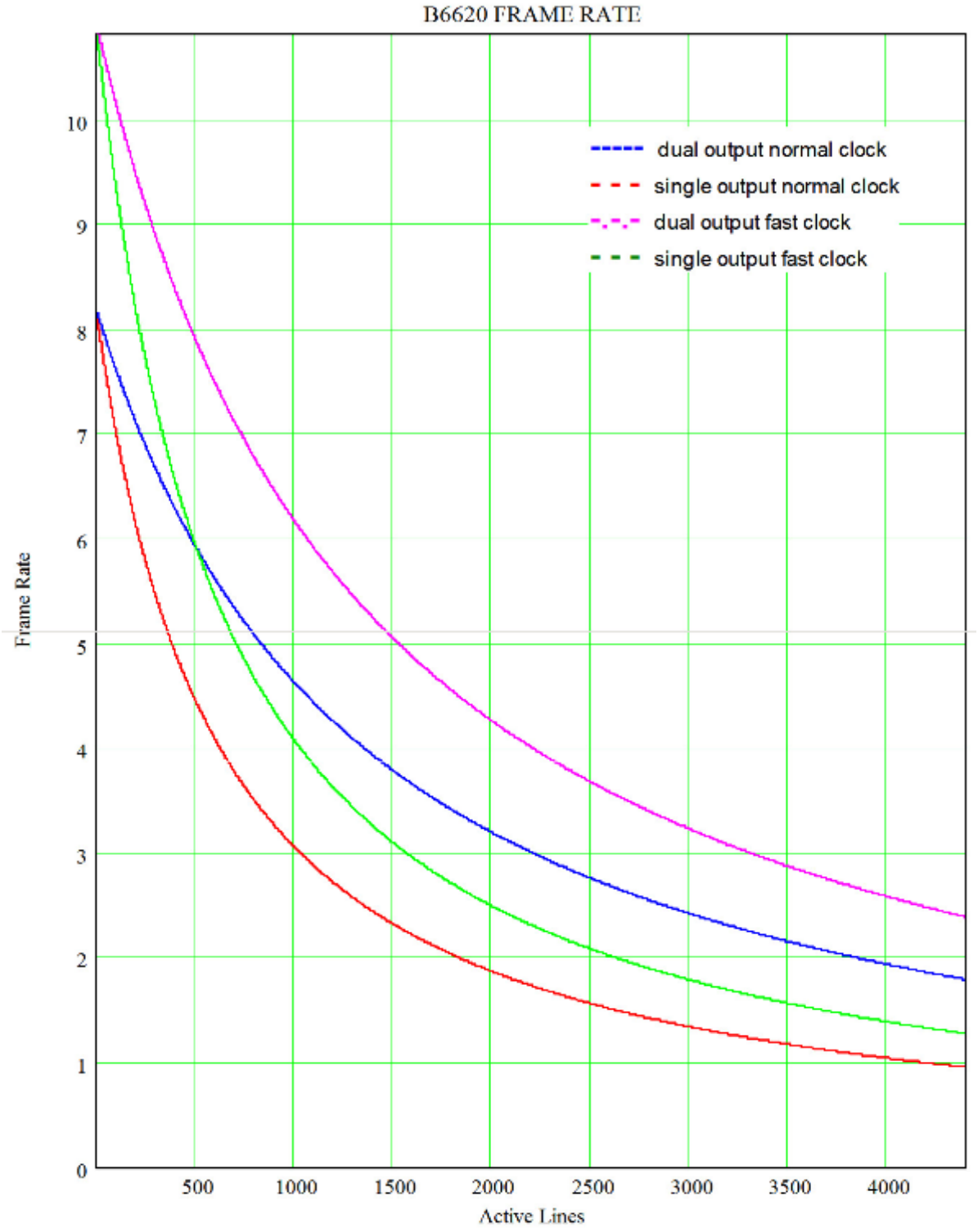

Figure 2.10.1zo – Frame rate vs. vertical window size for B6620.

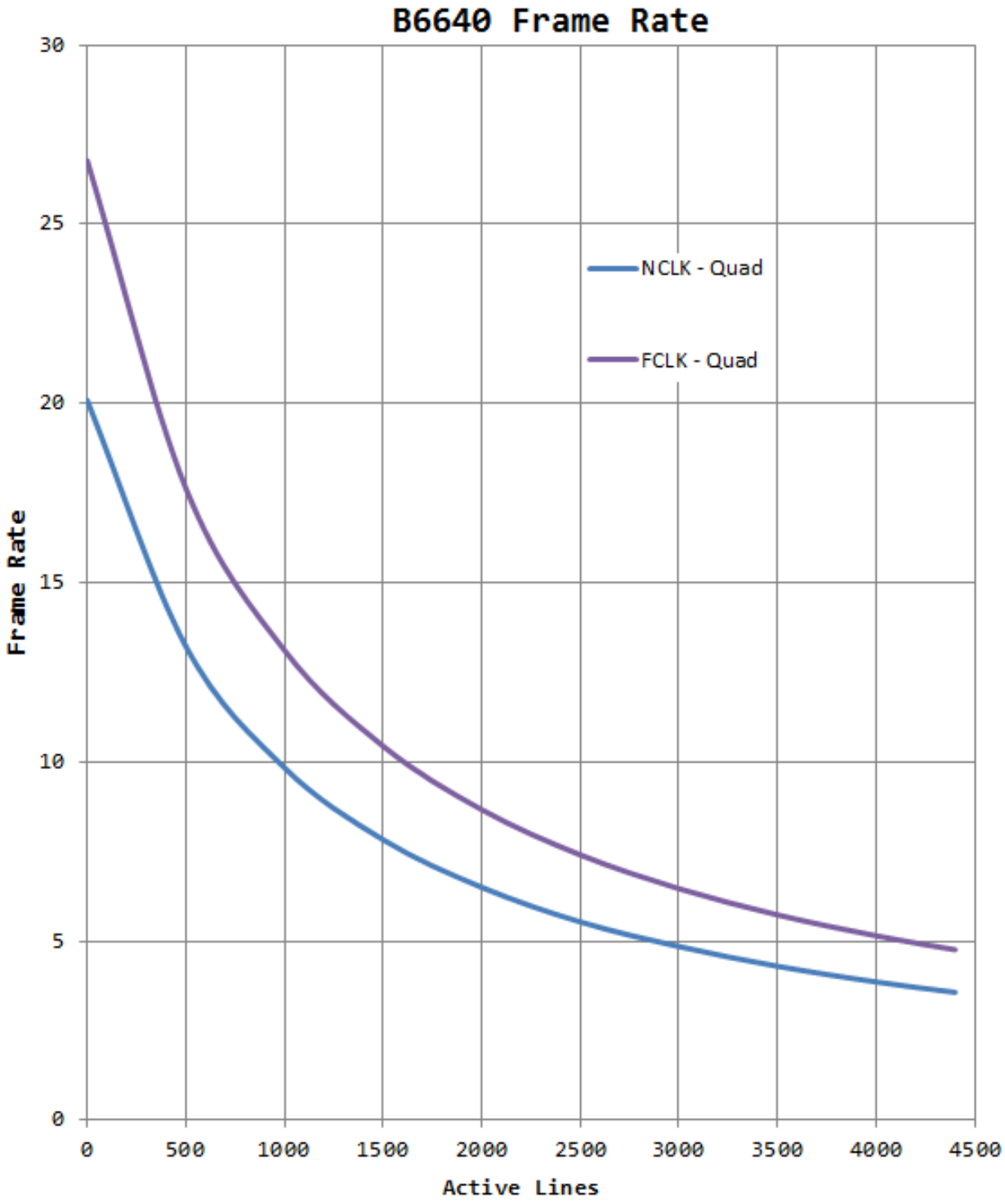

Figure 2.10.1zp – Frame rate vs. vertical window size for B6640.

2.4 BINNING

Horizontal binning combines adjacent pixels in horizontal directions to effectively create larger pixels and less resolution. BOBCAT supports 4 binning modes 2x, 3x, 4x and 8x. In 2:1 horizontal binning mode, two adjacent pixels in each line are summed together (in the horizontal direction), for example, pixels 1+2, 3+4, 5+6, in each line are summed together. Horizontal binning does not affect the frame rate. It does, however, reduce the horizontal resolution by a factor of 2. This occurs because when binning two pixels together, only half of the pixels per line remain. Horizontal binning 2:1 is equivalent to 2:1 sub-sampling in the horizontal direction. The same rule applies for higher binning modes. In horizontal binning mode, the entire image is captured and displayed, which is different than horizontal windowing, where only a portion of the image is captured and displayed.

Vertical binning is a readout mode of progressive scan CCD image sensors where several image lines are clocked simultaneously into the horizontal CCD register before being read out. This results in summing the charges of adjacent pixels (in the vertical direction) from two lines. BOBCAT supports 4 binning modes 2x, 3x, 4x, and 8x. In 2:1 binning for example, the corresponding pixels in every two lines (1+2, 3+4, 5+6 …) are summed together. Vertical binning reduces the vertical resolution by a factor of 2, and almost doubles the frame rate. This occurs because when binning two lines together, only half of the lines need to be read out. Vertical binning 2:1 is equivalent to 2:1 sub-sampling in the vertical direction. The same rule applies for higher binning modes. In vertical binning, the entire image is captured and displayed, which is different than vertical windowing, where only a portion of the image is captured and displayed.

Horizontal and Vertical binning can be used simultaneously – Figure 2.11. Horizontal and vertical binning can work simultaneously with AOI. The corresponding image sizes and frame rates for different binning modes are shown in Table 2.3a, Table 2.3b and Table 2.3c. "**H size"** shows the image size for different LVAL selections, "**V size"** shows the image size for different FVAL selections, "**Speed"** shows the camera speed for slow and fast speed modes. The speed difference is shown for the bigger LVAL/FVAL value.

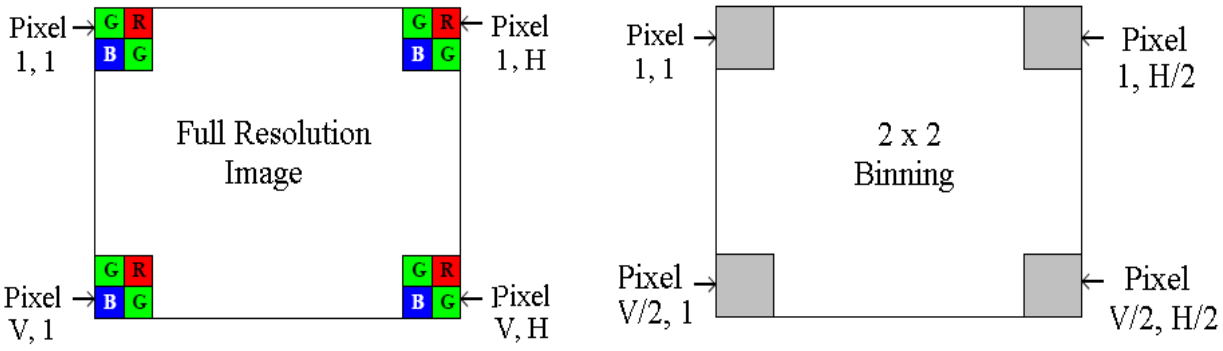

Figure 2.11 – 2:2 Horizontal and vertical binning

Camera	2:1 H Binning		3:1 H Binning		4:1 H Binning		8:1 H Binning	
	H Size	Speed	H Size	Speed	H Size	Speed	H Size	Speed
B0610	324/320	110/137	216/213	110/137	162/160	110/137	81/80	110/137
B0620	324/320	207/259	216/212	207/259	162/160	207/259	80/80	207/259
B1020	516/512	60/74	344/341	60/74	258/256	60/74	129/128	60/74
B1310	648/640	26/39	432/426	36/39	324/320	26/39	162/160	26/39
B1320	656/640	68/85	437/426	68/85	328/320	68/85	164/160	68/85
B1410	696/680	24/31	464/453	24/31	348/340	24/31	174/170	24/31
B1411	696/680	24/31	464/453	24/31	348/340	24/31	174/170	24/31
B1610	810/814	17/25	542/540	17/25	405/407	17/25	202/203	17/25
B1620	804/800	35/44	536/532	35/44	402/400	35/44	200/200	35/44
B1621	816/800	34/42	544/532	34/42	408/400	34/42	204/200	34/42
B1920	960	33/41	640	33/41	480	33/41	240	33/41
B1921	976/960	32/40	650/640	32/40	488/480	32/40	244/240	32/40
B1922	970/966	20/27	646/644	20/27	484/482	20/27	242/240	20/27
B2020	1028/1024	16/20	686/682	16/20	514/512	16/20	256/256	16/20
B2320	1176/1168	16/20	784/778	16/20	588/584	16/20	292/294	16/20
B2510	1228/1224	6.5/9.6	818/816	6.5/9.6	614/612	6.5/9.6	306/306	11/16
B2520	1228/1224	11/16	818/816	11/16	614/612	11/16	306/306	11/16
B3320	1656/1648	9/11	1104/1098	9/11	828/824	9/11	414/412	9/11
B3340	1656/1648	17/21	1104/1098	17/21	828/824	17/21	414/412	17/21
B4020	2016/2004	4.8/6.5	1344/1336	4.8/6.5	1008/1002	4.8/6.5	504/500	4.8/6.5
B4820	2452/2436	3.2/4.3	1634/1624	3.2/4.3	1226/1218	3.2/4.3	612/608	3.2/4.3
B4821	2460/2448	3.1/4.2	1640/1632	3.1/4.2	1230/1224	3.1/4.2	614/612	3.1/4.2
B6620	3300/3288	1.8/2.4	2200/2192	1.8/2.4	1650/1644	1.8/2.4	822/824	1.8/2.4
B6640	3300/3288	3.5/4.7	2200/2192	3.5/4.7	1650/1644	3.5/4.7	822/824	3.5/4.7

Table 2.4a – Image sizes and frame rates for different H binning modes

Camera	1:2 V Binning		1:3 V Binning		1:4 V Binning		1:8 V Binning	
	V Size	Speed	V Size	Speed	V Size	Speed	V Size	Speed
B0610	224/220	210/263	162/160	301/376	122/120	390/486	61/60	676/846
B0620	244/240	376/470	162/160	526/646	122/120	658/794	61/60	972/1215
B1020	516/512	100/125	344/341	129/161	258/256	151/188	129/128	202/253
B1310	483/480	46/68	322/320	63/90	241/240	77/107	120/120	115/152
B1320	364/360	116/145	242/240	153/191	182/180	180/225	91/90	248/310
B1410	520/512	41/52	346/341	55/68	260/256	67/82	130/128	99/115
B1411	520/512	42/54	346/341	58/72	260/256	71/87	130/128	112/131
B1610	618/610	30/45	412/410	42/61	309/305	53/74	154/152	82/110
B1620	604/600	62/77	402/400	84/105	302/300	102/128	151/150	150/188
B1621	616/600	57/72	94/97	75/94	308/300	89/111	154/150	122/153
B1920	540	59/74	360	81/101	270	99/124	135	150/187
B1921	556/540	55/68	370/360	72/90	278/270	86/107	139/135	120/150
B1922	730/726	33/45	486/484	43/58	365/363	50/67	182/181	67/90
B2020	1030/1024	29/37	686/682	41/51	515/512	50/62	257/256	77/96
B2320	884/876	28/36	589/584	38/47	442/438	45/56	219/221	63/79
B2510	1029/1025	12/16.5	686/683	16/22	514/512	19/26	257/256	29/35
B2520	1029/1025	19/25	686/683	24/31	516/515	28/35	257/256	38/43
B3320	1244/1236	15/19	829/824	20/25	618/622	24/31	311/309	35/44
B3340	1244/1236	30/37	N/A	N/A	618/622	48/61	311/309	71/89
B4020	1344/1336	8/11	896/890	10/14	672/668	12/16	336/334	16/22
B4820	1640/1624	5/7	1093/1082	7/9	820/812	8/11	410/406	11/15
B4821	1640/1632	5/7	1093/1088	7/10	820/816	9/11	410/408	12/16
B6620	2200/2192	3/4	1466/1461	5.2/3.9	1100/1096	4.6/6.1	550/548	6.4/8.5
B6640	2200/2192	6/8	N/A	N/A	1100/1096	8.3/12	550/548	13/17

Table 2.4b – Image sizes and frame rates for different V binning modes

B0620	1:2 V Binning		1:3 V Binning		1:4 V Binning		1:8 V Binning	
	V Size	Speed	V Size	Speed	V Size	Speed	V Size	Speed
Center Single	240	525	N/A	N/A	N/A	N/A	N/A	N/A
Center Dual	240	896	N/A	N/A	N/A	N/A	N/A	N/A

Table 2.4c – B0620 Center mode image sizes and frame rates during V binning

Horizontal and vertical binning can work simultaneously with AOI. Although vertical and horizontal binning are done in different domains, there are no differences in the way the AOI with binning works.

Vertical Binning is done in the time domain, where the data from the binned lines is added in the CCD. The vertical binning is performed first, and the vertical AOI is second. The vertical AOI settings are referenced to the binned image. If the user wants to set a vertical window of 200 lines, the user has to put 200 in the AOI height register regardless of the selected vertical binning mode.

Horizontal Binning is done in the digital domain, where the data from the binned pixels is added digitally. The horizontal binning is performed first, and the horizontal AOI is second. The horizontal AOI settings are referenced to the binned image If the user wants to set a horizontal window in the binned image with width 200 the user has to put 200 in the AOI width register regardless of off the selected horizontal binning mode.

Figure 2.11a illustrates the simultaneous usage of AOI and H & V binning. The original image is 640 x 480. Then after 2 x 2 binning the resultant image is 320 x 240. Then a master AOI is enabled with offset X = 80, offset Y = 120, width = 200 and height = 100. Then a slave AOI is enabled with offset X = 50, offset Y = 30, width = 45 and height = 40. In the left side, the slave AOI is enabled in "Include" mode, and in the right side the same AOI is enabled in "Exclude" mode. When enabled as "Include" only the selected slave AOI region is displayed, the rest (of the master AOI) is black. When enabled as "Exclude" only the selected slave AOI region is black, the rest is the selected master image

CAUTION NOTE

1. Vertical and horizontal binning cannot be performed when the Center mode is used for B1410, B1610 and B2520.
2. Horizontal or vertical binning used alone changes the aspect ratio of the image in the vertical or horizontal direction. To correct this, use identical horizontal and vertical binning modes simultaneously.
3. The frame-grabber vertical and horizontal resolution should be changed to reflect the actual number of active pixels and lines.
4. Vertical binning may cause blooming for saturated signal levels.
5. Color version users – horizontal or vertical binning used alone will create color distortions. If used simultaneously, the resulting image will be monochrome.

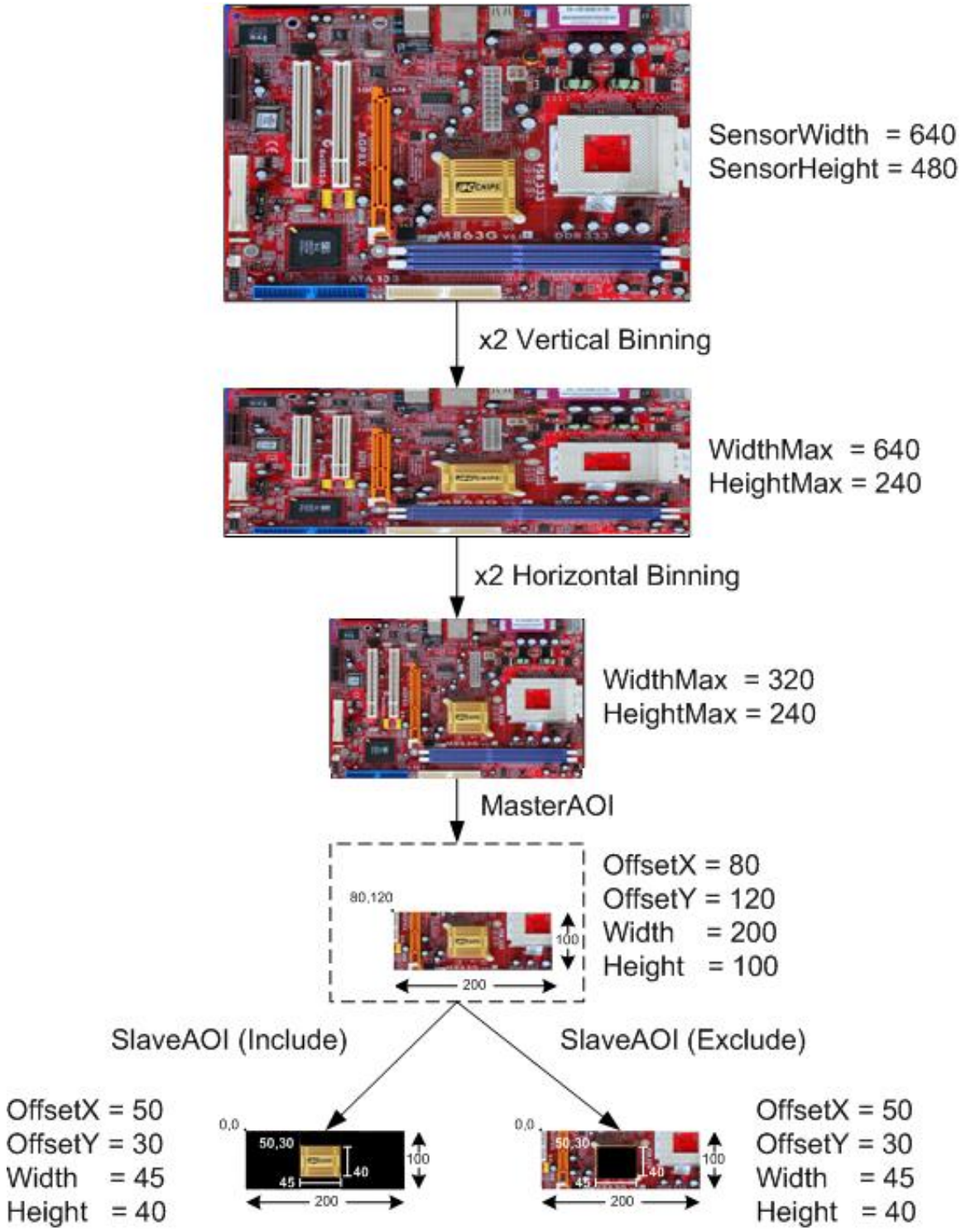

Figure 2.11a – AOI within horizontal and vertical binned image.

2.5 EXPOSURE CONTROL

2.5.1 Internal Exposure Control - Electronic Shutter

During normal camera operation, the exposure time is fixed and determined by the readout (frame) time. The electronic shutter can be used to precisely control the image exposure time under bright light conditions. The electronic shutter does not affect the frame rate; it only reduces the number of electrons collected. Positioning a short pulse "SHUTTER", with respect to the vertical transfer pulse, VCCD – Figure 2.12, sets the exposure time. The electronic shutter pulse can be positioned within the entire frame period with a precision of 1.0us. The maximum exposure is frame time dependent and the minimum exposure is ~ 2 microseconds (camera dependent).

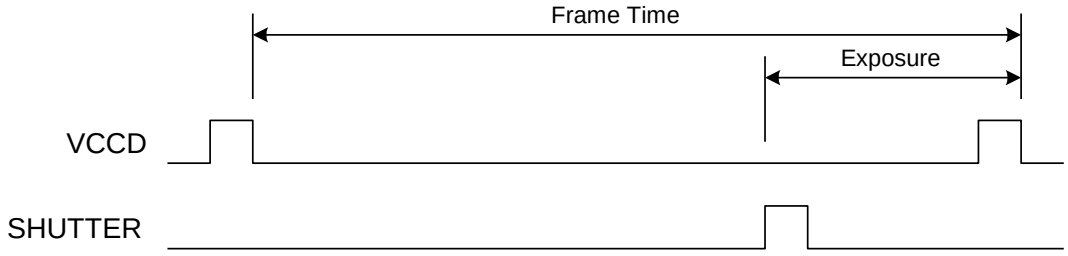

Figure 2.12 – Electronic shutter position

2.5.2 External exposure control

The camera exposure can be controlled using an external pulse, supplied to the camera. The pulse duration determines the exposure. For stable operation, this pulse MUST be synchronized with the camera frame timing. Please refer to "I/O Control" section for pulse mapping information.

2.5.3 Variable Frame Time – Programmable Line and Frame Time

Variable frame time mode provides the ability to run the camera in full resolution and a frame rate slower than the nominal camera frame. This has two effects: 1) it reduces the bandwidth requirements on the camera output and 2) it increases the exposure time for the frame. During normal camera operation (no shutter), the nominal frame rate determines the integration time. The desired frame rate, and thus the new integration time, can be achieved by moving the vertical transfer pulse, VCCD, beyond the normal integration period (the standard frame time) – Figure 2.13. The resultant frame rate can be calculated using formula 2.2. The user can

program the camera integration (frame time) from the nominal camera frame time to 16 seconds (~ 0.0625 fps) with a precision of 1.0 us.

Frame rate [fps] = 1 / frame time [sec] (2.2)

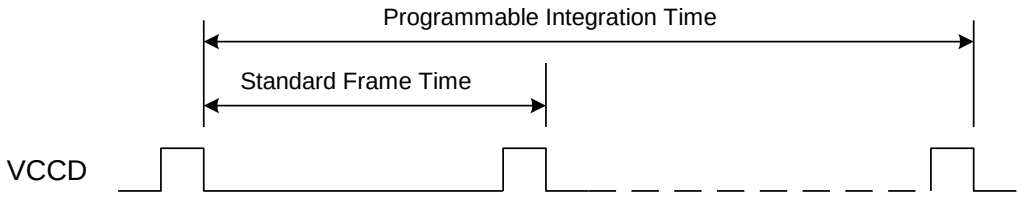

Figure 2.13 – Programmable frame time

CAUTION NOTE

1. The maximum frame rate (and minimum frame time) is determined by the camera mode of operation. If the user enters a higher frame rate than the allowed one, the image will halt. Programmable Frame Time cannot be enabled in Trigger mode.
2. When programmable line time and programmable frame time are to be enabled simultaneously, enable line time first, set the appropriate line value, and then enable the programmable frame time. If you change the line time value while the frame time is enabled, please note that you might need to re-adjust the frame time value.
3. If the frame time is greater than 500ms the camera has to be kept still otherwise a motion smear will appear on the image.

2.5.4 Automatic Exposure Control (AEC)

The camera can be set to automatic exposure (and gain) control in order to keep the same image brightness during changing light conditions. Both modes – automatic exposure and automatic gain can be enabled simultaneously. In this mode, the user sets the image brightness (luminance) to be maintained, and the camera adjusts the exposure accordingly. The user can select the average or peak brightness to be maintained. The camera starts with changing the exposure within the preset by the user min-max limits. If one of the exposure limits has been reached, the camera indicates the limit has been reached and keeps the value until the light condition change. The speed of convergence (how fast the camera stabilizes after change), can be preset by the user (four possible options are available). The AEC algorithm samples all pixels for the entire frame, but the user can select only a portion of the image (AOI) to be used as a sample collecting region. The camera displays the

current luminance, current exposure and current gain. For auto gain control refer to Automatic Gain Control (AGC) section.

CAUTION NOTE

1. In some bright light conditions, a very small exposure values (~ microseconds) must be used. In such cases the camera response is not linear, i.e. equal exposure increments do not result in equal brightness increase. In some rare occasions during such conditions, an image brightness oscillation (image flipping from bright to dark) could occur. To prevent this, please change the AEC/AGC setting (exposure speed, luminance level or AOI), or change the lens iris.

2.5.5 Automatic Iris Control (AIC)

The camera has a built-in auto iris control feature, which is hardware compatible with a "Video" auto iris lens. If enabled, the camera provides an analog video signal (via 12 pin HIROSE connector), which is used by the lens to control the iris.

2.6 EXTERNAL TRIGGER

2.6.1 Triggering Inputs

In the normal mode of operation, the camera is free running. Using the trigger mode allows the camera to be synchronized to an external timing pulse. There are three input modes available for external triggering – software (CC), internal (pulse generator), and external. Please note that the desired trigger input has to be mapped to corresponding camera input. For more information, please refer to the I/O Control section.

- "**External**" – the camera receives the trigger signal coming from the connector located on the back of the camera.
- "**Computer**" – the camera receives the trigger signal command from the frame-grabber.
- "**Internal**" – the camera has a built in programmable pulse generator – refer to "Pulse Generator" section. In Internal triggering mode, the camera receives the trigger signal from the internal pulse generator.
- "**Software**" – the camera receives the trigger signal which is computer generated. This input is available only for GigE Cameras. The camera expects a one clock cycles pulse generated by the computer. The trigger exposure is internal register controlled. Pulse duration exposure is not allowed.

2.6.2 Acquisition and Exposure Control

For each trigger input the user can set the trigger edge, the over-trigger conditions, the de-bounce (de-glitch) time, the exposure time, the exposure delay, and the number of frames captured.

1. "**Triggering Edge**" – the user can select the active triggering edge:
   - "**Rising**" – the rising edge will be used for triggering
   - "**Falling**" – the falling edge will be used for triggering
2. "**De-bounce**" – the trigger inputs are de-bounced to prevent multiple triggering from ringing triggering pulses. The user has eight choices of de-bounce interval:
   - "**Off**" – no de-bounce (default)
   - "**10**" μs, "**50**" μs, "**100**" μs, "**500**" μs de-bounce interval
   - "**1.0**" ms, "**5.0**" ms, "**10.0**" ms de-bounce interval
3. "**Trigger Overlap**" – if the next trigger pulse arrives while the previous triggering cycle is in process, the user has three options:

- "**Ignore**" – the next trigger will be ignored, and the camera will continue its present operation.
- "**Accept**" – the next trigger will be used. The camera will stop the present operation, will reset and the new trigger cycle will start.
- "**Accept after Exposure**" – the next trigger will be ignored while the camera is exposing the image. The next trigger will be used only after the image exposure based on the previous trigger has been completed. The camera will stop the present operation, will reset and the new trigger cycle will start.

4. "**Exposure Time**" – the exposure for all frames can be set in two ways:
   - "**Pulse Width**" – the trigger pulse width (duration) determines the exposure.
   - "**Internal**" – the camera internal exposure register determines the exposure. A mid exposure pulse is generated in this mode.
5. **"Frames captured**" – the number of frames captured after the trigger pulse can be programmed from 1 to 65530 frames, or to be free-running.
6. **"Exposure Delay"** – delays the beginning of the exposure with respect to the trigger pulse. The delay can be programmed from 0 to ~16,777 seconds.

CAUTION NOTE

1. The de-bounce interval MUST be smaller than the trigger pulse duration. Adjust the interval accordingly.
2. When Triggering is enabled "Programmable Integration" is not active

2.6.3 Trigger Strobe Control

Along with the shutter pulse, the camera can send one strobe pulse for synchronization with an external light source. The user can set the strobe pulse duration and the delay with respect to the trigger pulse active edge. The maximum pulse duration and the maximum delay can be set up to 16777215 us with 1.0us precision. The strobe pulse can be assigned to "Strobe 1" or "Strobe 2. If the number of frames captured is more than 1, and the user wants to enable the strobe for the next frames, he/she has to using the camera strobe – please refer to "Strobe" section for more information.

2.6.4 Triggering Modes

A. Standard Mode

When the standard triggering mode is enabled, the camera idles and waits for a trigger signal. Upon receiving the external trigger signal, the camera clears the horizontal and vertical registers, sends a shutter pulse to clear the pixels and starts

integration – Figure 2.14. Upon receiving the trigger signal the camera starts integration for the frame, completes the integration, and transfers the information to the vertical registers and then captures the image is being read out. There is no delay between the trigger rising edge and the exposure start. The exposure is set by the trigger pulse duration or by internal exposure register. The number of frames captured after each trigger pulse can be programmed. This completes the current trigger cycle and the camera idles until the next trigger pulse.

CAUTION NOTE

The time interval between the trigger pulses must be greater than the combined exposure and frame time. If the time between the triggers is shorter, the frame read-out cycle will be interrupted and part of the frame will be lost.

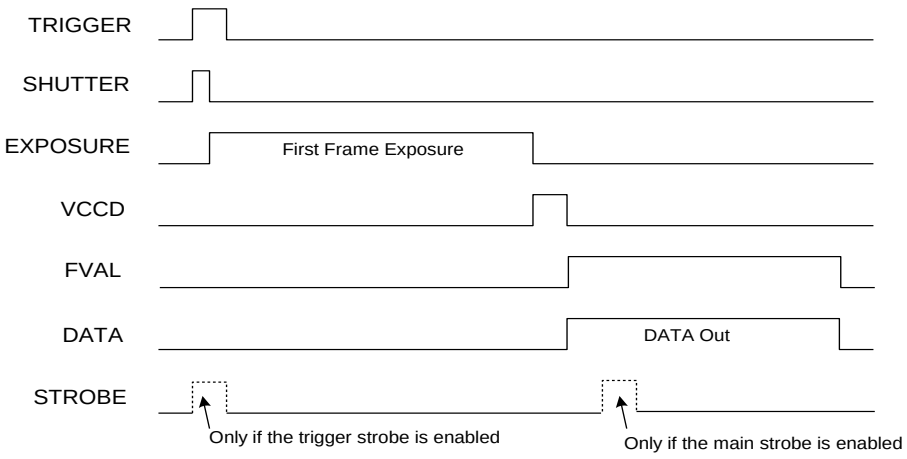

Figure 2.14 – Standard triggering timing

B. Fast Synchronized Triggering – Rapid Capture

Fast synchronized triggering (a.k.a. rapid capture) provides the ability to run the camera in a slave mode, allowing several cameras to be synchronized with an external master trigger signal. This mode also enables the camera to run close to its original frame rate. If this mode is enabled, the camera idles and waits for a trigger signal to come from the selected. Upon receiving the trigger signal, the camera starts integration until the next trigger is received. Then the information is transferred to the registers and read out. During this time, the next frame is exposed – Figure 2.15. In this mode, the camera exposure can be controlled with the internal shutter or with the trigger pulse width. If the shutter is not used, the camera exposure time will be equal to the time between the trigger pulses (trigger period). If the internal shutter is used the exposure control slider sets the exposure – Figure 2.15. If the trigger pulse

width exposure mode is used, the exposure always starts on the rising edge of the trigger signal and ends on the falling edge. The number of frames captured is set to 1 and cannot be changed.

CAUTION NOTE

1. The time interval between the trigger pulses must be greater than the corresponding camera frame time. If the time between the triggers is shorter, the frame read-out cycle will be interrupted and part of the frame will be lost. For accurate exposure times when using the internal exposure control timer, especially when short exposure times are used, the period of the trigger pulses must be stable and unvarying.

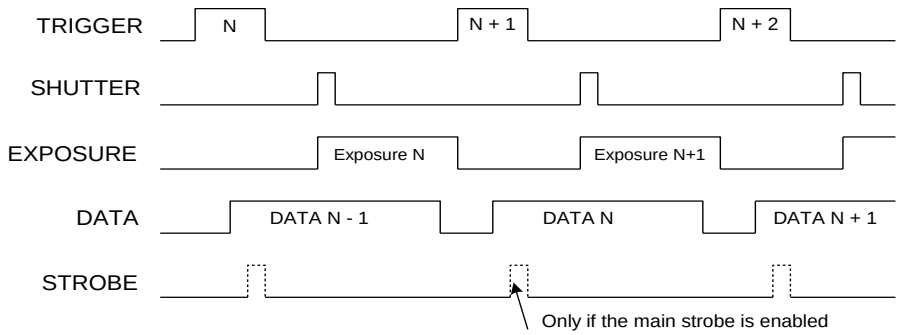

Figure 2.15 – Fast synchronized triggering - rapid capture

C. Double Exposure Triggering

Double exposure allows two events (two images) to be captured in rapid succession using a single trigger pulse. In this mode, the camera idles and waits for a trigger signal to come from the selected source. Upon receiving the external trigger signal, the camera clears the horizontal and vertical registers, and starts integration. There is NO DELAY between the active trigger edge of the trigger pulse and the beginning of the integration. Upon receiving the trigger signal the camera starts integration for the first frame, completes the integration, transfers the information to the vertical registers and then captures the second image. While capturing the second image the first one is being read out. After exposing the second image, the information is transferred to the vertical registers and read out – Figure 2.16. This completes the current trigger cycle and the camera idles until the next trigger pulse. In this mode, the camera exposure can be controlled with the internal shutter or with the trigger pulse width. The number of frames captured is set to 2 and cannot be changed. There is NO DELAY between the frames captured. The minimum time between the frames is ~ 200 ns.

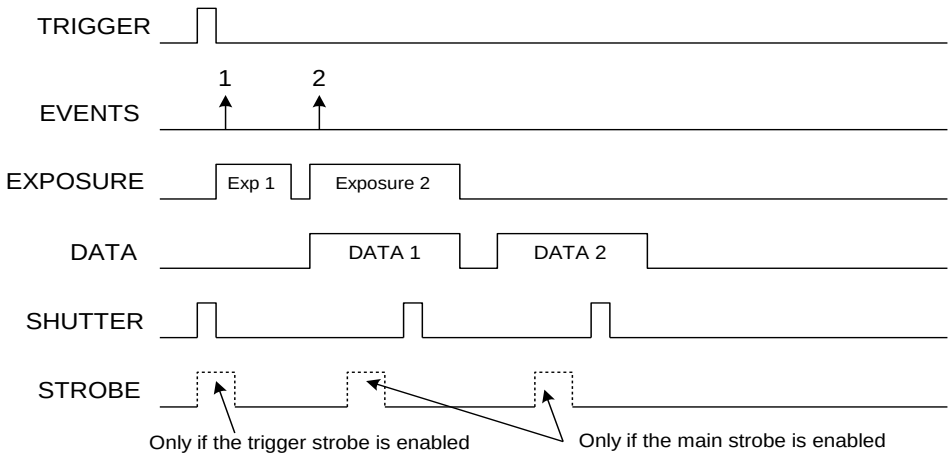

Figure 2.16 – Double exposure triggering

CAUTION NOTE

The Vertical Frame Transfer period is the time required for all pixel charges to be transferred under the vertical registers after the frame exposure ends. This finite time imposes some restrictions for minimum exposure duration in standard and double triggering modes. The minimum exposure period is camera dependent as shown below:

A. B0610, B0620, B1020, B1320, B1621, B1921, B1922, B2320 and B3320 – minimum exposure is 2 us,
B. B1410, B1610 and B4821 – minimum exposure is 4 us,
C. B2510, B2520, and B6620 – minimum exposure is 8 us.
D. B1620, B1920, B2020, B4020 and B4820 – minimum exposure is 10 us.

D. Frame Accumulation Triggering

When the Frame Accumulation triggering mode is enabled, the camera idles and waits for a trigger signal. Upon receiving the external trigger signal, the camera clears the horizontal and vertical registers, sends a shutter pulse to clear the pixels and starts integration – Figure 2.17. Upon receiving the trigger signal the camera starts integration for the first frame, completes the integration, transfers the information to the vertical registers and then waits for the next trigger. Upon receiving the next trigger signal the camera starts integration for the next frame, completes the integration, transfers the information to the vertical registers and then waits for the next trigger. The number of triggers used is set by the "Pulses per Capture" register. After the last trigger has been received the information is being read out. This completes the current trigger cycle and the camera idles until the next trigger pulse. In this mode, the camera exposure can be controlled with the internal shutter or with the trigger pulse width.

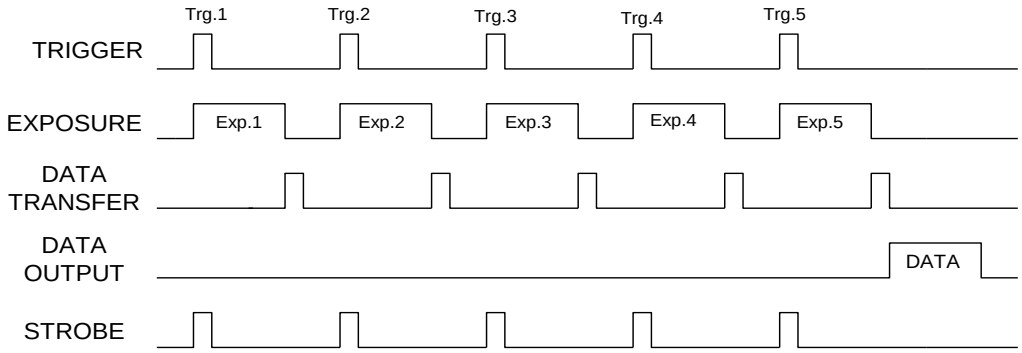

Figure 2.17 – Frame accumulation triggering

E. Asynchronous Triggering

When the Asynchronous triggering mode is enabled, the camera is free running (no horizontal and vertical flushing prior to trigger). Upon receiving the external trigger signal, the current CCD timing stops, all camera lines are rapidly flushed, and a new frame starts – Figure 2.18. This completes the current trigger cycle, the camera free running and waits for the next trigger pulse. In this mode, the camera exposure can be controlled with the internal shutter or with the trigger pulse width. The time required for rapid line flush (all charges stored in the vertical registers are cleared) is camera dependent and if the camera is triggered via CC line, and the camera exposure is determined by the duration of the CC pulse, the CC pulse duration must be longer than the rapid flush time, as shown below.

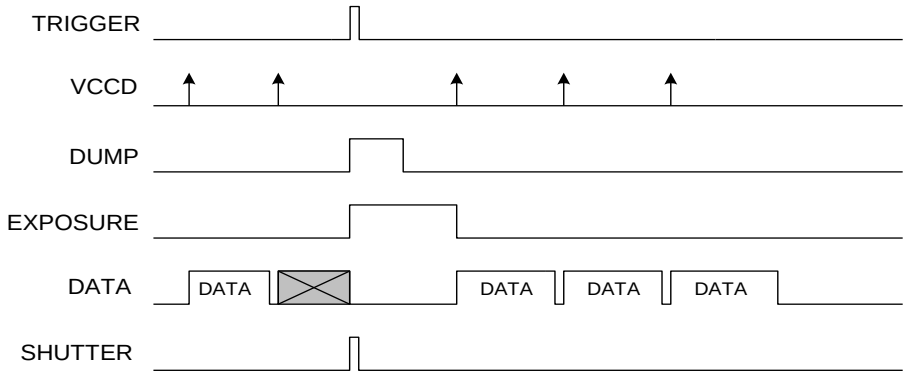

Figure 2.18 – Asynchronous triggering

F. Exposure Delay

The user can delay the beginning of the triggering sequence (beginning of the exposure) with respect to the trigger pulse. The delay can be programmed from 0 to ~16,777 seconds.

2.7 STROBE OUTPUT

The strobe output is used to synchronize an external light source with the camera timing, and thus to maximize the camera efficiency in low light level conditions. The optimal strobe signal position is achieved by the positioning of the STROBE pulse, with respect to the vertical transfer pulse VCCD (end of the frame) - Figure 2.19. BOBCAT supports two independent strobe signals. Each strobe pulse can be positioned within the entire frame timing period with a precision 1.0 us. The strobe duration can be seen from 1.0 us to 65535 us with a precision of 1.0us. The internal camera timing has a flag for odd and even frames. Each strobe can be assigned to every frame, only odd frames, only even frames, or the strobe can be disabled. The actual strobe signal can be mapped to the corresponding camera outputs – please refer to the "I/O Control" section.

CAUTION NOTE

During Standard triggering mode, the odd/even frame flag resets with each new trigger. In this case, if the number of frames is set to 1 the strobe will be present only in "Every Frame" and "Odd Frames".

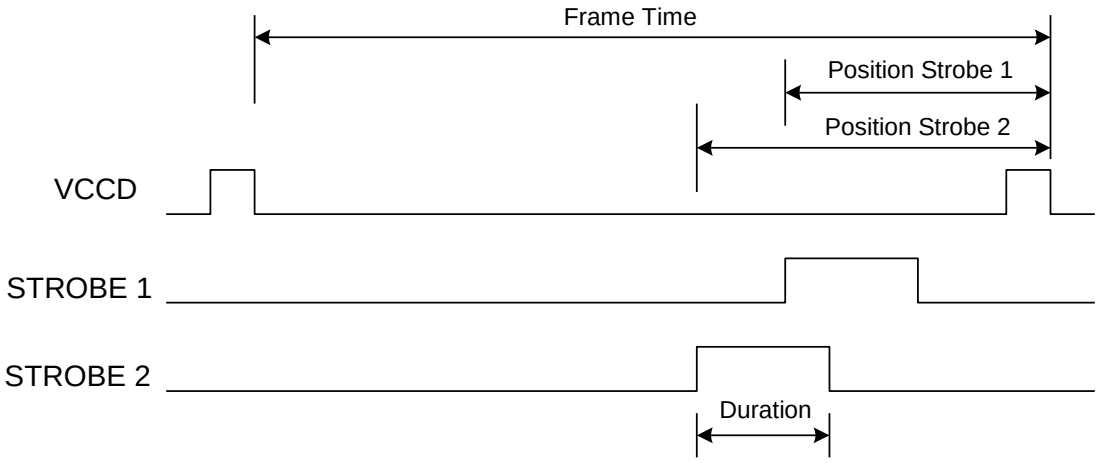

Figure 2.19 – Strobe pulse positioning

2.8 GAIN and OFFSET

2.8.1 Analog Domain – manual control

The camera has dual analog signal processors (or Analog Front End – AFE), one per channel. It features one dual processor, each containing a differential input sample-and-hold amplifier (SHA), digitally controlled variable gain amplifier (VGA), black level clamp and a 14-bit ADC. The programmable internal AFE registers include independent gain and black level adjustment. There are 1024 possible gain levels (**gcode** 0 to 1023) and 1024 offset (clamp) levels (**ocode** 0 to 1023). Figure 2.20 shows the relationship between the video signal output level and gain/offset. Theoretically, the black level should reside at 0 volts and the gain changes should only lead to increasing the amplitude of the video signal. Since the camera has two separate video outputs coming out of the CCD, there is always some offset misbalance between the video outputs. Thus, changing the AFE gain leads to a change in the offset level and to a further misbalance between the two video signals. To correct the balance between two signals for a particular gain, the user should always adjust the offset for each output – refer to the Camera Configuration section. The overall camera gain can be calculated using formula 2.3, where Fixed Gain (FG) is user selectable (- 3dB, 0, 3 dB, or 6dB).

$$\text{VGA Gain [dB]} = \text{FG [dB]} + 0.0351 \times \textbf{gcode} \qquad (2.3)$$

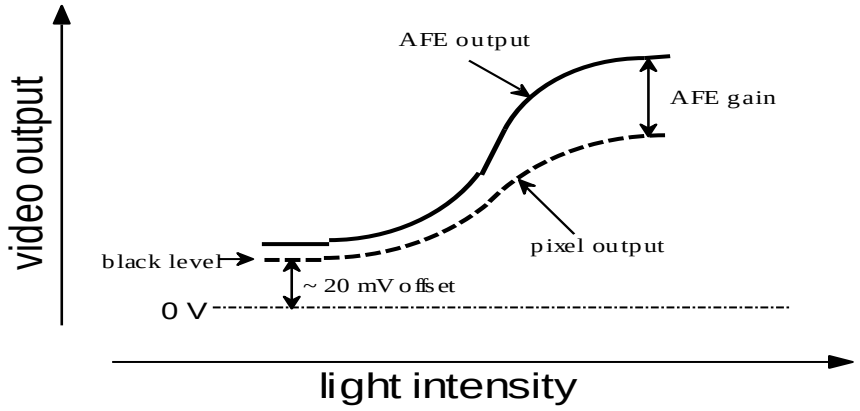

Figure 2.20 – AFE gain and offset

2.8.2 Digital Domain – manual control

The camera has a built in digital gain and offset control. There are 20 possible digital gain levels from 1.0x to 3.0x with step of 0.1x, and 1024 offset levels from (–511, to + 511).

2.8.3 Automatic Gain Control (AGC)

The camera can be set to automatic gain (and exposure) control in order to keep the same image brightness during changing light conditions. In this mode, the user sets the image brightness (luminance) to be maintained, and the camera adjusts the gain accordingly. The user can select the average or peak brightness to be maintained. The camera starts with changing the gain within the preset by the user min-max limits. If one of the gain limits has been reached, the camera indicates the limit has been reached and keeps the value until the light condition change. The speed of convergence (how fast the camera stabilizes after change), can be preset by the user (four possible options are available). If both modes, automatic exposure and automatic gain are enabled simultaneously, the camera starts with changing the exposure first within the preset by the user min-max limits. If one of the exposure limits has been reached, the camera engages the analog gain, and changes it within the preset by the user min-max limits. The AGC algorithm samples all pixels for the entire frame, but the user can select only a portion of the image (AOI) to be used as a sample collecting region. The camera displays the current luminance, current exposure and current gain. For auto exposure control refer to Automatic Exposure Control (AEC) section.

2.9 DATA OUTPUT FORMAT

2.9.1 Bit Depth

The internal camera processing of the CCD data is performed in 14 bits. The camera can output the data in 14, 12, 10 or 8-bit format (3x8 RGB for B0610, B1410 and B1610 ONLY). During this standard bit reduction process, the least significant bits are truncated – Figure 2.21.

- **"14-bit" –** All original bits D0 (LSB) to D13 (MSB) are used. This mode is available only for Single Output.

- **"12-bit" –** If the 14-bit original camera data is D0 (LSB) to D13 (MSB), and camera is set to output 12-bit data, the 12 output bits are mapped to D2 (LSB) to D13 (MSB).

- **"10-bit" –** If the 14-bit original camera data is D0 (LSB) to D13 (MSB), and camera is set to output 10-bit data, the 10 output bits are mapped to D4 (LSB) to D13 (MSB).

- **"8-bit" –** If the 14-bit original camera data is D0 (LSB) to D13 (MSB), and camera is set to output 8-bit data, the 8 output bits are mapped to D6 (LSB) to D13 (MSB).

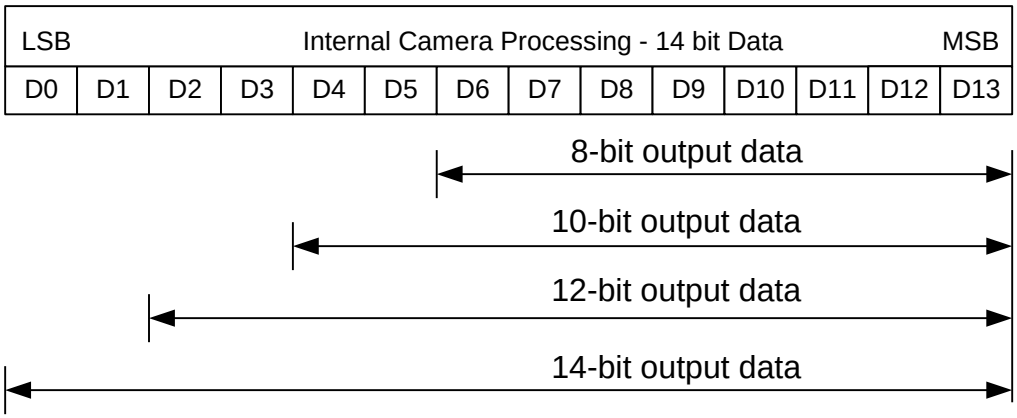

Figure 2.21 – DATA output format

- "**3 Tap RGB**" – In this mode each pixel is sent in 24-bit format (3 x 8-bit RGB), starting with the first pixel of the first line and ending with the last pixel of the line. Each pixel consists of three components R (red), G (green) and B (blue),

which can be only 8 bits deep. This feature is available only for B0610, B1410 and B1610 with FW revision 1.1.7 or later. If your camera has a FW revision 1.1.6 or earlier, please contact IMPERX for more information.

2.9.2 Digital Data Shift

The "Digital Shift" feature allows the user to change the group of bits sent to the camera output and therefore manipulate the camera brightness. The user can implement up to 7 bits left or right digital shift. The internal camera processing of the data is 14 bits. If the camera is set to output 10 bits of data then the four least significant bits are truncated. In some cases, the user may need to convert from 14 to 10 bits by preserving the 4 least significant bits and truncating the 4 most significant ones – Figure 2.22. Please note that the camera signal-to-noise ratio will be reduced using the data shift option.

Camera Data - 14 bit													
D13	D12	D11	D10	D9	D8	D7	D6	D5	D4	D3	D2	D1	D0

Standard 10 bit Output Data													
D9	D8	D7	D6	D5	D4	D3	D2	D1	D0	0	0	0	0

Modified 10 bit Output Data - (10 bit data + 4 bits shifted right)													
0	0	0	0	D9	D8	D7	D6	D5	D4	D3	D2	D1	D0

Figure 2.22 – Output data using 4 bits digital right shift

2.9.3 Output Format

BOBCAT camera series supports several out formats, which are based primarily on the CCD imager used in the camera, and the number of outputs available. For more information, please refer to Table 2.1.

A. Single Output Cameras

For the single output cameras (B0610, B1410 and B1610) the user has several options based on the CCD imager used. For the camera with monochrome imager the user has only one option – 1 Tap Sequential. If the camera has a color imager user can select the raw Bayer data output (1 Tap Sequential) or the interpolated color – 3 Tap RGB.

- "**1 Tap Sequential**" – In this mode all pixels (for every line) are sent to one output (Tap 1) in a sequence, starting with the first and ending with the last (L) pixel (1, 2, 3, … L-1, L) – Figure 2.23. Each pixel can be 8, 10, 12 or 14-bit deep.

Tap 1	P(1)	P(2)	...	P(L-1)	P(L)

Figure 2.23 – 1 tap sequential output

B. Dual Output Cameras

For the dual output cameras (B0620, B1620, B1920 and B2520) there are several options available, since the camera can work in a single or in a dual output mode and can have a color or monochrome imager. In a single mode (not available in B2520) operation for the camera with monochrome imager the user has only one option – 1 Tap Sequential. If the camera has a color imager and is in a single mode, user can select the raw Bayer data output (1 Tap Sequential) or the interpolated color – 3 Tap RGB. For Dual mode of operation regardless of imager type (mono or color) the user has two choices – 2 Tap Sequential or 2 Tap Interleaved. 3 Tap RGB is not available because of bandwidth limitations for Base Camera Link

- "**2 Tap Sequential**" – In this mode all pixels are sent to two outputs (Tap 1 and Tap2) in the following sequence – Figure 2.24a. Each pixel can be 8, 10 or 12-bit deep (14-bit output is not available in this mode). This feature is custom and it is not implemented in the camera, please contact IMPERX for more information.
-

  Tap 1 – starting (for every line) with the pixel 1 and then all pixels in a sequence (1, 2, 3 … M-1, M) until reaches the middle pixel (if the CCD has 1000 pixels in one line, the middle pixel M is #500.

  Tap 2 – starting (for every line) with the pixel M+1 and then all pixels in a sequence (M+1, M+2, M+3 …L-1, L) until reaches the last pixel for the line.

Tap 1	P(1)	P(2)	...	P(M-1)	P(M)
Tap 2	P(M+1)	P(M+2)	...	P(L-1)	P(L)

Figure 2.24a – 2 tap sequential output

- "**2 Tap Interleaved**" – In this mode all pixels are sent to two outputs (Tap 1 and Tap2) in the following sequence – Figure 2.24b. Each pixel can be 8, 10 or 12-bit deep (14-bit output is not available in this mode).
  Tap 1 – starting (for every line) with the pixel 1 and then all odd pixels in a sequence (1, 3 … L-3, L-1) until reaches the one before last pixel.
  Tap 2 – starting (for every line) with the pixel 2 and then all even pixels in a sequence (2, 4 …L-2, L) until reaches the last pixel for the line.

Tap 1	P(1)	P(3)	...	P(L-3)	P(L-1)
Tap 2	P(2)	P(4)	...	P(L-2)	P(L)

Figure 2.24b – 2 tap interleaved output

C. Quad Output Cameras

For the quad output cameras (B6640 and B3340) there are two options available - 2 Tap Interleaved or 4 Tap Interleaved

- "**2 Tap Interleaved**" – In this mode all pixels are sent to two outputs (Tap 1 and Tap2) with 2x clock in the following sequence – Figure 2.24c. Each pixel can be 8, 10 or 12-bit deep. This mode is available only for the normal speed.
  Tap 1 – starting (for every line) with the pixel 1 and then all odd pixels in a sequence (1, 3 … L-3, L-1) until reaches the one before last pixel.
  Tap 2 – starting (for every line) with the pixel 2 and then all even pixels in a sequence (2, 4 …L-2, L) until reaches the last pixel for the line.

Tap 1	P(1)	P(3)	...	P(L-3)	P(L-1)
Tap 2	P(2)	P(4)	...	P(L-2)	P(L)

Figure 2.24c – 2 tap interleaved output

- "**4 Tap Interleaved**" – In this mode all pixels are sent to four outputs (Tap 1, Tap2, Tap3, tap4) with 1x clock in the following sequence – Figure 2.24d. Each pixel can be 8, 10 or 12-bit deep. This mode is available for bot Normal and Overclock modes.
  Tap 1 – starting (for every line) with the pixel 1 and then all pixels in a sequence (1, 5, 9 … L-7, L-3)
  Tap 2 – starting (for every line) with the pixel 2 and then all pixels in a sequence (2, 6, 10 …L-6, L-2)
  Tap 3 – starting (for every line) with the pixel 3 and then all pixels in a sequence (3, 7, 11 … L-5, L-1)
  Tap 4 – starting (for every line) with the pixel 4 and then all pixels in a sequence (4, 8, 12 …L-4, L)

Tap1	P(1)	P(5)	…	P(L-7)	P(L-3)
Tap2	P(2)	P(6)	…	P(L-6)	P(L-2)
Tap3	P(3)	P(7)	…	P(L-5)	P(L-1)
Tap4	P(4)	P(8)	…	P(L-4)	P(L)

Figure 2.24d – 4 tap interleaved output

2.10 PULSE GENERATOR

The camera has a built-in pulse generator. The user can program the camera to generate a discrete sequence of pulse or a continuous trail – Figure 2.25. The pulse generator can be used as a trigger signal, or can be mapped to one of the outputs – refer to "I/O Control" section for more information. The discrete number of pulse can be set from 1 to 65530 with a step of 1. The user has options to set:

- **Granularity** – Indicates the number of clock cycles that are used for each increment of the width and the period. Four possible options are available (x1, x10, x100 and x 1000).
- **Period –** Indicates the amount of time (also determined by the granularity) between consecutive pulses. Minimum value is 1, maximum is 1048576
- **Width –** Specifies the amount of time (determined by the granularity) that the pulse remains at a high level before falling to a low level. Minimum value is 1, maximum is 524288

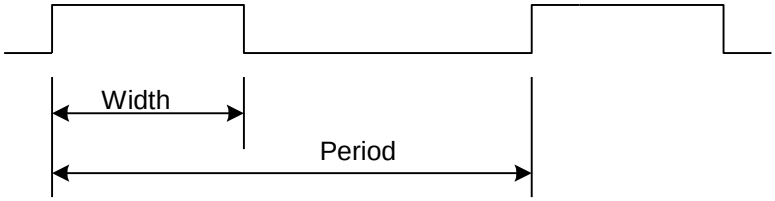

Figure 2.25 – Internal pulse generator

2.11 I/O CONTROL

2.11.1 I/O Mapping

The camera has 2 external inputs and 2 external outputs wired to the 12 pin HIROSE connector, located on the back of the camera – please refer to Table 1.4a for more information. In addition to these inputs and outputs, the cameras with camera link output have two more inputs (CC1 and CC2) and one output (CL Spare) available. The user can map camera inputs to: H or V Sync, External trigger, Computer trigger and Exposure control. The user can map the camera outputs to: Exposure Start, Exposure End, Mid-Exposure, Active Exposure Window, H or, V Sync, Odd/Even Frame Flag, Trigger Pulse, Trigger Pulse Delayed, Camera Ready, Pulse Generator, Strobe One, Strobe Two. For each mapped signal active "High", active "Low", can be selected. All possible mapping options for the camera inputs and outputs are shown in Table 2.4a and Table 2.4b respectively.

Note: CC1/CC2 is not available in GEV cameras.

Input Signals	IN1	IN2	CC1	CC2
Exposure Control	✓	✓	✓	✓
External Trigger	✓	✓	N/A	N/A
Computer Trigger	N/A	N/A	✓	✓
H-Sync	✓	✓	✓	✓
V-Sync	✓	✓	✓	✓

Table 2.4a – BOBCAT Input Mapping

Output Signals	OUT1	OUT2	CL SP
Exposure Start	✓	✓	✓
Exposure End	✓	✓	✓
Mid-Exposure	✓	✓	✓
Active Exposure Window	✓	✓	✓
H-Sync	✓	✓	✓
V-Sync	✓	✓	✓
Odd/Even Frame Flag	✓	✓	✓
Trigger Pulse	✓	✓	✓
Trigger Pulse Delayed	✓	✓	✓
Camera Ready	✓	✓	✓
Pulse Generator	✓	✓	✓
Strobe One	✓	✓	✓
Strobe Two	✓	✓	✓

Table 2.4b – BOBCAT Output Mapping

2.11.2 Electrical Connectivity

A. Inputs IN1 and IN2

The external inputs in BOBCAT (GigE or CL models) are directly connected to the camera hardware – Figure 2.26. The input signals "Signal" and "Return" are used to connect to an external Input to the outside source. The signal level (voltage difference between the inputs "Signal" and "Return") MUST be LVTTL (3.3 volts) or TTL (5.0 volts). The total maximum input current MUST NOT exceed 2.0 mA. There are no restrictions for the minimum or maximum duration.

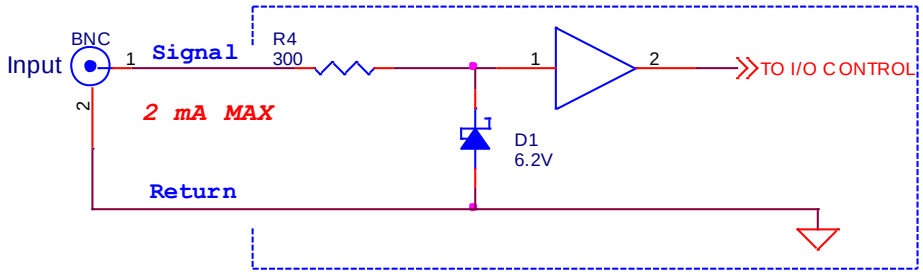

Figure 2.26 – IN1, IN2 electrical connection.

B. Outputs OUT1 and OUT2

The external outputs in BOBCAT (GigE or CL models) are directly connected to the camera hardware, and are TTL (5.0 Volts) compatible signals. The maximum output current MUST NOT exceed 8 mA. Figure 2.27 shows the output external electrical connection.

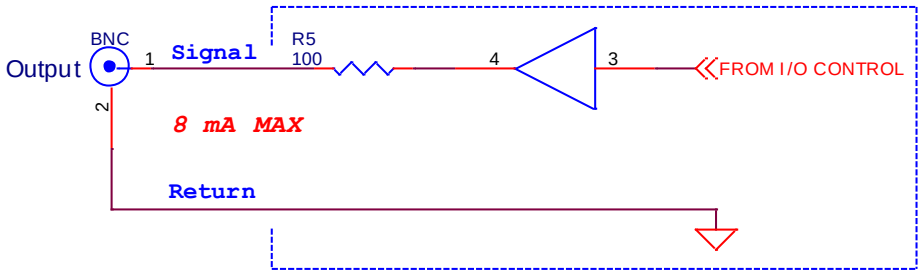

Figure 2.27 – OUT1, OUT2 electrical connection.

CAUTION NOTE

For all Bobcat cameras with Camera link output - all inputs and outputs ARE NOT optically isolated for a HW revision "RA04" or later.

C. Lens Control Output for Iris, Focus, and Zoom

The external Lens Control outputs for CLB, and GEV cameras are directly connected to the camera hardware, and operate in either 6 or 12 volts. The maximum average output current MUST NOT exceed 400 mA with all three motors operating at the same time. Figure 2.13 shows the output external electrical connection.

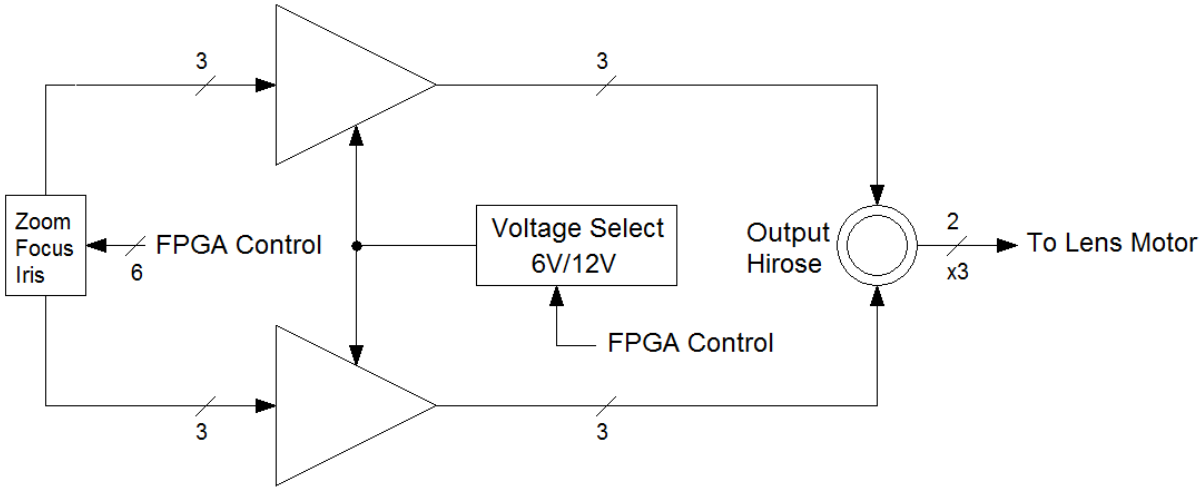

Figure 2.28 – Lens Control output electrical connection.

Note: ICL and IGV cameras do not support Lens Control. Only CLB, CLM, and GEV cameras support Lens Control.

D. Custom GPIO (IN/OUT)

BOBCAT (GigE or CL models) has a provision for a high-speed custom general purpose I/O – LVTTL (3.3 Volts) compatible. The maximum output current MUST NOT exceed 8 mA, and the maximum input current MUST NOT exceed 2.0 mA. This GPIO is not currently enabled. If your application requires such configuration please contact IMPERX for more information.

E. Custom SPI Interface

BOBCAT (CL models ONLY) has a provision for a high-speed custom SPI interface – LVTTL (3.3 Volts) compatible. The interface can be available via the mini USB connector on the back of the camera. This SPI interface is not currently enabled. If your application requires such interface please contact IMPERX for more information.

2.12 TEST IMAGE PATTERNS

2.12.1 Test Image patterns

The camera can output several test images, which can be used to verify the camera's general performance and connectivity to the frame grabber. This ensures that all the major modules in the hardware are working properly and that the connection between the frame grabber and the camera is synchronized – i.e., the image framing, output mode, communication rate, etc. are properly configured. Please note that the test image patterns do not exercise and verify the CCD's functionality.

The following test images are available:
- **Black** – displays black image (value x0000)
- **Gray** – displays a uniform dark gray image (value x2000)
- **White** – displays a uniform white image (value 3FFF)
- **H Ramp Still** – displays a stationary horizontal ramp image
- **V Ramp Still** – displays a stationary vertical ramp image
- **H Ramp Move** – displays a moving horizontal ramp image
- **V Ramp Move** – displays a moving vertical ramp image
- **Vertical Bars** – displays a set of 8 vertical gray bars with different gray levels.

2.12.2 Image Superimposition

The user has the capabilities to superimpose over a live image the following test patterns. The user can change the brightness of the superimposed image from black (invisible) to white. Image superimposition is not available during H & V binning.
- "**Crosshair**" – Crosshair watermark (2 pixels and 2 lines thickness) indicating the absolute image center of the image.
- "**H & V Lines**" – A pair of Horizontal and Vertical lines can be positioned in the image. The user can enable the lines in horizontal, vertical or both directions, and to position them at any pixel/line in the image. Since the H & V lines can be used as a measuring tool, the pixel and line positions are referenced to the CCD pixels and lines, not to the image pixels and lines. The spacing between the lines can be displayed in:
  1. **Pixels** - Natively, the spacing between the lines is shown in pixels
  2. **Metrical units** - In addition, the user can use these lines as a measuring tool. The user can apply a scale coefficient and thus, to calculate the spacing in linear measuring units (micrometers, millimeters or meters).

2.13 WHITE BALANCE AND COLOR CONVERSION

2.13.1 White Balance

The color representation in the image depends on the color temperature of the light source. Bobcat has built in algorithm to compensate for this. When white balance correction is enabled, the camera collects the luminance data for each of the primary colors R, G and B, analyzes it, and adjusts the color setting in order to preserve the original colors and make white objects to appear white. The algorithm collects data from the entire image, and can work in four different modes – "Off", "Once", "Auto" and "Manual". When set to "Off" no color correction is performed. When set to "Once" the camera analyzes only one image frame, calculates only one set correction coefficients, and all subsequent frames are corrected with this set of coefficients. When set to "Manual" the camera uses the correction coefficients as entered from the user. In "Auto" mode the camera analyzes every frame, a set of correction coefficients are derived for each frame and applied to the next frame. All Bobcat color cameras support white balance feature.

2.13.2 Color (Bayer to RGB) Conversion

All single tap only Bobcat cameras support Bayer to RGB interpolation algorithm. The color interpolation is based on (5 x 5) algorithm with approximation in order to achieve a good and pure color representation. The algorithm also allows for individual control of the gain and offset of the primary R G B colors. The camera also can output raw pixel data - user has an option to set the mode.

The cameras supporting the internal Bayer to RGB interpolations are B0610, B1310, B1410, B1411 and B1610.

2.14 DYNAMIC BLACK LEVEL CORRECTION AND TAP BALANCING

2.14.1 Black Level Correction

As was described in the Gain and Offset section, the reference black level on each CCD output fluctuates around 0V. The AFE offset correction works on the entire image and if there are noise fluctuations on a line level, the AFE is not capable of correcting them. The camera has a built in dynamic signal-to-noise correction feature to compensate for this effect. In the beginning of each line the CCD has several back (masked) columns. The dark level for each tap is sampled over several of these masked pixels and the average per tap black level floor is calculated for each frame. The average floor level for each tap is then subtracted from each incoming pixel (from the corresponding tap) from the next frame.

2.14.2 Tap Balancing

Since the camera has two separate video outputs coming out of the CCD, there is always some offset misbalance between the video outputs. Thus, changing the AFE gain leads to a change in the offset level and to a further misbalance between the two video signals. To correct the balance between two signals at any particular gain, BOBCAT series of cameras have static and dynamic balancing algorithms implemented in the firmware. The algorithms compare the black and bright levels of the adjacent pixels around the tap line, and adjusts the gain and offset for each tap accordingly, until the balance has been reached. The selection to use static or dynamic balancing depends on the application. Please note, that if AGC is enabled, it is strongly recommended to use static balancing, because the dynamic balancing can interfere with the AGC algorithm.

2.15 TRANSFER FUNCTION CORRECTION – USER LUT

The user defined LUT (Lookup Table) feature allows the user to modify and transform the original video data into any arbitrary value – Figure 2.30. Any 12-bit value can be transformed into any other 12-bit value. The camera supports two separate lookup tables, each consisting of 4096 entries, with each entry being 12 bits wide. The LUT is applied to the entire image unless AOI8 is enabled as "LUT ROI". In this case the LUT function will apply only to the selected ROI. The first LUT is factory programmed with a standard Gamma 0.45. The second LUT is not pre-programmed in the factory. Both LUT's are available for modifications, and the user can generate and upload his own custom LUT using the BOBCAT Configuration software – refer to Appendix B.



Figure 2.30 – Look up table

2.15.1 Standard Gamma Correction

The image generated by the camera is normally viewed on a CRT (or LCD) display, which does not have a linear transfer function – i.e., the display brightness is not linearly proportional to the scene brightness (as captured by the camera). As the object brightness is lowered, the brightness of the display correspondingly lowers. At a certain brightness level, the scene brightness decrease does not lead to a corresponding display brightness decrease. The same is valid if the brightness is increased. This is because the display has a nonlinear transfer function and a brightness dynamic range much lower than the camera. The camera has a built-in transfer function to compensate for this non-linearity, which is called gamma correction. If enabled, the video signal is transformed by a non-linear function close to the square root function (0.45 power) – formula 2.4. In the digital domain, this is a nonlinear conversion from 12-bit to 12-bit – Figure 2.31.

$$\text{Output signal [V]} = (\text{input signal [V]})^{0.45} \qquad (2.4)$$

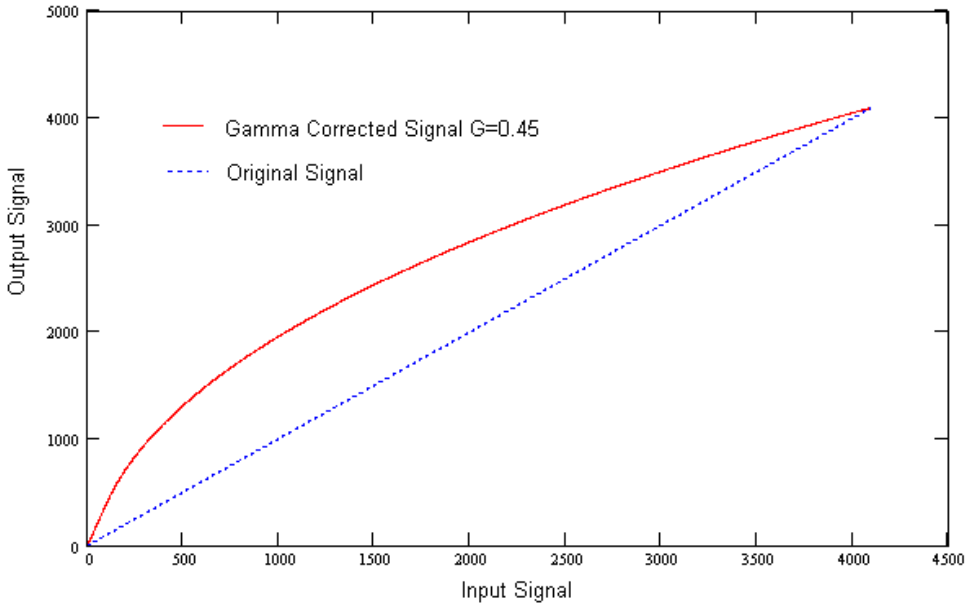

Figure 2.31 – Gamma corrected video signal

2.15.2 User Defined LUT

The user can define any 12-bit to 12-bit transformation as a user LUT and can upload it to the camera using the configuration utility software. The user can specify a transfer function of their choice to match the camera's dynamic range to the scene's dynamic range. There are no limitations to the profile of the function. The LUT must include all possible input values (0 to 4095) – Figures 2.32.

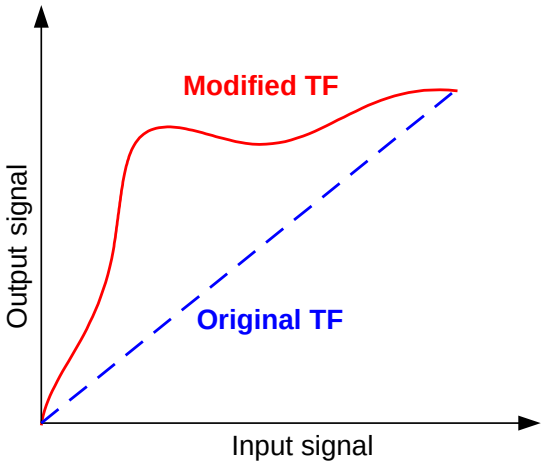

Figure 2.32 – Custom LUT

2.16 DEFECTIVE PIXEL CORRECTION

A CCD imager is composed of a two-dimensional array of light sensitive pixels. In general, the majority of the pixels have similar sensitivity. Unfortunately, there are some pixels which sensitivity deviates from the average pixel sensitivity. A defective pixel is defined as a pixel whose response deviates by more than 15% from the average response. In extreme cases, these pixels can be stuck 'black' or stuck 'white' and are non-responsive to light. There are two major types of pixel defects – "Defective" and "Hot".

1. "**Defective**" – these are pixels which sensitivity deviates more than 15% due to fluctuations in the CCD manufacturing process. Two types of defective pixels are possible:
   a. "**DARK**" is defined as a pixel, whose sensitivity is lower than the sensitivity of the adjacent pixels. In some cases, this pixel will have no response (completely dark).
   b. "**BRIGHT**" is defined as a pixel, whose sensitivity is higher than the sensitivity of the adjacent pixels. In some cases, this pixel will have full response (completely bright).
2. "**Hot**" – these are pixel, which in normal camera operation behaves as normal pixel (the sensitivity is equal to the one of the adjacent pixels), but during long time integration behaves as a high intensity bright pixel. In some cases, this pixel will have full response (completely bright).

2.16.1 Static Pixel Correction

Static Defective and Hot pixel correction works with predetermined and preloaded Defective and Hot pixel maps. During factory final testing, our manufacturing engineers run a program specially designed to identify these 'defective' and "hot" pixels. The program creates a map file which lists the coordinates (i.e. row and column) of every defective pixel. This file, called the Defect Pixel Map, is then downloaded into the camera's non-volatile memory. Users may wish, however, to create and to upload their own DPM file because of the uniqueness of their operating environment or camera use. When 'Defective Pixel Correction' is enabled, the camera will compare each pixel's coordinates with entries in the 'defect' map. If a match is found, then the camera will 'correct' the defective pixel. When 'Hot Pixel Correction' is enabled, the camera will compare each pixel's coordinates with entries in the 'defect' map. If a match is found, then the camera will 'correct' the hot pixel. The "Defective/Hot Pixel Map" can be displayed upon user request.

2.16.1 Dynamic Pixel Correction

Dynamic pixel correction works without preloaded pixel maps. When this option is enabled, the camera determines which pixel needs correction and performs the correction automatically. Static and Dynamic "Defective Pixel Correction" and "Hot Pixel Correction" can be enabled independently or simultaneously.

2.17 FLAT FIELD CORRECTION

A CCD imager is composed of a two-dimensional array of light sensitive pixels. Each pixel within the array, however, has its own unique light sensitivity characteristics. Most of the deviation is due to the difference in the angle of incidence and to charge transport artifacts. This artifact is called 'Shading' and in normal camera operation should be removed. The process by which a CCD camera is calibrated for shading is known as 'Flat Field Correction'. Refer to Figures 2.33a and 2.33b for images acquired before and after Flat Field Correction. This feature is available as a standard feature only for cameras with 1.0" optical format or bigger.

The BOBCAT series of cameras incorporate a Flat Field Correction mechanism. The Flat Field Correction mechanism measures the response of each pixel in the CCD array to illumination and is used to correct for any variation in illumination over the field of the array. The optical system most likely introduces some variation in the illumination pattern over the field of the array. The flat field correction process compensates for uneven illumination, if that illumination is a stable characteristic of each object exposure.

During factory final testing, our manufacturing engineers run a program specially designed to identify the shading characteristics of the camera. The program creates a Flat Field Correction file, which contains coefficients describing these shading characteristics. This file is then downloaded into the camera's non-volatile memory. When Flat Field Correction is enabled, the camera will use the Flat Field Correction coefficients to compensate for the shading effect.

Each IMPERX camera is shipped with the Flat Field Correction file that was created for that camera during factory final testing. Users may wish, however, to create their own Flat Field Correction file because of the uniqueness of their operating environment (i.e. lens, F-stop, lighting, etc.). Therefore, IMPERX provides a Flat Field Correction utility that allows users to generate a Flat Field Correction file. This file can then be downloaded into the camera. While creating the Flat Field Correction file, it is necessary to illuminate the CCD with a light pattern that is as representative of the background illumination as possible. This illumination should be bright enough, or the exposure made long enough, so that the CCD pixels signals are at least 25 percent of full scale (for 12-bit mode the level should be at least 1000 ADUs).



Figure 2.33a – Original image showing 'shading' effect



Figure 2.33b – Flat field corrected image

2.18 NEGATIVE IMAGE

When operating in the negative image mode, the value of each pixel is inverted. The resultant image appears negative – Figure 2.34. This feature could be useful if the camera receives a negative image (i.e. image from microfilms, prints or slides). In this mode, the image has a normal vertical and horizontal orientation and full resolution. This feature is available in both single and dual output modes.

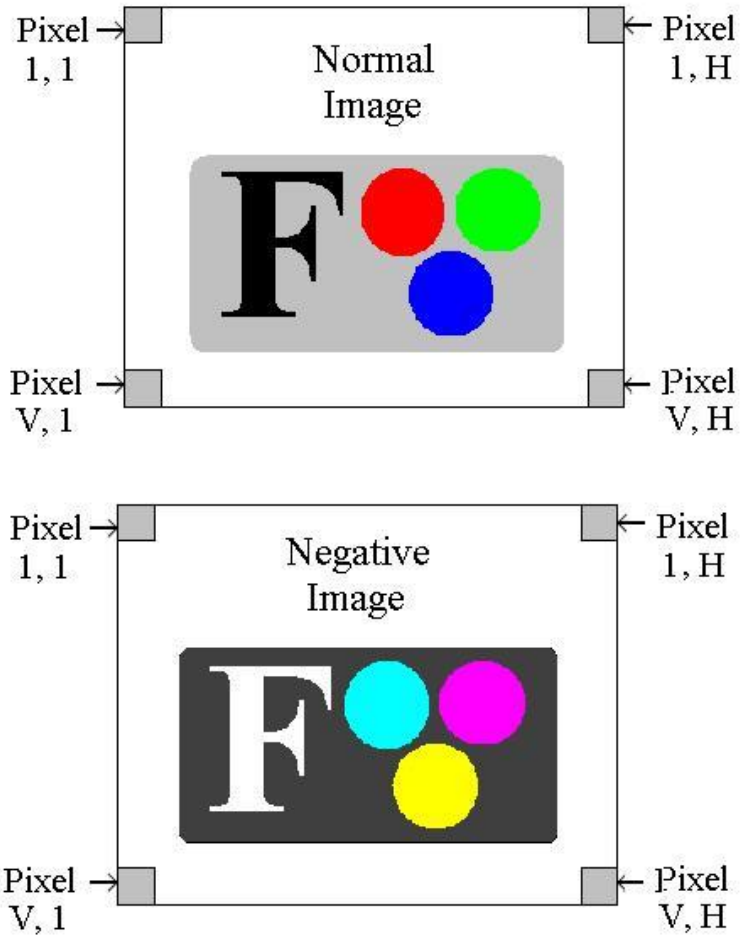

Figure 2.34 – Normal and Negative Image

2.19 CAMERA INTERFACE

2.19.1 Status LED

The camera has a dual red-green LED, located on the back panel. The LED color and light pattern indicate the camera status and mode of operation:

- **GREEN is steady ON** – Normal operation. The user is expected to see a normal image coming out of the camera.
- **GREEN blinks with frequency ~ 0.5 Hz** – indicates triggering mode.
- **GREEN blinks with frequency ~ 2.0 Hz** – indicates programmable integration (line, frame or both) mode.
- **YELLOW is steady ON** – Test mode. The user is expected to see one of the test patterns.
- **YELLOW blinks with frequency ~ 0.5 Hz** – the camera is in AGC/AEC mode. In this mode changing the shutter slider will not affect the image luminance.
- **YELLOW blinks with frequency ~ 2.0 Hz** – the camera is in external H or V sync mode. The camera timing will be slaved to the external pulses. Changing programmable integration sliders will not affect the image luminance
- **RED is steady ON** – RS232 communication error or firmware load error. Re-power the camera and load the factory settings. If the condition is still present, please contact the factory for RMA.
- **LED is OFF** – Power not present error. The camera has no power or indicates a camera power supply failure. A faulty external AC adapter could also cause this. To restore the camera operation, re-power the camera and load the factory settings. If the LED is still "OFF", please contact the factory for RMA.

2.19.2 Temperature Monitor

The camera has a built-in temperature sensor which monitors the internal camera temperature. The sensor is placed on the hottest spot in the camera. The internal camera temperature is displayed on the Camera Configuration Utility screen and can be queried by the user at any time – refer to Camera Configuration section.

2.19.3 Exposure Time Monitor

The camera has a built-in exposure time monitor. In any mode of operation (i.e. normal, AOI, binning, etc.) the user can query the camera for the current exposure time by issuing

a command – refer to the Exposure Control section. The current camera integration time in units of microseconds will be returned.

2.19.4 Frame Time Monitor

The camera has a built-in frame rate monitor. In any mode of operation (i.e. normal, AOI, binning, etc.) the user can query the camera for the current frame rate by issuing a command – refer to the Exposure Control section. The current camera speed in units of frames per second will be returned.

2.19.5 Current image size

The camera image size can change based on a camera feature selected. In any mode of operation (i.e. normal, AOI, binning, etc.) the user can query the camera for the current image size by issuing a command – refer to the Image Size section. The current camera image size in (pixels x lines) will be returned.

2.20 LENS CONTROLLER

The camera has a built in Lens Controller that outputs Zoom, Focus, and Iris control signals for a standard Type 1 (6V) or Type (12V) C-Mount motorized lens. Output Lens Control signals are controlled via the Bobcat CamConfig GUI, or command terminal. For camera connectivity please refer to Section 1.4.3. For Lens Control GUI operating instructions, refer to section 5.7.12, and for command terminal register values please refer to section A.16.

Note: ICL, and IGV cameras do not support Lens Control. Only CLB, CLM, and GEV cameras support Lens Control.



Digital Image Processing

Implementation and use of built in digital image processing algorithms

3.1 OVERVIEW

The camera has built-in several basic image processing functions. More functions will be added later. Please contact IMPERX for more information.

3.2 IMAGE ENHANCEMENT

In many imaging applications the user will have a dark object on a bright background, many dark and bright spots or shadows, or the light will not be sufficient, so the resulting image will have a low contrast, and/or a very low dynamic range. To improve the image quality in such conditions, BOBCAT offers a set of image-enhancing features – thresholding and multi-point image correction. The processing function is applied to the entire image unless AOI8 is enabled as "Processing ROI". In this case the processing function will apply only to the selected ROI.

3.2.1 Threshold Operation

In many applications, the binary images are much simpler to analyze that the original gray scale one. The process, which converts the regular gray scale image to binary, is called "Thresholding". Thresholding is a special case of intensity quantization (binarization) where the image can be segmented into foreground and background regions, having only two gray scale levels "white" and "black". Selecting the threshold value is very critical for the binary image quality, and it is to a great extend scene dependent. If a threshold level is chosen correctly, this will produce a well-defined boundary of the object, which is essential. In some cases, it is desirable if part of the image is binary and some is grayscale image. The camera has built in four thresholding modes:

3.2.1.1 Single Threshold Binary

If the image is a high contrast scene and has well defined bright and dark regions a simple binarization technique can be used for thresholding – Formula 3.1. The binary image output is converted to "white" for all gray level values higher or equal to the selected threshold point X1, and to "black" for all gray levels lower than X1. The user can set the optimal threshold value. Figure 3.1 shows the original and the processed image with single threshold.

Output signal => "WHITE" if (input signal ≥ X1)
"BLACK" if (input signal < X1) (3.1)

3.2.1.2 Dual Threshold Binary

If the image has a low contrast and does not have well defined dark and bright regions, the simple threshold operation does not yield good results. In such cases a

dual (known also as interval or window) thresholding technique has to be implemented – Formula 3.2. The binary image output is converted to "white" for all gray level values between the selected threshold interval X1 and X2, and to "black" for all gray levels outside (X1, X2) interval. The user can set the optimum X1 (Low) and X2 (High) threshold values, please note that X2 > X1. Figure 3.2 shows the original a processed image after a dual threshold operation.

Output signal => "BLACK" if (input signal ≤ X1)
"WHITE" if (X1 < input signal < X2)
"BLACK" if (input signal ≥ X2) (3.2)

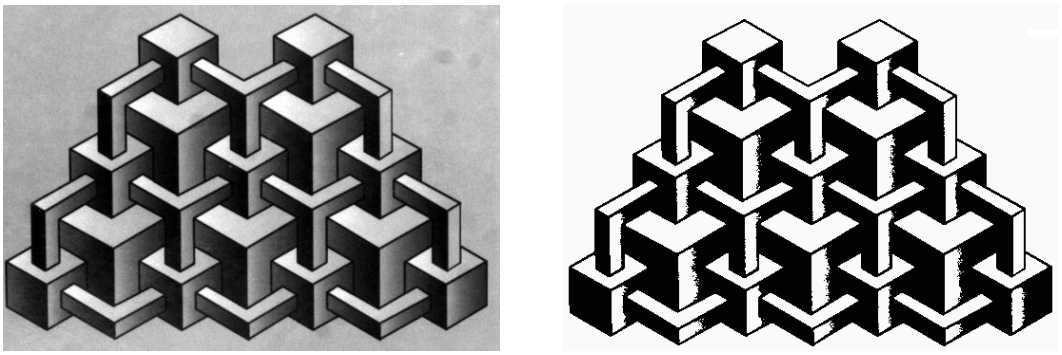

Figure 3.1 – Original and processed image with single threshold.

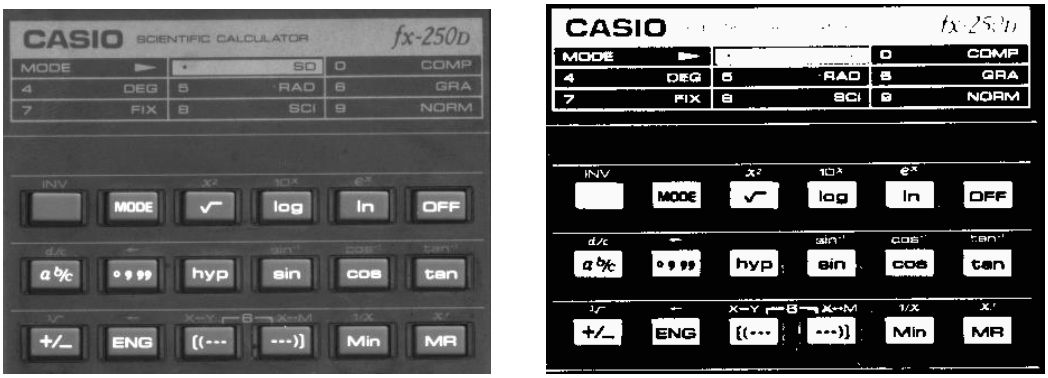

Figure 3.2 – Original and processed image with double threshold.

3.2.1.3 Dual Threshold with Gray Scale

In some low contrast imaging applications, the simple threshold operation along with a superimposed gray scale image might yield a good result. In such cases a dual thresholding technique with a gray scale has to be implemented – Formula

3.3. The image output is a gray scale image for all gray level values between the selected threshold interval X1 and X2, "black" for all gray levels lower than X1, and "white" for any gray levels higher than X2. The user can set the optimum X1 (Low) and X2 (High) threshold values, please note that X2 > X1. The image gray scale range is only from values X1 to X2.

$$\text{Output signal} \Rightarrow \begin{cases} \text{"BLACK"} & \text{if (input signal} \le X1) \\ \text{"Gray Scale"} & \text{if } (X1 < \text{input signal} < X2) \\ \text{"WHITE"} & \text{if (input signal} \ge X2) \end{cases} \quad (3.3)$$

3.2.1.4 Dual Threshold with Gray Scale Stretch

In some low contrast applications, the threshold operation along with a gray scale stretch might yield a good result – Figure 3.3. This is similar to dual threshold with a gray scale, but the image gray scale is digitally stretched to full 12-bit gray scale – Formula 3.4. The user can set the optimum X1 (Low) and X2 (High) threshold values, note that X2 > X1.

$$\text{Output signal} \Rightarrow \begin{cases} \text{"BLACK"} & \text{if (input signal} \le X1) \\ \text{"Full Gray Scale"} & \text{if } (X1 < \text{input signal} < X2) \\ \text{"WHITE"} & \text{if (input signal} \ge X2) \end{cases} \quad (3.4)$$



Figure 3.3 – Original and processed image with threshold and gray scale stretch.

3.2.2 Multi Point Correction

Multi point correction is a modification of the slope of the camera transfer function (TF), which results in the suppression or enhancement of certain image regions. The original camera transfer function is linear and maps the data 1:1. The new (corrected) transfer function has one or two sets of variables (X, Y) and based on the relation between the variables a correction of certain image regions can be achieved. The camera has two built in correction modes.

3.2.2.1 Single Point Correction

The simplest image enhancement can be achieved by a linear modification of the original transfer function. If the image brightness is weighted towards a particular region (dark or bright), this region needs to be suppressed, and the less present (the flat) region needs to be enhanced. The range of the correction is determined by the location of the break point (X1, Y1) – Figure 3.4. This point (X1, Y1) divides the camera transfer function into two regions (two lines). The slope of these lines (the angle between the X axis and the line) determines the power of the correction. If the angle is less than 45° degrees, the grayscale range will be suppressed. If the angle is more than 45° degrees, the grayscale range will be enhanced. The user can set the optimum (X1, Y1) values.

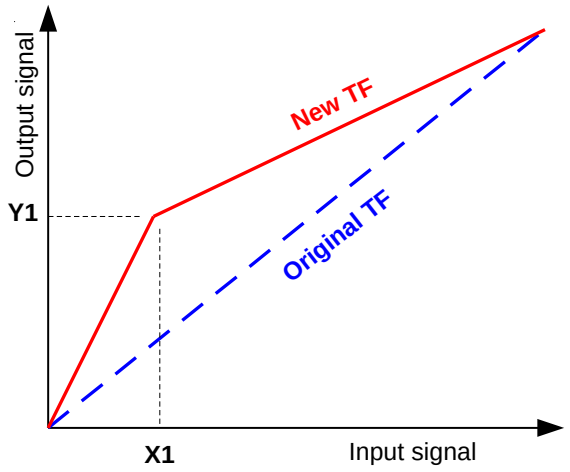

Figure 3.4 – Single point TF correction.

3.2.2.2 Multi Point Correction

If the image brightness is weighted towards two particular regions – dark and bright, and in the same time mid region has a low dynamic range a multi-point correction will produce much better results compare to the single point correction. The range of the correction is determined by the location of a pair of the break point (X1, Y1) and (X2, Y2) – Figure 3.5a. The camera transfer function is divided into three regions (three lines), which allows multiple grayscale regions to be corrected independent of each other. If the angle is less than 45° degrees, the grayscale range will be suppressed, if the angle is 45° degrees, the gray scale will not change. If the angle is more than 45° degrees, the grayscale range will be enhanced. The user can set the optimum (X1, Y1) and (X2, Y2) values, note that X2 > X1. Figure 3.5b shows some of the most typical correction curves. If the angle in the mid-range (between X1 and X2) is negative, the grayscale range will be reversed. Curve TF 1 enhances the dark image regions and suppresses the bright

ones. TF 2 – suppresses the dark and bright image parts and enhances the mid-range. TF 3 – enhances the bright image regions and suppresses the dark ones. TF 4 – enhances the bright and dark image parts and suppresses the mid-range.

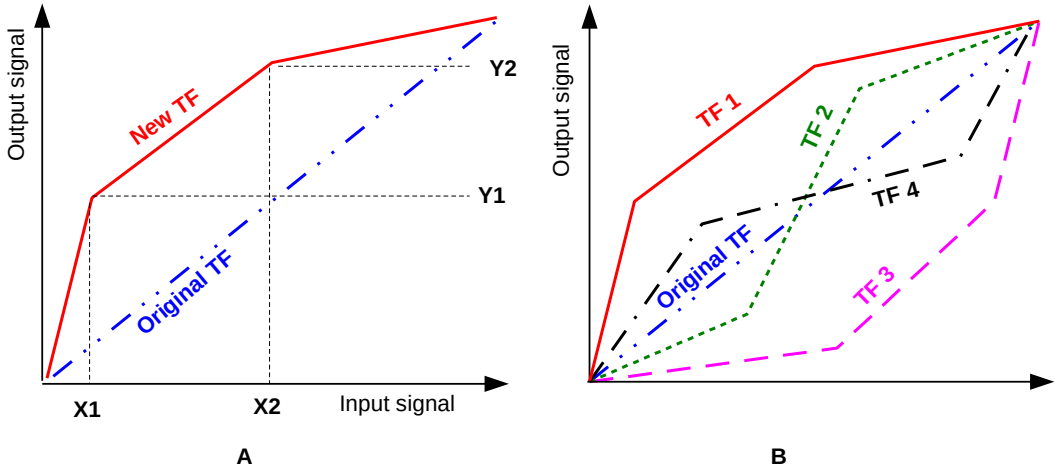

Figure 3.5 – Multi point TF correction.

Figure 3.6 shows an original image (left) and processed one (right). The original image has two dominant regions – predominantly dark subject with a very bright bottom section and a relatively flat gray region. To correct the image, we will use "TF 1" type correction with points (650, 1950) and (2200,1760).

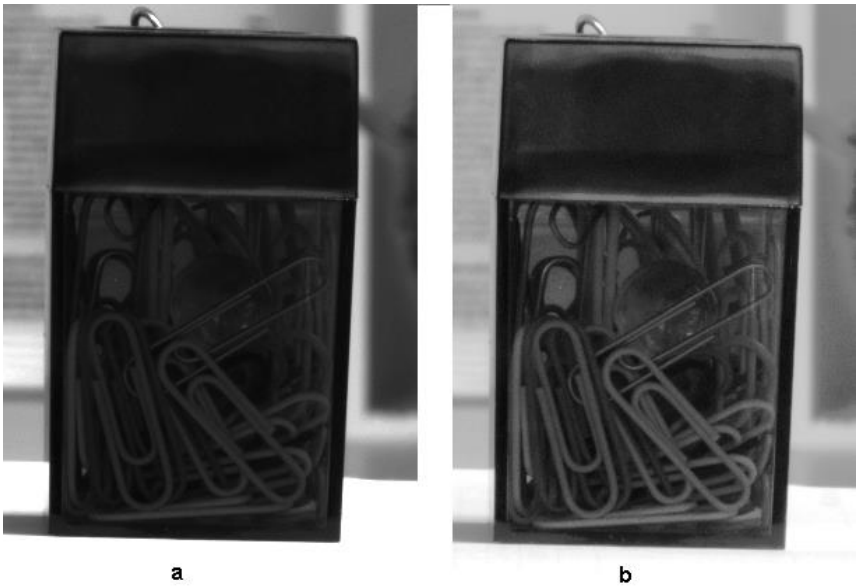

Figure 3.6 – Multi point image correction (a – original, b – processed).

CAUTION NOTE

Due to space limitations in the camera FPGA, the "Image processing" module is disabled for the color Bobcat cameras. For more information please contact IMPERX.

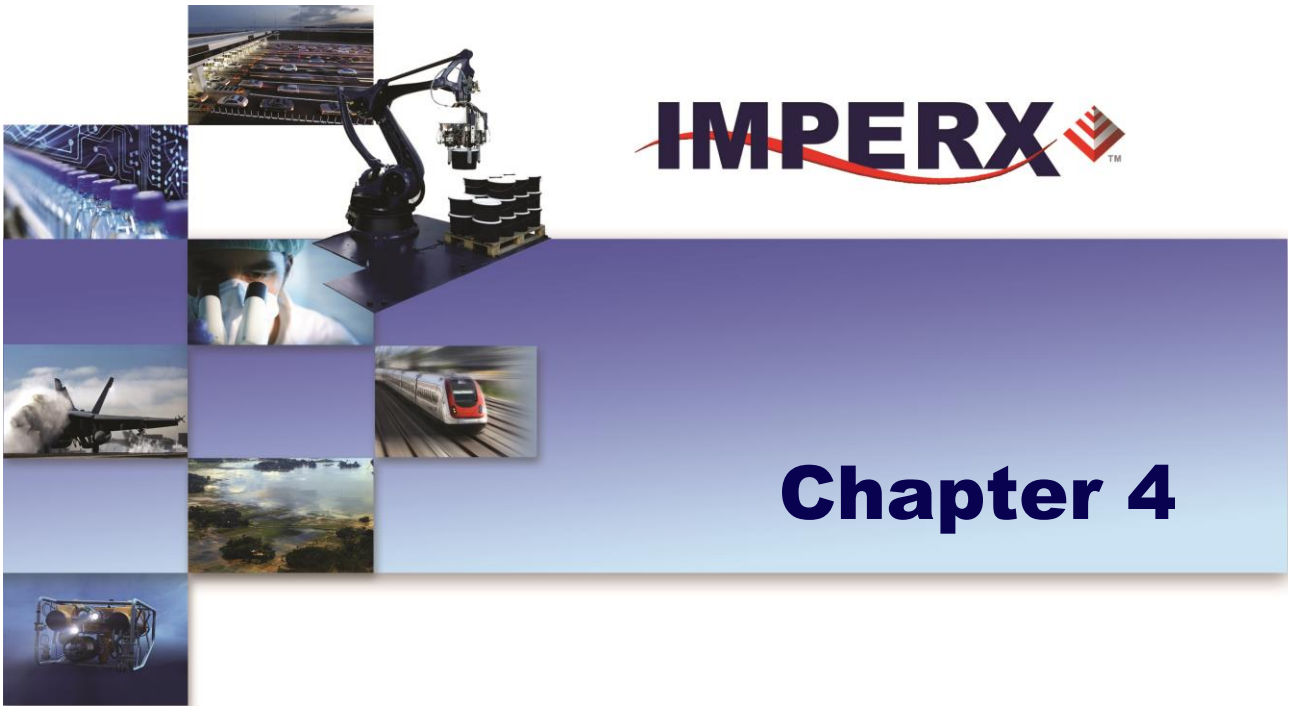

Camera Configuration

How to communicate with the camera and configure it's operating parameters

IMPERX
6421 Congress Ave.
Boca Raton, FL 33487
+1 (561) 989-0006

Rev. 2.1.1
9/26/2017
www.imperx.com

4.1 OVERVIEW

The Bobcat series of cameras are highly programmable and flexible. All of the cameras resources (internal registers, video amplifiers and parameter FLASH) can be controlled by the user. The user communicates with the camera using a simple, register-based, command protocol via the Camera Link's serial interface. The interface is bi-directional with the user issuing 'commands' to the camera and the camera issuing 'responses' (either status or info) to the user. The entire camera registers and resources can be configured and monitored by the user. The camera's parameters can be programmed using the Bobcat Configurator graphical user interface.

4.2 CAMERA CONFIGURATION

4.2.1 Configuration Memory – parameter FLASH

The camera has a built-in configuration memory divided into 4 segments: 'work-space', 'factory-space', 'user-space #1' and 'user-space #2'. The 'work-space' segment contains the current camera settings while the camera is powered-up and operational. All camera registers are located in this space. These registers can be programmed and retrieved via commands issued by the user. The workspace is RAM based and upon power down all camera registers are cleared. The 'factory-space' segment is ROM based, write protected and contains the default camera settings. This space is available for read operations only. The 'user-space #1' and 'user-space #2' are non-volatile, FLASH based and used to store two user defined configurations. Upon power up, the camera firmware loads the work-space registers from the factory-space, user-space #1 or user-space #2 as determined by a 'boot control' register located in the configuration memory. The 'boot control' register can be programmed by the user (refer to Camera Configuration Section). The user can, at any time, instruct the camera to loads its workspace with the contents of the 'factory-space', 'user-space #1' or 'user-space #2'. Similarly, the user can instruct the camera to save the current workspace settings into either the 'user-space #1' or 'user-space #2'.

The non-volatile parameter FLASH memory also contains Defective Pixel Map, Hot Pixel Map, Flat Field Correction Coefficients, LUT 1 and LUT 2, which can be loaded to the camera internal memory upon enabling the corresponding camera feature. The user can create its own DPM, HPM, FFCC, and LUT tables and upload them to the parameter FLASH using the Bobcat Configurator graphical user interface.

4.2.3 Camera Serial Protocol

In order to access the camera registers and resources a sequence of bytes needs to be transmitted to the camera via the Camera Link serial interface. This is an RS232, asynchronous, full-duplex, serial protocol, with 1 start bit, 8 data bits, 1 stop bit, no hand shake, and no parity – Figure 3.1. The default baud rate is configurable (9600, 19200, 38400, 57600 and 115200 – default).

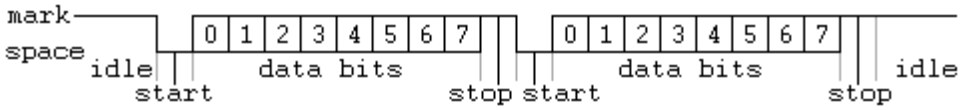

Figure 4.1 – Serial protocol format

Each camera control register can be updated independently. In terms of the serial protocol, all registers are defined as 16-bit address (hex format), and 32-bit data (hex format). Camera registers using less than 32-bits in width must be padded with '0's on writes, and unused bits are ignored on reads. Register data is always "packed low" within 32-bit data words for registers defined less than 32-bits.

There is a latency delay for each command due to command execution and data transmission over the serial port. This latency varies from command to command because of resource location and command response length.

4.2.3.1 Write Operation

In order to write to any given camera register, a sequence of 7 bytes should be sent to the camera. If there is no error the camera returns one byte acknowledge for the write command <Ack> - Figure 3.2. If there is an error, the camera returns two bytes not-acknowledge for the write command – the first byte is <Nac> <Err>, the second is the error code – Figure 3.3a,b:

Write to camera (7 Bytes): <Write_Cmd> <Address> <Data>

1st byte: 0x57 (Write Command)
2nd byte: <Register Address_High> MSB
3rd byte: <Register Address_Low> LSB
4th byte: <Register Data Byte 4> MSB
5th byte: <Register Data Byte 3> …
6th byte: <Register Data Byte 2> …
7th byte: <Register Data Byte 1> LSB

Write Acknowledge (1 Byte): <Ack>

1st byte: 0x06 (Acknowledge)

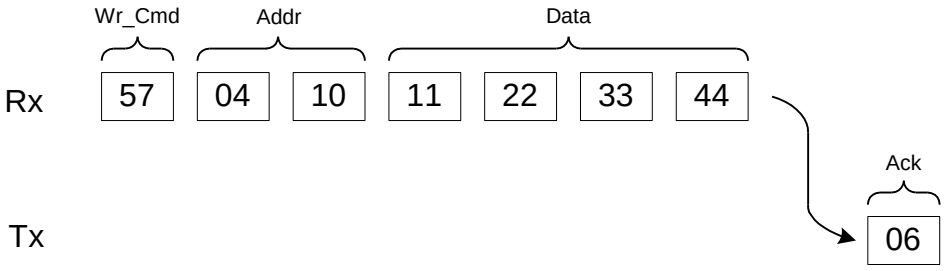

Figure 4.2 – Normal write cycle

Write Not-acknowledge (2 Bytes): <Nak> <Error Code>

1st byte: 0x15 (Not-acknowledge)
2nd byte: <XX> (Nck Error Code. See Error Code Description section)

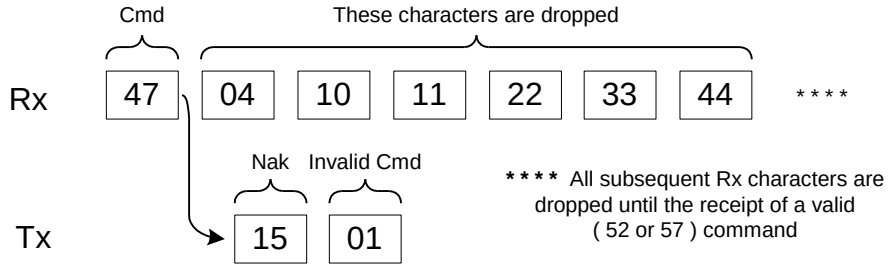

Figure 4.3a – Invalid command error

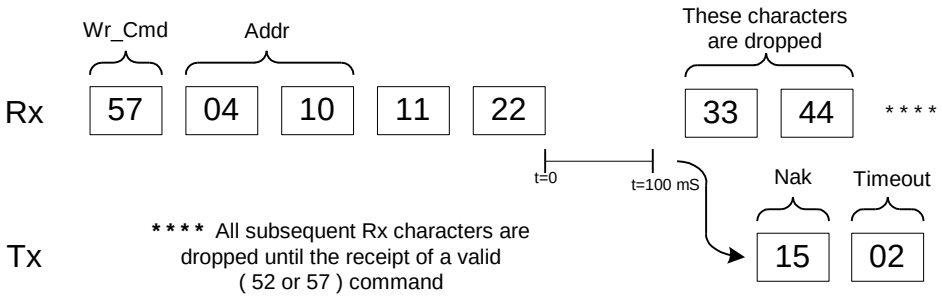

Figure 4.3b – Rx timeout error

Example: Write to register address 0x0410, data value = 0x11223344:

⇨ Camera Write Command: **<0x57> <04> <10> <11> <22> <33> <44>**

4.2.3.2 Read Operation

In order to read from any given camera register, a sequence of 3 bytes should be sent to the camera. If there is no error, the camera returns 5 bytes – a one-byte acknowledge for the read command <Ack> and four bytes of data <DD> <DD> <DD> <DD> - Figure 3.4. During read operation the camera does not return an error or <Nac>. The only exception is the case of invalid command –Figure 3.3a. If the user specifies a wrong address, the camera returns acknowledge <06> and four bytes of data **<00> <00> <00> <00>.**

Read from camera (3 Bytes): <Read_Cmd> <Address>

1st byte: 0x52 (Read Command)
2nd byte: <Register Address_High> MSB
3rd byte: <Register Address_Low> LSB

The camera returns (5 bytes) : <ACK> <Data>

1st byte: 0x06 (Acknowledge)
2nd byte: <Register Data Byte 4> MSB
3rd byte: <Register Data Byte 3> …
5th byte: <Register Data Byte 2> …
6th byte: <Register Data Byte 1> LSB

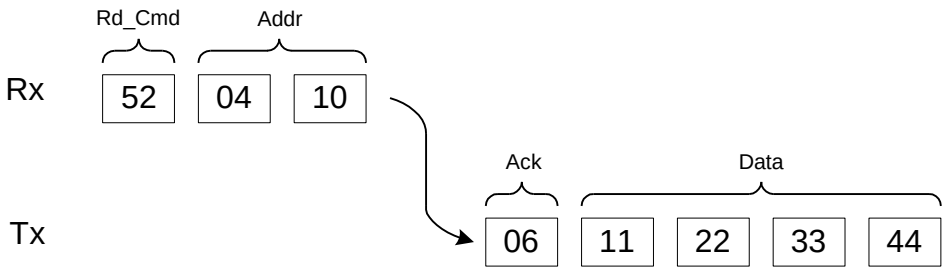

Figure 4.4 – Normal read cycle

Example: Read from camera register address 0x0410:

⇨ Camera Read Command: **<0x52> <04> <10>**

Camera returns register data payload value 0x11223344:

⇨ Register data <**0x06**> <**11**> <**22**> <**33**> <**44**>

4.2.3.3 Error Code Description

To manage camera reliability, not-acknowledge error codes are defined as follows:

x00 – No error
x01 – Invalid command. An invalid command (not 52 or 57) has been sent to the camera.
x02 – Time-out.
x03 – Checksum error
x04 – Value less then minimum
x05 – Value higher than maximum
x06 – AGC error
x07 – Supervisor mode error
x08 – Mode not supported error

4.3 CAMERA CONFIGURATION REGISTER DESCRIPTION

4.3.1 Startup Procedure

Upon power on or receipt of a `'SW_Reset'` command, the camera performs the following steps:

1. Boot loader checks Program FLASH memory for a valid Firmware image and loads it into the FPGA.
2. The camera reads the 'Boot From' register from the parameter FLASH and loads its workspace from one of the configuration spaces as determined by the 'Boot From' data. The available configuration spaces are: `'Factory…'`, `'User #1…'`, `'User #2…'`
3. The camera is initialized and ready to accept user commands.

4.3.2 Saving and Restoring Settings

Operational settings for the camera may be stored for later retrieval in its non-volatile memory. Three separate configuration spaces exist for storing these settings: 'factory' space, 'user #1' space and 'user #2' space. The factory space is pre-programmed by factory personnel during the manufacturing process. This space is write protected and cannot be altered by the user. Two user spaces are also provided allowing the user to store his/her own preferences. The camera can be commanded to load its internal workspace, from either of the three configuration spaces, at any time. The user can also define from which space the camera should automatically load itself following a power cycle or receipt of a reset (`'SW_Reset'`) command.

4.3.2.1 Boot From

This register determines which configuration space (factory, user#1 or user #2) should be loaded into the camera following a power cycle or reset (`'SW_Reset'`) command. Upon a power cycle or reset, the camera reads the 'boot from' value from non-volatile memory and loads the appropriate configuration space.

Address	:	0x6000
Data (1- 0)	:	00 – Boot from Factory
		01 – Boot from User #1
	:	10 – Boot from User #2
Data (31- 2)	:	N/A

4.3.2.2 Load From Factory

The 'Load From Factory' command instructs the camera to load its workspace from the factory space. All current workspace settings will be replaced with the contents of the factory space. This is a command, not a register. The act of writing to this location initiates the load from the factory.

Address : 0x6060

4.3.2.3 Load From User #1

The 'Load From User #1' command instructs the camera to load its workspace from the user #1 space. All current workspace settings will be replaced with the contents of the user #1 space. This is a command, not a register. The act of writing to this location initiates the load from the user #1.

Address : 0x6064

4.3.2.4 Load From User #2

The 'Load From User #2' command instructs the camera to load its workspace from the user #2 space. All current workspace settings will be replaced with the contents of the user #2 space. This is a command, not a register. The act of writing to this location initiates the load from the user #2.

Address : 0x6068

4.3.2.5 Load MFG Default Gain

The 'Load MFG Default Gain' command instructs the camera to load its default gain and offset settings from the manufacturing space. Different settings will be loaded for "slow" and "fast" camera speed. This is a command, not a register. The act of writing to this location initiates the load the default gain and offset settings.

Address : 0x606C

4.3.2.6 Save to User #1

The 'Save To User #1' command instructs the camera to save its workspace to the user #1 space. All current workspace settings will be saved to the user #1 space. This is a command, not a register. The act of writing to this location initiates the save to user #1 space.

Address : 0x6074

4.3.2.7 Save to User #2

The 'Save To User #2' command instructs the camera to save its workspace to the user #2 space. All current workspace settings will be saved to the user #2 space. This is a command, not a register. The act of writing to this location initiates the save to user #2 space.

Address : 0x6078

4.3.2.8 SW_Reset

The 'SW_Reset' command instructs the camera to initiate software reset, which resets the camera and loads its workspace from one of the configuration spaces as determined by the 'Boot From' data. Although, this is a command, the user MUST write a specific data 0xDEADBEEF in order to initiate the reset sequence.

Address : 0x601C

Data : 0xDEADBEEF

4.3.2.9 BAUD Rate Selector

This register sets the communication baud rate between the camera and computer.

Address : 0x0604
Data (2:0) : 000 – 9600
001 – 19200
010 – 38400
011 – 57600
100 – 115200 (default)
Data (31:3) : N/A

4.3.3 Retrieving Manufacturing Data

The camera contains non-volatile memory that stores manufacturing related information. This information is programmed in the factory during the manufacturing process.

4.3.3.1 Firmware Revision

This register returns the camera main firmware revision.

Address : 0x6004
Data (31:28) : <FW image>
Data (27:24) : <CCD Type>
Data (23:0) : <FW revision>

4.3.3.2 Firmware Build Number

This register returns the firmware build number, which tracks custom firmware for specific applications.

Address : 0x6008
Data : <FBN revision>

4.3.3.3 Assembly Part Number

This register returns the camera assembly part number – the complete assembly part number is 4 registers.

Address : 0x7004, 0x7008, 0x700C, 0x7010
Data : <Assembly Part Number>

4.3.3.4 Camera Serial Number

This register returns the camera serial number – the complete serial number is 2 registers.

Address : 0x7014, 0x7018
Data : <Camera Serial Number>

4.3.3.5 CCD Serial Number

This register returns the CCD imager number – the complete CCD number is 2 registers.

Address : 0x701C, 0x7020
Data : <CCD Serial Number>

4.3.3.6 Date of Manufacture

This register returns the camera date of manufacture – The complete date of manufacture is 2 registers.

Address : 0x7024, 0x7028
Data : <Date of Manufacture>

4.3.3.7 Camera Type

This register returns the camera type – The complete assembly is 4 registers.

Address : 0x702C, 0x7030, 0x7034, 0x7038
Data : <Camera Type>

4.3.4 Camera Information Registers

The camera has a set of information registers, which provide information for the camera current status, frame rate, exposure time, image size, etc.

4.3.4.1 Horizontal Frame Size (Max, Min)

This register returns the minimum/maximum horizontal image frame size in pixels. The maximum horizontal image size is a dynamic parameter and changes based on the LVAL selection.

Address	:	0x6080
Data (15:0)	:	<Minimum Horizontal Size>
Data (31:16)	:	<Maximum Horizontal Size>

4.3.4.2 Vertical Frame Size (Max, Min)

This register returns the minimum/maximum vertical image frame size in lines. The maximum vertical image size is a dynamic parameter and changes based on the FVAL selection.

Address	:	0x6084
Data (15:0)	:	<Minimum Vertical Size>
Data (31:16)	:	<Maximum Vertical Size>

4.3.4.3 Current Minimum Frame Time

This register returns the current minimum frame time in us.

Address	:	0x6088
Data (23:0)	:	<Minimum Frame Time>
Data (31:24)	:	N/A

4.3.4.4 Current Minimum Line Time

This register returns the current minimum line time in pixels.

Address	:	0x608C
Data (15:0)	:	N/A
Data (31- 16)	:	<Minimum Line Time>

4.3.4.5 Current Minimum Exposure

This register returns the current minimum possible camera exposure time in us.

Address	:	0x6094
Data (23:0)	:	<Minimum Camera Exposure>
Data (31:24)	:	N/A

4.3.4.6 Current Maximum Exposure

This register returns the current camera maximum exposure time in us. The maximum camera exposure is a dynamic parameter and changes based on the camera mode of operation.

Address	:	0x6090
Data (23:0)	:	<Current Maximum Camera Exposure>
Data (31:24)	:	N/A

4.3.4.7 Current Camera Exposure

This register returns the current camera exposure time in us.

Address	:	0x609C
Data (23:0)	:	<Current Exposure Time>
Data (31:24)	:	N/A

4.3.4.8 Current Frame Time

This register returns the current camera frame time in us.

Address	:	0x60A0
Data (23:0)	:	<Current Frame Time>
Data (31:24)	:	N/A

4.3.4.9 Current Image Size

This register returns the current image frame size in pixels. The image size is a dynamic parameter and changes based on the camera mode of operation.

Address	:	0x60B0
Data (15:0)	:	<Current Horizontal Size>
Data (31:16)	:	<Current Vertical Size>

4.3.4.10 Current Gain & Luminance Status

This register returns the current analog gain and the current average image luminance during normal, AGC and Tap Balance operation.

The Current Analog Gain (register bits D11:D0) displays:

- The current slider gain for tap 1 during normal operation.
- The calculated AGC gain for tap1 when AGC/AEC is enabled.
- The calculated analog gain for tap 2 when tab balancing is enabled.

Address	:	0x60B4
Data (11:0)	:	<Current Analog Gain>
Data (23:12)	:	<Current Average Luminance>

Data (24) : <Analog Gain Minimum Limit Reached>
Data (25) : < Analog Gain Maximum Limit Reached>
Data (27, 26) : N/A
Data (28) : <Exposure Minimum Limit Reached>
Data (29) : <Exposure Maximum Limit Reached>
Data (31, 30) : N/A

4.3.4.11 Current Camera Temperature

This register returns the current camera temperature in degrees Celsius. The temperature resolution is 0.25°C – Table 3.1.

Address : 0x6010
Data (9:0) : <Current Camera Temperature>
Data (31:10) : N/A

Temperature	Register Value
+127.75 °C	01 1111 1111
...	**...**
+0.25 °C	00 0000 0001
0° C	00 0000 0000
-0.25 °C	11 1111 1111
...	**...**
-128 °C	10 0000 0000

Table 3.1 – Current camera temperature values

4.3.5 Image Size (AOI) Workspace Registers

4.3.5.1 Scan Mode Control

This register sets the current CCD readout (scan) mode. The default CCD scanning mode for all Bobcat cameras is progressive, where all pixels within the same exposure period are read out simultaneously. Some CCD imagers allow a sub-sampled scan (center only), where only a sub-section of the pixels is readout, thus providing a higher camera frame rate.

Address : 0x0504
Data (0) : 0 – normal – progressive scan
1 – center – sub-sampled (partial) scan
Data (31:1) : N/A

4.3.5.2 Vertical Binning Mode

This register sets the current binning format in vertical direction. Five possible vertical binning options are possible.

Address	:	0x0500
Data (2:0)	:	000 – 1x vertical binning
		001 – 2x vertical binning
		010 – 3x vertical binning
		011 – 4x vertical binning
		100 – 8x vertical binning
Data (31:3)	:	N/A

4.3.5.3 Horizontal Binning Mode

This register sets the current binning format in horizontal direction. Five possible horizontal binning options are possible.

Address	:	0x0204
Data (2:0)	:	000 – 1x horizontal binning
		001 – 2x horizontal binning
		010 – 3x horizontal binning
		011 – 4x horizontal binning
		100 – 8x horizontal binning
Data (31:3)	:	N/A

4.3.5.4 MAOI

This set of register enables MAOI and sets the appropriate window size and offset in horizontal and vertical direction.

MAOI Enable

Address	:	0x0208
Data (0)	:	0 – MAOI disable
		1 – MAOI enable
Data (31:1)	:	N/A

MAOI Horizontal Offset

Address	:	0x0248
Data (11:0)	:	<value> MAOI offset in horizontal direction
Data (31:12)	:	N/A

MAOI Horizontal Width

Address	:	0x0228
Data (11:0)	:	<value> MAOI width in horizontal direction
Data (31:12)	:	N/A

MAOI Vertical Offset

Address : 0x0288
Data (11:0) : <value> MAOI offset in vertical direction
Data (31:12) : N/A

MAOI Vertical Height
Address : 0x0268
Data (11:0) : <value> MAOI height in vertical direction
Data (31:12) : N/A

4.3.5.5 AOI 1

This set of register enables AOI #1 and sets the appropriate window size and offset in horizontal and vertical direction.

AOI 1 Enable
Address : 0x020C
Data (1:0) : 00 – AOI 1 disable
01 – AOI 1 include
10 – AOI 1 exclude
11 – N/A
Data (31:2) : N/A

AOI 1 Horizontal Offset
Address : 0x024C
Data (11:0) : <value> AOI 1 offset in horizontal direction
Data (31:12) : N/A

AOI 1 Horizontal Width
Address : 0x022C
Data (11:0) : <value> AOI 1 width in horizontal direction
Data (31:12) : N/A

AOI 1 Vertical Offset
Address : 0x028C
Data (11:0) : <value> AOI 1 offset in vertical direction
Data (31:12) : N/A

AOI 1 Vertical Height
Address : 0x026C
Data (11:0) : <value> AOI 1 height in vertical direction
Data (31:12) : N/A

4.3.5.6 AOI 2

This set of register enables AOI #2 and sets the appropriate window size and offset in horizontal and vertical direction.

AOI 2 Enable

Address	:	0x0210
Data (1:0)	:	00 – AOI 2 disable
		01 – AOI 2 include
		10 – AOI 2 exclude
		11 – N/A
Data (31:1)	:	N/A

AOI 2 Horizontal Offset

Address	:	0x0250
Data (11:0)	:	<value> AOI 2 offset in horizontal direction
Data (31:12)	:	N/A

AOI 2 Horizontal Width

Address	:	0x0230
Data (11:0)	:	<value> AOI 2 width in horizontal direction
Data (31:12)	:	N/A

AOI 2 Vertical Offset

Address	:	0x0290
Data (11:0)	:	<value> AOI 2 offset in vertical direction
Data (31:12)	:	N/A

AOI 2 Vertical Height

Address	:	0x0270
Data (11:0)	:	<value> AOI 2 height in vertical direction
Data (31:12)	:	N/A

4.3.5.7 AOI 3

This set of register enables AOI #3 and sets the appropriate window size and offset in horizontal and vertical direction.

AOI 3 Enable

Address	:	0x0214
Data (1:0)	:	00 – AOI 3 disable
		01 – AOI 3 include
		10 – AOI 3 exclude
		11 – N/A
Data (31:2)	:	N/A

AOI 3 Horizontal Offset

Address	:	0x0254
Data (11:0)	:	<value> AOI 3 offset in horizontal direction
Data (31:12)	:	N/A

AOI 3 Horizontal Width

Address	:	0x0234
Data (11:0)	:	<value> AOI 3 width in horizontal direction
Data (31:12)	:	N/A

AOI 3 Vertical Offset

Address	:	0x0294
Data (11:0)	:	<value> AOI 3 offset in vertical direction
Data (31:12)	:	N/A

AOI 3 Vertical Height

Address	:	0x0274
Data (11:0)	:	<value> AOI 3 height in vertical direction
Data (31:12)	:	N/A

4.3.5.8 AOI 4

This set of register enables AOI #4 and sets the appropriate window size and offset in horizontal and vertical direction.

AOI 4 Enable

Address	:	0x0218
Data (1:0)	:	00 – AOI 4 disable 01 – AOI 4 include 10 – AOI 4 exclude 11 – N/A
Data (31:2)	:	N/A

AOI 4 Horizontal Offset

Address	:	0x0258
Data (11:0)	:	<value> AOI 4 offset in horizontal direction
Data (31:12)	:	N/A

AOI 4 Horizontal Width

Address	:	0x0238
Data (11:0)	:	<value> AOI 4 width in horizontal direction
Data (31:12)	:	N/A

AOI 4 Vertical Offset

Address	:	0x0298
Data (11:0)	:	<value> AOI 4 offset in vertical direction
Data (31:12)	:	N/A

AOI 4 Vertical Height

Address	:	0x0278
Data (11:0)	:	<value> AOI 4 height in vertical direction

Data (31:12) : N/A

4.3.5.9 AOI 5

This set of register enables AOI #5 and sets the appropriate window size and offset in horizontal and vertical direction.

AOI 5 Enable

Address : 0x021C
Data (1:0) : 00 – AOI 5 disable
01 – AOI 5 include
10 – AOI 5 exclude
11 – N/A
Data (31:2) : N/A

AOI 5 Horizontal Offset

Address : 0x025C
Data (11:0) : <value> AOI 5 offset in horizontal direction
Data (31:12) : N/A

AOI 5 Horizontal Width

Address : 0x023C
Data (11:0) : <value> AOI 5 width in horizontal direction
Data (31:12) : N/A

AOI 5 Vertical Offset

Address : 0x029C
Data (11:0) : <value> AOI 5 offset in vertical direction
Data (31:12) : N/A

AOI 5 Vertical Height

Address : 0x027C
Data (11:0) : <value> AOI 5 height in vertical direction
Data (31:12) : N/A

4.3.5.10 AOI 6

This set of register enables AOI #6 and sets the appropriate window size and offset in horizontal and vertical direction.

AOI 6 Enable

Address : 0x0220
Data (1:0) : 00 – AOI 6 disable
01 – AOI 6 include
10 – AOI 6 exclude

11 – N/A
Data (31:2) : N/A

AOI 6 Horizontal Offset
Address : 0x0260
Data (11:0) : <value> AOI 6 offset in horizontal direction
Data (31:12) : N/A

AOI 6 Horizontal Width
Address : 0x0240
Data (11:0) : <value> AOI 6 width in horizontal direction
Data (31:12) : N/A

AOI 6 Vertical Offset
Address : 0x02A0
Data (11:0) : <value> AOI 6 offset in vertical direction
Data (31:12) : N/A

AOI 6 Vertical Height
Address : 0x0280
Data (11:0) : <value> AOI 6 height in vertical direction
Data (31:12) : N/A

4.3.5.11 Frame Rate Control

This register enables the camera frame rate to stay the same and to be independent of the AOI vertical window size. If enabled the camera frame rate will increase when the vertical window size decreases.

Address : 0x0200
Data (0) : 0 – constant frame rate disable
1 – constant frame rate enable
Data (31:1) : N/A

4.3.5.12 LVAL Size Control

This register sets the number of active image pixels per line (LVAL). Two possible options are available – "all visible pixels" or "active pixels only".

Address : 0x05A8
Data (0) : 0 – display active pixels only
1 – display all visible pixels
Data (31:1) : N/A

4.3.5.13 FVAL Size Control

This register sets the number of active image lines per frame (FVAL). Two possible options are available – "all visible lines" or "active lines only".

Address	:	0x05AC
Data (0)	:	0 – display active lines only 1 – display all visible lines
Data (31:1)	:	N/A

4.3.6 Exposure Control Workspace Registers

4.3.6.1 Exposure Control Mode

This register sets the exposure control mode and for the camera.

Address	:	0x0544
Data (1:0)	:	00 – off – no exposure control 01 – pulse width – the duration of the selected trigger pulse determines the exposure during triggering 10 – internal – exposure control register 0x0548 sets the camera exposure 11 – external – an external signal via the camera I/O determines the exposure.
Data (31:2)	:	N/A

4.3.6.2 Exposure Time Absolute

This register sets the actual camera exposure time when "Internal" exposure mode is selected.

Address	:	0x0548
Data (23:0)	:	<value> – actual exposure time in micro seconds.
Data (31:24)	:	N/A

4.3.6.3 Programmable Line Time Enable

This register enables a programmable line time mode. The user can extend the camera line time beyond the camera free-running line time. This applies to all lines in the frame.

Address	:	0x054C
Data (0)	:	0 – disable programmable line time. 1 – enable programmable line time
Data (31:1)	:	N/A

4.3.6.4 Programmable Line Time Absolute

This register sets the actual line time in pixels.

Address	:	0x0554
Data (12:0)	:	<value> – actual line time in pixels.
Data (31:13)	:	N/A

4.3.6.5 Programmable Frame Time Enable

This register enables a programmable frame time mode. The user can extend the camera frame time beyond the camera free-running frame time up to ~ 16 seconds. This is also known as long integration.

Address	:	0x0550
Data (0)	:	0 – disable programmable frame time. 1 – enable programmable frame time
Data (31:1)	:	N/A

4.3.6.6 Programmable Frame Time Absolute

This register sets the actual frame time in microseconds.

Address	:	0x0558
Data (23:0)	:	<value> – actual frame time in micro seconds.
Data (31:24)	:	N/A

4.3.6.7 Camera Speed Selection

This register sets the camera speed. Two modes are available – normal and fast (over-clocked). The free-running frame rate increases in fast mode.

Address	:	0x0608
Data (0)	:	0 – normal speed. 1 – fast speed.
Data (31:1)	:	N/A

4.3.7 AEC, AGC, AIC Workspace Registers

4.3.7.1 Auto Exposure Control (AEC)

This register enables the auto exposure control.

Address	:	0x0150
Data (0)	:	0 – disable auto exposure control 1 – enable auto exposure control
Data (31:1)	:	N/A

4.3.7.2 Maximum Exposure Time Limit

This register sets the maximum exposure time limit during AEC. The automatic exposure control process will keep the camera exposure always below the set level. This is to prevent motion smear. The Minimum Exposure Time Limit is factory preset.

Address	:	0x05B0
Data (23:0)	:	<value> – maximum exposure time limit
Data (31:24)	:	N/A

4.3.7.3 Exposure Correction Speed

This register sets the exposure correction speed during AEC. The automatic exposure control process can set the algorithm convergence speed, i.e. how long it takes to reach the desired exposure.

Address	:	0x0174
Data (1:0)	:	00 – 1x speed – slow 01 – 2x speed 10 – 3x speed 11 – 4x speed – fast
Data (31:2)	:	N/A

4.3.7.4 Auto Gain Control (AGC)

This register enables the auto gain control.

Address	:	0x0154
Data (0)	:	0 – disable auto gain control 1 – enable auto gain control
Data (31:1)	:	N/A

4.3.7.5 Maximum Gain Limit

This register sets the maximum analog gain limit during AGC. The automatic gain control process will keep the camera analog gain always below the set level. The Minimum Analog Gain Limit is factory preset.

Address	:	0x0160
Data (9:0)	:	<value> – maximum analog gain limit
Data (31:10)	:	N/A

4.3.7.6 Gain Correction Speed

This register sets the gain correction speed during AGC. The automatic gain control process can set the algorithm convergence speed, i.e. how long it takes to reach the desired gain.

Address	:	0x0178
Data (1:0)	:	00 – 1x speed – slow 01 – 2x speed

10 – 3x speed
11 – 4x speed – fast
Data (31:2) : N/A

4.3.7.7 Luminance Level Threshold

This register sets the desired luminance level to be maintained during AEC or AGC process.

Address : 0x0158
Data (11:0) : <value> – desired luminance level
Data (31:12) : N/A

4.3.7.8 Luminance Type Selection

This register sets the luminance mode to be used during AEC or AGC process. The correction algorithm can use the average luminance for the entire frame or the peak luminance in the frame.

Address : 0x017C
Data (1:0) : 00 – average luminance
01 – peak luminance
10 or 11 – reserved
Data (31:2) : N/A

4.3.7.9 Region of Interest Selection (AOI)

This set of register sets the region of interest to be used during AEC or AGC process. The correction algorithm can use as a sampling (data collection) region the entire frame or only a portion (AOI) of it.

AOI Horizontal Offset
Address : 0x0168
Data (11:0) : <value> AOI offset in horizontal direction
Data (31:12) : N/A

AOI Horizontal Width
Address : 0x0164
Data (11:0) : <value> AOI width in horizontal direction
Data (31:12) : N/A

AOI Vertical Offset
Address : 0x0170
Data (11:0) : <value> AOI offset in vertical direction
Data (31:12) : N/A

AOI Vertical Height
Address : 0x016C

Data (11:0) : <value> AOI height in vertical direction
Data (31:12) : N/A

4.3.7.10 Auto Iris Control (AIC)

This register enables the auto iris control.

Address : 0x014C
Data (0) : 0 – disable auto iris control
1 – enable auto iris control
Data (31:1) : N/A
Gain and Offset Workspace Registers

4.3.8 Video Amp, Gain and Offset Workspace Registers

4.3.8.1 Pre-amplifier Gain – Channel 1

This register sets the pre-amplifier analog gain for channel 1.

Address : 0x0000
Data (1:0) : 00 – -3.0 dB pre-amplifier gain channel 1
01 – 0.0 dB pre-amplifier gain channel 1
10 – +3.0 dB pre-amplifier gain channel 1
11 – +6.0 dB pre-amplifier gain channel 1
Data (31:2) : N/A

4.3.8.2 Analog Gain – Channel 1

This register sets the main analog gain for channel 1.

Address : 0x0004
Data (9:0) : <value> – analog gain channel 1
Data (31:10) : N/A

4.3.8.3 Analog Offset – Channel 1

This register sets the analog offset for channel 1.

Address : 0x0008
Data (9:0) : <value> – analog offset channel 1
Data (31:10) : N/A

4.3.8.4 Pre-amplifier Gain – Channel 2

This register sets the pre-amplifier analog gain for channel 2.

Address : 0x0010
Data (1:0) : 00 – -3.0 dB pre-amplifier gain channel 2

01 – 0.0 dB pre-amplifier gain channel 2
10 – +3.0 dB pre-amplifier gain channel 2
11 – +6.0 dB pre-amplifier gain channel 2

Data (31:2) : N/A

4.3.8.5 Analog Gain – Channel 2

This register sets the main analog gain for channel 2.

Address : 0x0014
Data (9:0) : <value> – analog gain channel 2
Data (31:10) : N/A

4.3.8.6 Analog Offset – Channel 2

This register sets the analog offset for channel 2.

Address : 0x0018
Data (9:0) : <value> – analog offset channel 2
Data (31:10) : N/A

4.3.8.7 Pre-amplifier Gain – Channel 3

This register sets the pre-amplifier analog gain for channel 3.

Address : 0x0020
Data (1:0) : 00 – -3.0 dB pre-amplifier gain channel 3
01 – 0.0 dB pre-amplifier gain channel 3
10 – +3.0 dB pre-amplifier gain channel 3
11 – +6.0 dB pre-amplifier gain channel 3
+
Data (31:2) : N/A

4.3.8.8 Analog Gain – Channel 3

This register sets the main analog gain for channel 3.

Address : 0x0024
Data (9:0) : <value> – analog gain channel 3
Data (31:10) : N/A

4.3.8.9 Analog Offset – Channel 3

This register sets the analog offset for channel 3.

Address : 0x0028
Data (9:0) : <value> – analog offset channel 3
Data (31:10) : N/A

4.3.8.10 Pre-amplifier Gain – Channel 4

This register sets the pre-amplifier analog gain for channel 4.

Address	:	0x0030
Data (1:0)	:	00 – -3.0 dB pre-amplifier gain channel 4 01 – 0.0 dB pre-amplifier gain channel 4 10 – +3.0 dB pre-amplifier gain channel 4 11 – +6.0 dB pre-amplifier gain channel 4
Data (31:2)	:	N/A

4.3.8.11 Analog Gain – Channel 4

This register sets the main analog gain for channel 4.

Address	:	0x0034
Data (9:0)	:	<value> – analog gain channel 4
Data (31:10)	:	N/A

4.3.8.12 Analog Offset – Channel 4

This register sets the analog offset for channel 4.

Address	:	0x0038
Data (9:0)	:	<value> – analog offset channel 4
Data (31:10)	:	N/A

4.3.8.13 Digital Gain

This register sets the main digital gain. The digital gain is applied to both channels. The step is 0.1x

Address	:	0x0180
Data (4:0)	:	<value> – digital gain
Data (31:5)	:	N/A

4.3.8.14 Digital Offset

This register sets the main digital offset. The digital offset is applied to both cannels.

Address	:	0x0184
Data (9:0)	:	<value> – digital offset
Data (31:10)	:	N/A

4.3.8.15 Black Level Correction

This register enables the black level correction.

Address	:	0x0114
Data (0)	:	0 – disable black level correction 1 – enable black level correction
Data (31:2)	:	N/A

4.3.8.16 Tap Balance

This register enables the tap balance. If the "Tap balance once" is to be used, the register has to be set every time from "00" to "10".

Address	:	0x0110
Data (1:0)	:	00 – no tap balance 01 – dynamic automatic tap balance 10 – dynamic balance taps once 11 – static automatic tap balance
Data (31:2)	:	N/A

4.3.9 Triggering Workspace Registers

4.3.9.1 Trigger Input Selector

This register selects the triggering source.

Address	:	0x0508
Data (2:0)	:	000 – off – no trigger, free running mode – CL only (this is not available for GigE cameras) 001 – external – the camera expects the trigger to come from the external source mapped to the power and I/O connector. 010 – internal – the camera expects the trigger to come from the programmable pulse generator. 011 – computer – the camera expects the trigger to come from the camera link cable. 100 – software trigger – expects a one clock cycles pulse generated by the computer. The trigger exposure is internal register controlled. Pulse duration exposure is not allowed. 101 to 111 – N/A
Data (31:3)	:	N/A

4.3.9.2 Trigger Input Mode – GigE cameras

This register enables or disables the triggering operation for GigE cameras.

Address	:	0x05BC
Data (0)	:	1 – trigger is disabled, free running mode 0 – trigger is enabled – camera is in trigger mode
Data (31:1)	:	N/A

4.3.9.3 Software Trigger Start

The 'Start SW Trigger' command instructs the camera to generate one short trigger pulse. This is a command, not a register. The act of writing to this location initiates the pulse generation.

Address : 0x6030

4.3.9.4 Triggering Edge Selector

This register selects the triggering edge – Rising or Falling.

Address	:	0x050C
Data (0)	:	0 – rising edge 1 – falling edge
Data (31:1)	:	N/A

4.3.9.5 Trigger De-bounce Time

This register selects the trigger signal de-bounce time. Any subsequent trigger signals coming to the camera within the de-bounce time interval will be ignored.

Address	:	0x0510
Data (2:0)	:	000 – no de-bounce 100 – 10 µs de-bounce time 101 – 50 µs de-bounce time 001 – 100 µs de-bounce time 110 – 500 µs de-bounce time 010 – 1.0 ms de-bounce time 111 – 5.0 ms de-bounce time 011 – 10.0 ms de-bounce time
Data (31:3)	:	N/A

4.3.9.6 Trigger Overlap

This register selects the trigger overlap mode. If the camera receives a trigger pulse while the camera is still processing the previous trigger, the user has the option to ignore the incoming trigger or to terminate the previous process and to start a new one.

Address	:	0x0514
Data (1:0)	:	00 – ignore the next trigger 01 – accept only after the exposure is completed 10 – accept at any time 11 – N/A
Data (31:2)	:	N/A

4.3.9.7 Triggering Mode Selection

This register selects the triggering mode.

Address	:	0x0518
Data (3:0)	:	0x0 – standard triggering 0x1 – fast triggering 0x2 – double triggering 0x3 – frame accumulation 0x4 – asynchronous triggering 0x5 to 0xF – reserved
Data (31:4)	:	N/A

4.3.9.8 Number of Frames Captured

This register selects the number of frames captured after each trigger signal.

Address	:	0x051C
Data (15:0)	:	<value> – # of frames captured
Data (31:16)	:	N/A

4.3.9.9 Number of Pulses Used

This register selects the number of trigger pulses used during a single trigger sequence in frame accumulation mode.

Address	:	0x0520
Data (15:0)	:	<value> – # of pulses used
Data (31:16)	:	N/A

4.3.9.10 Trigger Exposure Delay

This register selects the delay between the trigger signal and the beginning of exposure. The actual exposure can set using "Exposure Time Absolute" register 0x0548.

Address	:	0x0528
Data (23:0)	:	<value> – exposure delay in microseconds
Data (31:24)	:	N/A

4.3.9.11 Trigger Strobe Enable

This register enables a strobe signal synchronous with the trigger pulse. The strobe signal is mapped to one or both of the available strobe outputs.

Address	:	0x0524
Data (1:0)	:	00 – no strobe signal 01 – enable Strobe #1 10 – enable Strobe #2 11 – enable Strobe #1 and Strobe #2
Data (31:2)	:	N/A

4.3.9.12 Trigger Strobe Position Delay

This register sets the delay between the trigger pulse and the strobe pulse.

Address	:	0x052C
Data (23:0)	:	<value> – trigger strobe delay
Data (31:24)	:	N/A

4.3.9.13 Trigger Strobe Pulse Duration

This register sets the strobe pulse duration.

Address	:	0x05B8
Data (23:0)	:	<value> – trigger strobe duration
Data (31:24)	:	N/A

4.3.10 Pulse Generator Workspace Registers

4.3.10.1 Pulse Generator Timing Granularity

This register sets the pulse generator main timing resolution. The main resolution is in microseconds, and 4 granularity steps are possible – x1, x10, x100, x1000 (x1000 is equal to 1ms timing resolution).

Address	:	0x0530
Data (1:0)	:	00 – x1 01 – x10 10 – x100 11 – x1000
Data (31:2)	:	N/A

4.3.10.2 Pulse Generator Pulse Width

This register sets the value of the pulse width in microseconds.

Address	:	0x0534
Data (18:0)	:	<value> – pulse width in microseconds
Data (31:19)	:	N/A

4.3.10.3 Pulse Generator Pulse Period

This register sets the value of the pulse period in microseconds.

Address	:	0x0538
Data (19:0)	:	<value> – pulse width in microseconds
Data (31:20)	:	N/A

4.3.10.4 Pulse Generator Number of Pulses

This register sets the number of the pulses generated.

Address	:	0x053C
Data (15:0)	:	<value> – number of discrete pulses
Data (16)	:	1 – continuous pulse generation
Data (31:17)	:	N/A

4.3.10.5 Pulse Generator Enable

This register enables the pulse generator.

Address	:	0x0540
Data (0)	:	0 – disable pulse generator operation 1 – enable pulse generator operation
Data (31:1)	:	N/A

4.3.11 Test Pattern Workspace Registers

4.3.11.1 Test Mode Select

This register selects the test mode pattern.

Address	:	0x012C
Data (3:0)	:	0x0 – no test pattern 0x1 – black image – 0x000 0x2 – gray image – 0x1FF 0x3 – white image – 0xFFF 0x4 – steady horizontal image ramp 0x5 – steady vertical image ramp 0x6 – moving horizontal image ramp 0x7 – moving vertical image ramp 0x8 – 8 gray scale vertical bars 0x9 – H & V lines superimposed over live image 0xA to 0xF - reserved
Data (31:4)	:	N/A

4.3.11.2 H & V Lines Superimpose Enable

This register enables the H & V lines superimposed over live image.

Address	:	0x0130
Data (0)	:	0 – disable lines superimposed 1 – enable lines superimposed
Data (31:1)	:	N/A

4.3.11.3 H1 Superimposed Line Position

This register set the position of the horizontal line H1 (top) position.

Address	:	0x0138
Data (11:0)	:	<value> – H1 line position
Data (31:12)	:	N/A

4.3.11.4 H2 Superimposed Line Position

This register set the position of the horizontal line H2 (bottom) position.

Address	:	0x013C
Data (11:0)	:	<value> – H2 line position
Data (31:12)	:	N/A

4.3.11.5 V1 Superimposed Column Position

This register set the position of the vertical column V1 (left) position.

Address	:	0x0140
Data (11:0)	:	<value> – V1 column position
Data (31:12)	:	N/A

4.3.11.6 V2 Superimposed Column Position

This register set the position of the vertical column V2 (right) position.

Address	:	0x0144
Data (11:0)	:	<value> – V2 column position
Data (31:12)	:	N/A

4.3.11.7 Superimposed Lines Brightness

This register set the brightness of the superimposed cross and H & V lines.

Address	:	0x0148
Data (11:0)	:	<value> – line brightness
Data (31:12)	:	N/A

4.3.11.8 Center Cross Superimpose Enable

This register enables center cross, superimposed over live image. This shows the optical image center.

Address	:	0x0134
Data (0)	:	0 – disable cross superimposed 1 – enable cross superimposed
Data (31:1)	:	N/A

4.3.12 Input/output Workspace Registers

4.3.12.1 CC1 Input Polarity

This register sets the polarity (active Low or High) for the CC1 input.

Address	:	0x0570
Data (0)	:	0 – active LOW 1 – active HIGH
Data (31:1)	:	N/A

4.3.12.2 CC1 Input Mapping

This register maps the CC1 camera input to various internal signals.

Address	:	0x0574
Data (2:0)	:	000 – no mapping 001 – computer trigger 010 – reserved 011 – exposure control 100 – H sync 101 – V sync 110, 111 – Reserved
Data (31:3)	:	N/A

4.3.12.3 CC2 Input Polarity

This register sets the polarity (active Low or High) for the CC2 input.

Address	:	0x0578
Data (0)	:	0 – active LOW 1 – active HIGH
Data (31:1)	:	N/A

4.3.12.4 CC2 Input Mapping

This register maps CC2 camera input to various internal signals.

Address	:	0x057C
Data (2:0)	:	000 – no mapping 001 – computer trigger 010 – reserved 011 – exposure control 100 – H sync 101 – V sync 110, 111 – Reserved
Data (31:3)	:	N/A

4.3.12.5 IN1 Input Polarity

This register sets the polarity (active Low or High) for the IN1 input.

Address	:	0x0580
Data (0)	:	0 – active LOW 1 – active HIGH
Data (31:1)	:	N/A

4.3.12.6 IN1 Input Mapping

This register maps the IN1 camera input to various internal signals.

Address	:	0x0584
Data (2:0)	:	000 – no mapping 001 – reserved 010 – external trigger 011 – exposure control 100 – H sync 101 – V sync 110, 111 – Reserved
Data (31:3)	:	N/A

4.3.12.7 IN2 Input Polarity

This register sets the polarity (active Low or High) for the IN2 input.

Address	:	0x0588
Data (0)	:	0 – active LOW 1 – active HIGH
Data (31:1)	:	N/A

4.3.12.8 IN2 Input Mapping

This register maps the IN2 camera input to various internal signals.

Address	:	0x058C
Data (2:0)	:	000 – no mapping 001 – reserved 010 – external trigger 011 – exposure control 100 – H sync 101 – V sync 110, 111 – Reserved
Data (31:3)	:	N/A

4.3.12.9 OUT1 Output Polarity

This register sets the polarity (active Low or High) for the OUT1 output.

Address	:	0x0590

Data (0)	:	0 – active LOW 1 – active HIGH
Data (31:1)	:	N/A

4.3.12.10OUT1 Output Mapping

This register maps the various internal signals to OUT1 camera output.

Address	:	0x0594
Data (3:0)	:	0000 – no mapping 0001 – exposure start 0010 – exposure end 0011 – mid exposure 0100 – active exposure window 0101 – H sync 0110 – V sync 0111 – odd/even frame flag 1000 – trigger pulse actual 1001 – trigger pulse delayed 1010 – camera ready 1011 – pulse generator 1100 – strobe #1 1101 – strobe #2 1110 – Software (Bit Toggle) Others – reserved
Data (31:4)	:	N/A

4.3.12.11OUT2 Output Polarity

This register sets the polarity (active Low or High) for the OUT2 output.

Address	:	0x0598
Data (0)	:	0 – active LOW 1 – active HIGH
Data (31:1)	:	N/A

4.3.12.12OUT2 Output Mapping

This register maps the various internal signals to OUT2 camera output.

Address	:	0x059C
Data (3:0)	:	0000 – no mapping 0001 – exposure start 0010 – exposure end 0011 – mid exposure 0100 – active exposure window 0101 – H sync 0110 – V sync

0111 – odd/even frame flag
1000 – trigger pulse actual
1001 – trigger pulse delayed
1010 – camera ready
1011 – pulse generator
1100 – strobe #1
1101 – strobe #2
1110 – Software (Bit Toggle)
Others – reserved

Data (31:4) : N/A

4.3.12.13 CLSP Output Polarity

This register sets the polarity (active Low or High) for the CLSP (Camera Link Cable Spare) output.

Address : 0x05A0
Data (0) : 0 – active LOW
1 – active HIGH
Data (31:1) : N/A

4.3.12.14 CLSP Output Mapping

This register maps the various internal signals to CLSP camera output.

Address : 0x05A4
Data (3:0) : 0000 – no mapping
0001 – exposure start
0010 – exposure end
0011 – mid exposure
0100 – active exposure window
0101 – H sync
0110 – V sync
0111 – odd/even frame flag
1000 – trigger pulse actual
1001 – trigger pulse delayed
1010 – camera ready
1011 – pulse generator
1100 – strobe #1
1101 – strobe #2
Others – reserved
Data (31:4) : N/A

4.3.12.15 Strobe #1 Select

This register sets the Strobe #1 mode of operation.

Address	:	0x055C
Data (1:0)	:	00 – disable Strobe #1 01 – enable Strobe #1 each frame 10 – enable Strobe #1 odd frames only 11 – enable Strobe #1 even frames only
Data (31:2)	:	N/A

4.3.12.16 Strobe #1 Position

This register sets the position of the strobe #1 pulse with respect of the end of the frame.

Address	:	0x0568
Data (23:0)	:	<value> – strobe #1 pulse positions in microseconds
Data (31:24)	:	N/A

4.3.12.17 Strobe #2 Select

This register sets the Strobe #2 mode of operation.

Address	:	0x0560
Data (1:0)	:	00 – disable Strobe #2 01 – enable Strobe #2 each frame 10 – enable Strobe #2 odd frames only 11 – enable Strobe #2 even frames only
Data (31:2)	:	N/A

4.3.12.18 Strobe #2 Position

This register sets the position of the strobe #2 pulse with respect of the end of the frame.

Address	:	0x056C
Data (23:0)	:	<value> – strobe #2 pulse positions in microseconds
Data (31:24)	:	N/A

4.3.12.19 Strobe #1 Duration

This register sets the duration of the strobe pulse (the same for both strobes).

Address	:	0x0564
Data (23:0)	:	<value> – strobe pulse duration in microseconds
Data (31:24)	:	N/A

4.3.12.20 Strobe #2 Duration

This register sets the duration of the strobe pulse (the same for both strobes).

Address	:	0x05B4

Data (23:0) : <value> – strobe pulse duration in microseconds
Data (31:24) : N/A

4.3.13 Output Data Format

4.3.13.1 Bit Depth/Format Selector

This register selects the bit depth output for the camera.

Address : 0x0100
Data (2:0) : 000 – 8-bit
001 – 10-bit
010 – 12-bit
011 – 14-bit – single tap cameras only
100 – 3x8-bit – RGB color (B0610, B1410, B1610 only)
Data (31:3) : N/A

4.3.13.2 Tap Mode Selector

This register selects the number of imager taps to be displayed.

Address : 0x0108
Data (1:0) : 00 – single
01 – dual
10, 11 – reserved
Data (31:2) : N/A

4.3.13.3 Data Format Selector

This register selects the tap format for the camera data output.

Address : 0x010C
Data (2:0) : 000 – 1 tap single output
001 – 2 tap interleaved
010 – 2 tap sequential
Others – reserved
Data (31:2) : N/A

4.3.13.4 Bit Shift Selector

This register selects the bit shift steps for the camera data output.

Address : 0x0104
Data (3:0) : 0x0 – no shift
0x1 – 1 bit left
0x2 – 2 bits left
0x3 – 3 bits left

0x4 – 4 bits left
0x5 – 5 bits left
0x6 – 6 bits left
0x7 – 7 bits left
0x8 – reserved
0x9 – 1 bit right
0xA – 2 bits right
0xB – 3 bits right
0xC – 4 bits right
0xD – 5 bits right
0xE – 6 bits right
0xF – 7 bits right

Data (31:4) : N/A

4.3.13.5 Negative Image Enable

This register inverts the image from positive to negative.

Address : 0x0188
Data (0) : 0 – positive image
1 – negative image
Data (31:1) : N/A

4.3.14 White Balance Workspace Registers

4.3.14.1 WB Select

This register selects which white balance mode will be used – Off, Once, Auto or Manual.

Address : 0x0300
Data (0:1) : 00 – Off
01 – WB Once
10 – WB Auto
11 – WB Manual
Data (31:2) : N/A

4.3.14.2 WBC Red

This register contains the white balance correction coefficients for Red. In manual mode, the user enters the value, in Once or Auto, the camera returns the actual (calculated) coefficient.

Address : 0x0304
Data (0:11) : <value> - WBC Red
Data (31:12) : N/A

4.3.14.3 WBC Green

This register contains the white balance correction coefficients for Green. In manual mode, the user enters the value, in Once or Auto, the camera returns the actual (calculated) coefficient.

Address	:	0x0308
Data (0:11)	:	<value> - WBC Green
Data (31:12)	:	N/A

4.3.14.4 WBC Blue

This register contains the white balance correction coefficients for Blue. In manual mode, the user enters the value, in Once or Auto, the camera returns the actual (calculated) coefficient.

Address	:	0x030C
Data (0:11)	:	<value> - WBC Blue
Data (31:12)	:	N/A

4.3.15 Color Conversion Workspace Registers

4.3.15.1 Gain Red

This register sets the digital gain for Red.

Address	:	0x0310
Data (0:11)	:	<value> - Gain Red
Data (31:12)	:	N/A

4.3.15.2 Gain Green

This register sets the digital gain for Green.

Address	:	0x0314
Data (0:11)	:	<value> - Gain Green
Data (31:12)	:	N/A

4.3.15.3 Gain Blue

This register sets the digital gain for Blue.

Address	:	0x0318
Data (0:11)	:	<value> - Gain Blue
Data (31:12)	:	N/A

4.3.15.4 Offset Red

This register sets the digital offset for Red.

Address	:	0x031C
Data (0:11)	:	<value> - Offset Red
Data (31:12)	:	N/A

4.3.15.5 Offset Green

This register sets the digital offset for Green.

Address	:	0x0320
Data (0:11)	:	<value> - Offset Green
Data (31:12)	:	N/A

4.3.15.6 Offset Blue

This register sets the digital offset for Blue.

Address	:	0x0324
Data (0:11)	:	<value> - Offset Blue
Data (31:12)	:	N/A

4.3.16 Data Correction Workspace Registers

4.3.16.1 LUT Select

This register selects which LUT will be used – LUT1 or LUT2.

Address	:	0x0118
Data (0)	:	0 – LUT #1 selected 1 – LUT #2 selected
Data (31:1)	:	N/A

4.3.16.2 LUT Enable

This register enables the selected LUT.

Address	:	0x011C
Data (0)	:	0 – LUT disable 1 – LUT enable
Data (31:1)	:	N/A

4.3.16.3 DPC Enable

This register enables the DPC (Defective Pixel Correction).

Address	:	0x0120
Data (1:0)	:	00 – DPC disable 01 – Static DPC enable

10 – Dynamic DPC enable
11 – Static and Dynamic DPC enable

Data (31:2) : N/A

4.3.16.4 HPC Enable

This register enables the HPC (Hot Pixel Correction).

Address : 0x0124
Data (1:0) : 00 – HPC disable
01 – Static HPC enable
10 – Dynamic HPC enable
11 – Static and Dynamic HPC enable
Data (31:2) : N/A

4.3.16.5 FFC Enable

This register enables the FFC (Flat Field Correction).

Address : 0x0128
Data (0) : 0 – FFC disable
1 – FFC enable
Data (31:1) : N/A

4.4 DATA PROCESSING REGISTER DESCRIPTION

4.4.1 Image Enhancement Workspace Registers

4.4.1.1 Enhancement Mode Selector

This register selects the image enhancement mode of operation.

Address : 0x0400
Data (3:0) : 0x0 – enhancement disable
0x1 – single threshold binary
0x2 – dual threshold binary
0x3 – dual threshold with gray scale
0x4 – dual threshold with contrast enhancement
0x5 – single point correction
0x6 – multi point correction
Data (31:4) : N/A

4.4.1.2 Point X1 Position

This register selects the position value for point X1.

Address : 0x0404
Data (11:0) : <value> – point X1 position value
Data (31:12) : N/A

4.4.1.3 Point X2 Position

This register selects the position value for point X2.

Address : 0x0408
Data (11:0) : <value> – point X2 position value
Data (31:12) : N/A

4.4.1.4 Point Y1 Position

This register selects the position value for point Y1.

Address : 0x040C
Data (11:0) : <value> – point Y1 position value
Data (31:12) : N/A

4.4.1.5 Point Y2 Position

This register selects the position value for point Y2.

Address : 0x0410
Data (11:0) : <value> – point Y2 position value
Data (31:12) : N/A

4.4.1.6 Processing and LUT AOI (PAOI)

This set of register enables the processing and/or LUT AOI and sets the appropriate window size and offset in horizontal and vertical direction. The processing algorithm or LUT will be implemented ONLY within the selected AOI.

PAOI Enable

Address : 0x0224
Data (1:0) : 00 – PAOI disable
01 – Reserved
10 – PAOI enabled as processing AOI
11 – PAOI enabled as LUT AOI
Data (31:2) : N/A

PAOI Horizontal Offset

Address : 0x0264
Data (11:0) : <value> PAOI offset in horizontal direction
Data (31:12) : N/A

PAOI Horizontal Width

Address	:	0x0244
Data (11:0)	:	<value> PAOI width in horizontal direction
Data (31:12)	:	N/A

PAOI Vertical Offset

Address	:	0x02A4
Data (11:0)	:	<value> PAOI offset in vertical direction
Data (31:12)	:	N/A

PAOI Vertical Height

Address	:	0x0284
Data (11:0)	:	<value> PAOI height in vertical direction
Data (31:12)	:	N/A

4.5 LENS CONTROLLER REGISTER DESCRIPTION

4.5.1 Lens Controller Workspace Registers

4.5.1.1 Pulse Width Selection

This register sets the lens controller motor drive pulse width.

Address	:	0x042C
Data (3:0)	:	0x0 – 1 ms
	:	0x1 – 2 ms
	:	0x2 – 4 ms
	:	0x3 – 8 ms
Data (31:8)	:	N/A

4.5.1.2 Voltage

This register sets the lens controller control voltage.

Address	:	0x042C
Data (7:4)	:	0x0 – 6 volts
	:	0x1 – 12 volts
Data (31:8)	:	N/A

4.5.1.3 Zoom Travel Distance Selection

This register sets the number of motor control pulses to control zoom travel distance.

Address	:	0x0424

Data (11:0)	:	0x001 – min travel distance (GUI slider, Wide)
	:	0xFFF – max travel distance (GUI slider, Narrow)
Data (23:16)	:	0x1 – Zoom Wide (slider/window #), (GUI, <)
	:	0x2 – Zoom Narrow (slider/window #), (GUI, >)
	:	0x4 – Zoom Wide (full, 0xFFF pulses), (GUI, <<)
	:	0x8 – Zoom Narrow (full, 0xFFF pulses), (GUI, >>)
	:	0x10 – Zoom Stop
Data (15:12)	:	N/A
Data (31:24)	:	N/A

4.5.1.4 Zoom Speed Selection

This register sets the distance between motor control pulses to control zoom speed.

Address	:	0x0428
Data (7:0)	:	0x01 – minimum speed (GUI, SPD)
	:	0xFF – maximum speed (GUI, SPD)
Data (31:8)	:	N/A

4.5.1.5 Focus Travel Distance Selection

This register sets the number of motor control pulses to control focus travel distance.

Address	:	0x041C
Data (11:0)	:	0x001 – min travel distance (GUI, Near)
	:	0xFFF – max travel distance (GUI, Far)
Data (23:16)	:	0x1 – Focus Near (slider/window #), (GUI, <)
	:	0x2 – Focus Far (slider/window #), (GUI, >)
	:	0x4 – Focus Near (full, 0xFFF pulses), (GUI, <<)
	:	0x8 – Focus Far (full, 0xFFF pulses), (GUI, >>)
Data (15:12)	:	N/A
Data (31:24)	:	N/A

4.5.1.6 Focus Speed Selection

This register sets the distance between motor control pulses to control focus speed.

Address	:	0x0420
Data (7:0)	:	0x01 – minimum speed (GUI, SPD)
	:	0xFF – maximum speed (GUI, SPD)
Data (31:8)	:	N/A

4.5.1.2 Iris Travel Distance Selection

This register sets the number of motor control pulses to control iris travel distance.

Address	:	0x0414
Data (11:0)	:	0x001 – min travel distance (GUI, Close)
	:	0xFFF – max travel distance (GUI, Open)

Data (23:16)	:	0x1 – Iris Close (slider/window #), (GUI, <)
	:	0x2 – Iris Open (slider/window #), (GUI, >)
	:	0x4 – Iris Close (full, 0xFFF pulses), (GUI, <<)
	:	0x8 – Iris Open (full, 0xFFF pulses), (GUI, >>)
Data (15:12)	:	N/A
Data (31:24)	:	N/A

4.5.1.3 Iris Speed Selection

This register sets the distance between motor control pulses to control iris speed.

Address	:	0x0418
Data (7:0)	:	0x01 – minimum speed (GUI , SPD)
	:	0xFF – maximum speed (GUI, SPD)
Data (31:8)	:	N/A

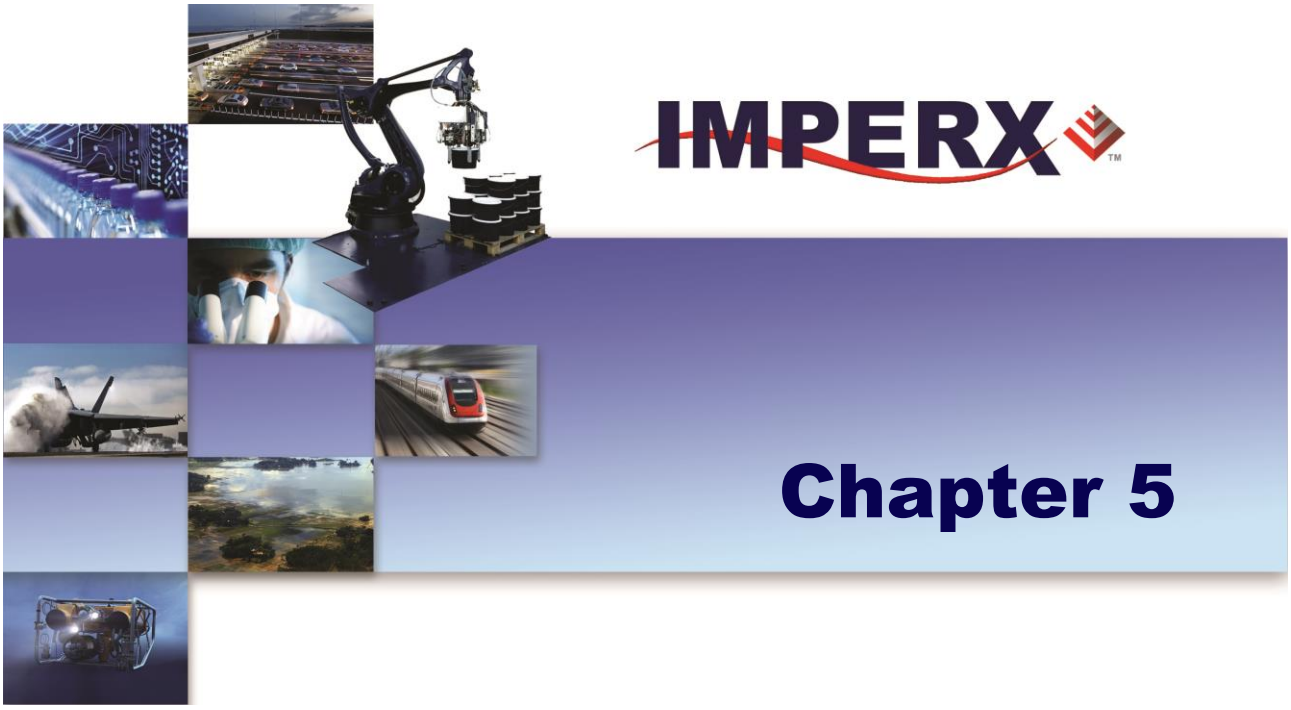

Quick reference guide to use of the camera configuration utility for IMPERX BOBCAT Camera Link cameras

5.1 OVERVIEW

Camera configuration utility software and Bobcat Camera Configurator (CamConfig) are provided with each camera. After installing the program, the user can program the camera, change its settings and save the settings in a file or in the camera. The configuration utility includes an interactive help file, which will guide you through the camera setup.

5.2 DISCOVERY PROCEDURE

Often times, multiple frame grabbers and cameras may be installed into a computer at the same time. The CamConfig utility provides an intelligent, automated method of 'discovering' and 'searching' all available UART components in your PC and allowing the user to select the one that is connected to Bobcat camera. Bobcat search engine is not only finding the CamLink DLL port but also looking for any available COM port installed on the PC as well. It will then communicate with each port (.DLL and COM) and attempt to query the attached camera. If it finds an attached IMPERX Bobcat camera, it will read the 'camera type' information from the camera. Bobcat camera name will be displayed in the list box, which includes all DLLs, ports and cameras that it discovered. The user can then select the DLL/port/camera, of interest, by highlighting the entry and clicking on the 'OK' button. Clicking on the 'Rescan Ports' button causes the above discovery procedure to be repeated. Please note the frame grabber has to be Camera Link v1.0 (or later) compliant.

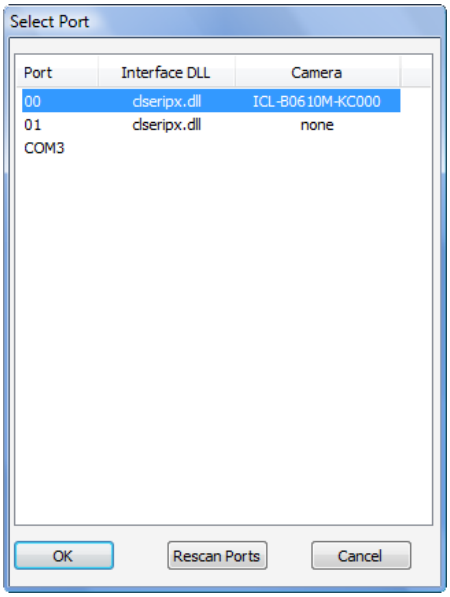

Figure 5.1 – Discovery procedure – select port

5.3 GRAPHICAL USER INTERFACE

After having selected the desired camera, the main Bobcat CamConfig dialog will appear – Figure 5.2 Advanced and Figure 5.2a Basic. The Graphical User Interface (GUI) is very intuitive and self-explanatory. To select Basic in View Menu selects GUI Level and then Basic this gives Figure 5.2a GUI or select Advanced gives GUI Figure 5.2. The basic features are:

1. **Compact Design** – small 140x400 (pixels) saves space when user displays image and control at the same time.
2. **Real Time Data** – updates camera information in real time while camera is working. Gives quick and general information about camera configuration status.
3. **Dockable Windows** – all configuration windows (Gain, AOI, Trigger…) can be separated and "docked" in the main GUI with just one click.
4. **Configurable** – user can customize the main menu by selecting the sub windows and also memorize the last setting.

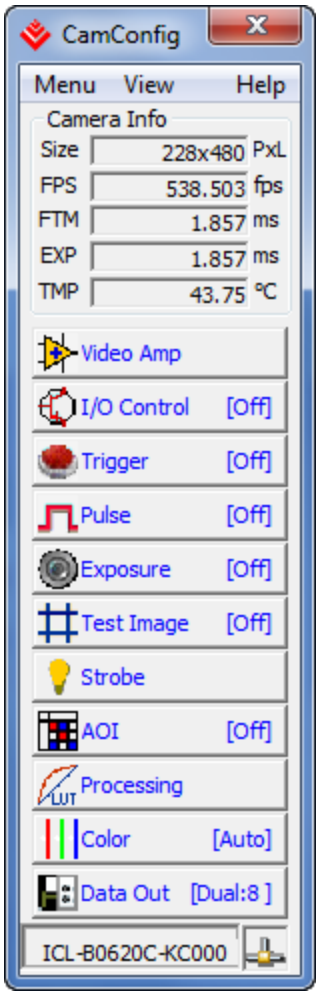

Figure 5.2 – CamConfig GUI Advanced

The configuration utility includes an interactive help file, which will guide you through the GUI controls and camera settings. On the main window, the user can see useful camera information – Current Image Size (Size), Number of Frame per second (FPS), the Frame Time (FTM), Exposure Time (EXP) and Temperature of the CCD sensor (TMP). Additional information can be obtained by clicking on the buttons shown in the CamConfig window, such as Video Amp, I/O Control, Trigger, etc. The bottom of the main utility window is camera name and status of Cam-link connection. If the connection between the camera and the computer is lost a red cross will appear above the connection icon.

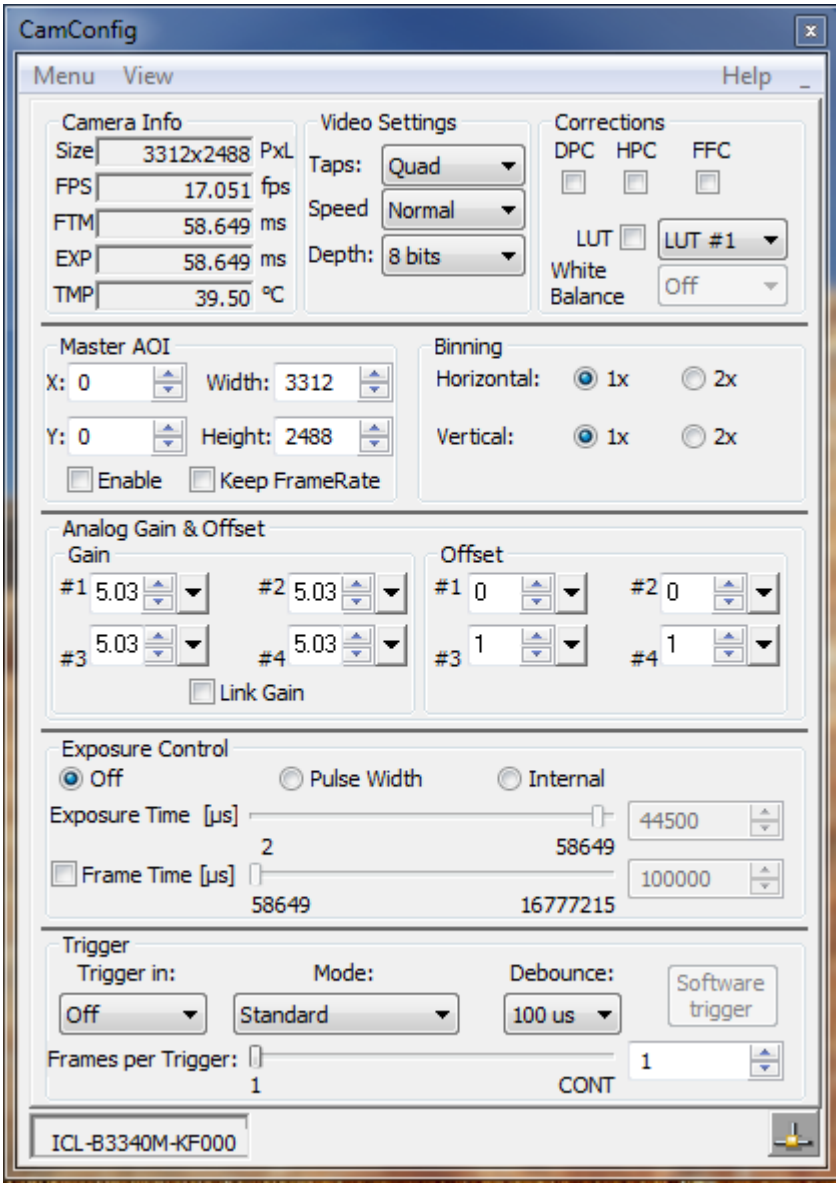

Figure 5.2a – CamConfig GUI Basic

5.4 MAIN GUI MENU

All panels in the Bobcat CamConfig share the same general control options and menus for "File", "View" and "Help" – Figure 5.3.

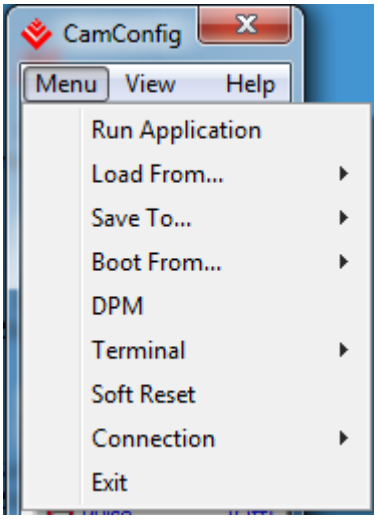

Figure 5.3 – Main Menu

Run Application: Select and starts another executable file (Frame-Grabber application, etc.…) that user normally uses. CamConfig will remember the path of last executable file that you used, so the next time when you start the application without having to type-in the location.

Load From: Loads the camera registers from a saved configuration space: File, Workspace, Factory Space, User Space #1 or User Space #2.

1. **File** – loads the camera registers from a saved configuration file
2. **Workspace** – updates the GUI with the current camera workspace settings
3. **Factory** – loads the camera registers with the original (factory) settings.
4. **User Space #1** – loads the camera registers with camera settings saved in the user space 1.
5. **User Space #2** – loads the camera registers with camera settings saved in the user space 2.

Save To: Saves the camera registers to File, User Space #1 or User Space #2. Factory Space is disabled for regular users and it is available only for manufacturing technicians.

1. **File** – saves the current camera settings to a configuration file
2. **Factory Space** – saves the current camera settings to the camera Factory space. This is restricted command and is disabled for regular users.
3. **User Space #1** – saves the current camera settings to the camera User space 1.
4. **User Space #2** – saves the current camera settings to the camera User space 2.

Boot: This menu selects the 'Boot From' source. Upon power up, the camera will load its registers from the selected 'Boot From' source: Factory, User #1 or User #2. Bobcat camera will be release with 'Factory" Setting and user can save and boot camera with their own configurable features.

DPM: Defect Pixel Map – When selected, the DPM window will show defected pixels location. The defective pixel map is stored in the camera's non-volatile memory and read out when running bad pixel correction – Figure 5.4. Defected pixels are categorized as:

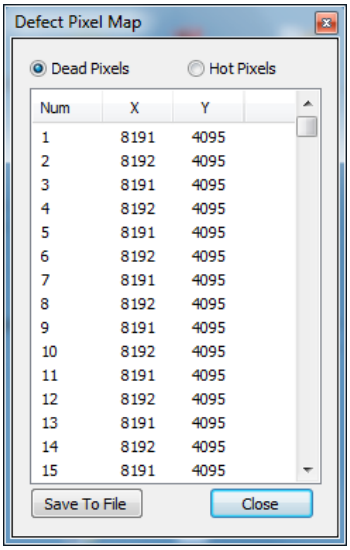

Figure 5.4 – Defective pixel map

1. **Dead Pixels** – pixels with sensitivity that deviates more than 15% due to fluctuations in the CCD manufacturing process.

2. **Hot Pixels** – pixels that during normal camera operation are normal, but in long integration modes (programmable frame time) behave as high-intensity bright pixels.

Terminal:

The user can display two submenus: Command Terminal and Download Terminal.

1. **Command Terminal** – shows information about all the commands sent to or received from the camera. User can type in Bobcat command directly in the text box provided – Figure 5.5. All commands must start with 0x followed by ADDRESS and DATA, without spaces – refer to chapter 4 for more information. The "Disable Polling" check box will turn on/off the polling commands (such as Frame Time, Exposure time, Frame Rate and Sensor Temperature) in the dialog windows. The user can change the polling time by entering the desired number in the window. If for some reason the camera returns an error, when command was sent to the camera, the GUI will respond with a pop-up window displaying an error message. The user has option to disable the error checking by enabling the "Disable Error Checking" box.

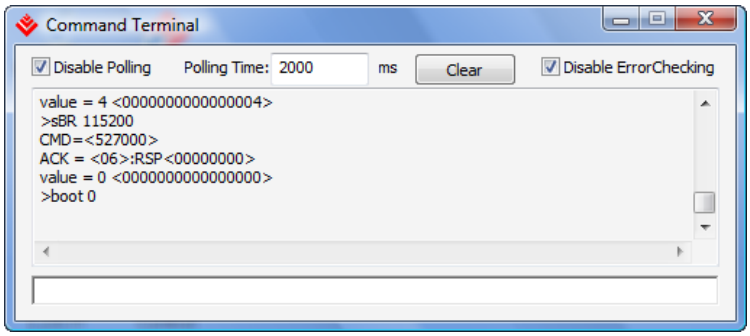

Figure 5.5 – Command terminal

2. **Download Terminal** – One of the great features in Bobcat configuration utility is download terminal. User can upgrade the camera firmware and up-load to the camera any custom LUT, DPM or FFC – Figure 5.6.

   A. File Type – from the pull-down menu the user can select the appropriate type of file to up-load to the camera.

   B. File Path – enter the file path manually into the edit box or click the '…' button to browse through folders.

   C. Load File – after selecting the file, click on "Load File" button to start the up-load process.

D. Cancel – stops the up-load process.

E. Progress Bar – displays the progress status of the up-load process.

F. Terminal window – provides information about the download process (completion, errors, etc.)

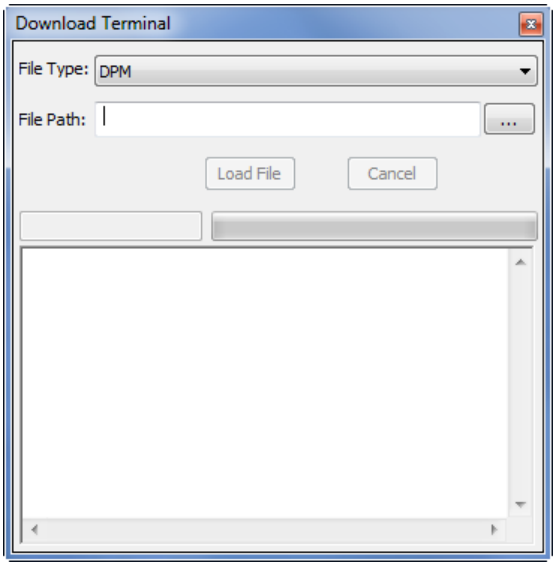

Figure 5.6 – Download terminal

Download Procedure:

1. Select correct 'File Type" before downloading. Several options are possible: DPM, HPM, LUT1, LUT2, Application FW, Register space.
2. Type in or select the correct data file of this feature in 'File Path'
3. Click on 'Load File' button to start downloading
4. Wait for the progress bar to finish (100%)
5. Reboot the camera and restart the GUI for the changes to take into effect.

Connection: The user can select the connection type between the camera and the computer:

1. Switch Port – If checked, "Select Port" window will popup. The user can select new CamLink port, which connect to current camera.

2. Set Baud Rate – the user can set the communication baud rate: 9600, 19200, 38400, 57600 or 115200 (default value).

Exit: Terminates the application.

5.5 VIEW GUI WINDOWS

The 'View' menu allows the user to select which camera parameter window to be displayed on the main CamConfig GUI window – Figure 5.7.

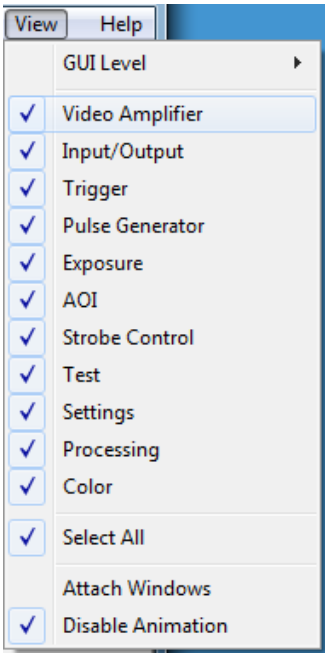

Figure 5.7 – View GUI Windows

Video Amplifier: Controls the camera analog and digital gain and offset, tap balancing, black level correction. Optional – controls RGB settings.

Input/output: Maps the internal input and output signals to the camera external inputs and outputs.

Trigger: Controls the camera triggering features.

Pulse Generator: Enables and controls the internal pulse generator.

Exposure: Sets the exposure, line and frame time, and AEC, AGC, AIC modes.

Test: Enables the internal test pattern generator.

AOI: Sets up to 8 regions of interest, and H and V binning modes.

Strobe: Enables and controls the camera strobe signals.

Processing: Enables the built-in basic image processing functions.

Color: Sets the gain and offset for the primary R G B colors. Sets the white balance mode. Displays WBC values.

Data Out (Settings): Sets for the data format – bit depth, bit shift, output format, camera speed, LVAL, FVAL size, and DPC, HPC, FFC controls.

Select All: Enables all camera parameter windows.

Attach Window: Attaches all camera parameter windows to the main GUI window.

Disable Animation: Disables animated features of windows preview when moving the mouse cursor over the buttons.

5.6 GUI HELP

The main "Help" menu is shown on Figure 5.8

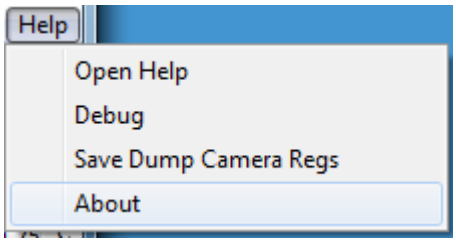

Figure 5.8 – Help menu

Open Help: Opens an interactive help file.

Debug: Puts the GUI in a debug mode for test purposes and troubleshooting.

About: Provides information about application version and important camera parameters such as Firmware revision, Assembly Part Number, etc. – Figure 5.9.

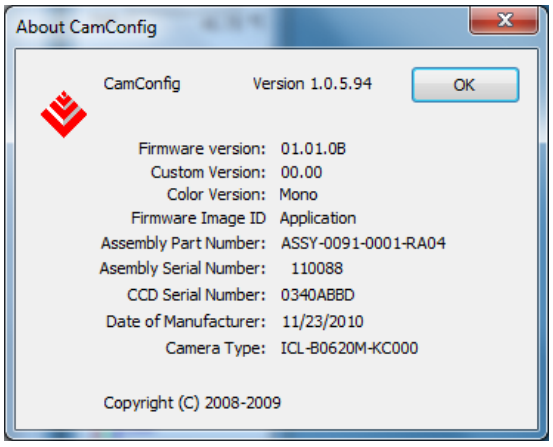

Figure 5.9 – About CamConfig.

5.7 PARAMETER WINDOWS

Bobcat Cameras have many features that can easily be programmed using the Bobcat graphical user interface (GUI) or via simple register commands using the Command Terminal. The main parameter windows are described below.

5.7.1 Video Amp

Video Amp window allows the user to adjust the Analog or Digital gain and offset. Manual entry and sliders are available for adjusting the individual parameters – Figure 5.10.

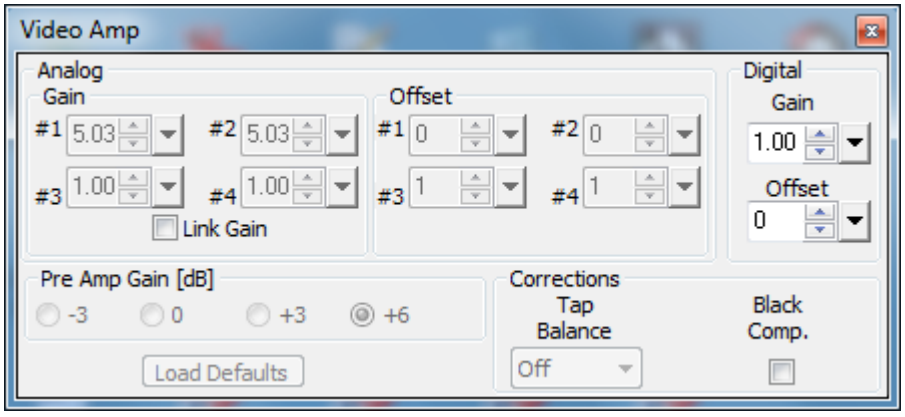

Figure 5.10 – Video Amp parameter window

Analog: The user can set the desired analog gain (0 to 36 dB, 1024 discrete values) and offset (0 to 1023, 1 step increment) for each channel via the sliders or by entering the desired values.
"Link Gain" and "Link Offset" links the corresponding channels together (dual tap camera only), and the gain or offset difference between them will be preserved.

Pre Amp Gain: The user can select the preamplifier gain for the camera (the same for both channels). Four options are possible: -3 dB, 0, +3 dB, and +6 dB. The default Pre-Amp Gain value is camera dependent and it is set for the best camera performance.

Digital: The user can set the desired digital gain (1.0x to 3.0x, 0.1x increment) and digital offset (-511 to +511, 1 step increment) via the slider or by entering the desired value. The selected value for gain or offset is applied to both channels.

Load Defaults: Loads the Manufacturing default gain and offset settings. The settings might be different for "Slow" and "Fast" modes.

Corrections: **Tap balance** – when selected enables automatic tap balancing. Four options are available – Off, Auto, Once, Static.
White balance – when selected enables automatic white balance. This feature is optional.
Black Comp – when selected enables "Black Compensation" and automatically determines and compensates for black level.

5.7.2 I/O Control

The camera has 2 external inputs and 2 external outputs. In addition to these inputs and outputs, the cameras with camera link output have two more inputs (CC1 and CC2) and one output (CL Spare) available. The user can map all available internal input and output signals to all external camera inputs and outputs – Figure 5.11.

Input: The user can map each of the camera inputs CC1, CC2, IN1 or IN2 to all available internal input signals. 5 signals are available for mapping. For each input, the user can set the signal level to active "High" or active "Low".

1. Computer trigger – maps CC1 or CC2 to the internal (CC) computer trigger input.
2. External Trigger – maps IN1 or IN2 to the external computer trigger input.

3. Exposure control – provides an external exposure control signal. For proper operation set the "Exposure Control Register" to "External".
4. H-Sync – synchronizes the camera line timing to the external pulse. A continuous trail of pulses (one for every line) must be provided. The camera uses only the pulse edge, but the duration should be as short as possible. Min. duration - 50 ns.
5. V-Sync – synchronizes the camera frame timing to the external pulse. A continuous trail of pulses (one for each frame) must be provided. The camera uses only the pulse edge, but the duration should be as short as possible. Min. duration - 2 us.
6. Deselect – no signal is mapped.

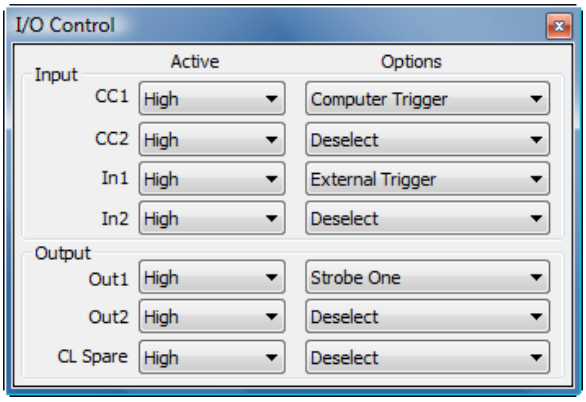

Figure 5.11 – I/O control parameter window

Output: The user can map each of the camera outputs to OUT1, OUT2 or CL Spare to all available internal output signals. 13 signals are available for mapping. For each input, the user can set the signal level to active "High" or active "Low".

1. Exposure Start – a short pulse (2 us) indicating the beginning of the camera exposure in trigger mode.
2. Exposure End – a short pulse (2 us) indicating the end of the camera exposure in trigger mode.
3. Mid Exposure – a short pulse (2 us) indicating indicates the middle of the camera exposure in trigger mode.
4. Active Exposure Window – a signal indicating the duration of the camera exposure in trigger mode.
5. H-Sync – a short pulse (2 us) synchronized with the camera line timing.
6. V-Sync – a short pulse (2 us) synchronized with the camera frame timing.

7. Odd/Even Frame Flag – a signal indicating if the frame is ODD or EVEN. It alternates every frame. When "Active High" ODD is LOW.
8. Trigger Pulse – maps the input trigger pulse to the output with no delay (as is).
9. Trigger Pulse Delayed – maps the input trigger pulse to the output with delay set by the Exposure Delay Register.
10. Camera Ready – a signal indicating when the camera is ready to accept the next trigger pulse.
11. Pulse Generator – maps the internal pulse generator waveform to the output.
12. Strobe 1 – maps "Strobe One" signal to the corresponding external output.
13. Strobe 2 – maps "Strobe Two" signal to the corresponding external output.
14. Deselect – no signal is mapped.

5.7.3 Trigger

Trigger window is used to set the camera trigger modes and trigger settings – Figure 5.12. Four control panels are associated with this feature: "Settings", "Acquisition Control", "Exposure control" and "Strobe Control".

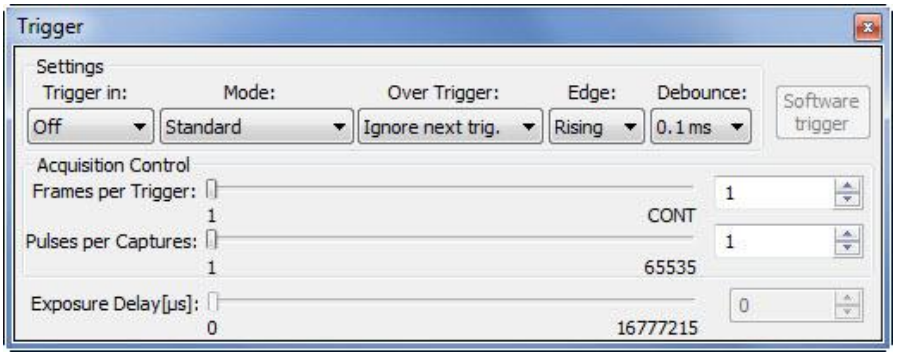

Figure 5.12 – Trigger parameter window

Settings: **Trigger in** – selects the active triggering input signal. The selected trigger signal must be mapped to the corresponding camera input.

1. Off – the camera is in free-running mode.
2. External – the camera expects a trigger signal coming from IN1 or IN2 inputs.
3. Pulse Gen – the camera expects a trigger signal coming from the internal pulse generator.

4. Computer – the camera expects a signal coming from CC1 or CC2 inputs.
5. Software – the "Software Trigger" button when pressed starts the triggering.

Mode – selects the desired triggering mode:

1. Standard – in this mode the camera exposes, reads-out the selected number of frames and waits for the next trigger signal. In this mode, the maximum camera frame rate is LESS than the free-running one.
2. Fast – in this mode the camera exposes then next frame while reading the previous. This mode provides the ability to trigger the camera with its original (free-running) frame rate.
3. Double – this mode is designed for capture fast processes with short exposure times, and is commonly used in particle velocity measurement. It is identical to the Standard mode but, the camera will capture only 2 frames after each trigger signal. There is no delay between the frames
4. Frame Accumulation – in this mode, after each trigger signal the camera starts integration then transfers the information to the vertical registers and then waits for the next trigger. After the last trigger has been received the information is being read out.
5. Asynchronous – in this mode the camera is free running prior to the trigger. When the trigger is applied, it resets the CCD timing, flushes the remaining lines and starts the integration.

Trigger Edge – the user can select the active triggering edge:

1. Rising – the rising edge is used for triggering.
2. Falling – the falling edge is used for triggering.

Trigger Overlap – the user can select how to handle the next trigger pulse if arrives while the previous triggering cycle is in process:

1. Ignore – the next trigger will be ignored, and the camera will continue its present operation.
2. Accept – the next trigger will be used.
3. Accept after Exposure – the next trigger will be ignored while the camera is exposing the image.

De-bounce – the trigger inputs are de-bounced to prevent multiple triggering from ringing triggering pulses. The user has eight choices of de-bounce interval:

1. **Off** – No de-bounce
2. **10.0** us – 10 microseconds de-bounce interval.
3. **50.0** us – 50 microseconds de-bounce interval.
4. **100.0** us – 100 microseconds de-bounce interval (default).
5. **500.0** us – 500 microseconds de-bounce interval.
6. **1.0** ms – 1 milliseconds de-bounce interval.
7. **5.0** ms – 5 milliseconds de-bounce interval.
8. **10.0** ms – 10 milliseconds de-bounce interval.

Acquisition: **Frames per trigger** – sets the number of frames captured after each trigger in "Standard" mode. The user can select from 1 to 65500 discrete frames to be captured. If the value is 65501 or bigger, the camera is free running after the trigger signal.

Pulses per capture – sets the number of trigger pulses used during a single acquisition event in "Frame Accumulation" mode. The user can select from 1 to 65535 discrete pulses.

Exposure Delay: Sets the delay between the trigger pulse active edge and beginning of the exposure. The user can set the delay from 0 to 16777215 us.

5.7.4 Pulse Generator

In this window, the user can configure the parameters of the Internal Pulse Generator – Figure 5.13.

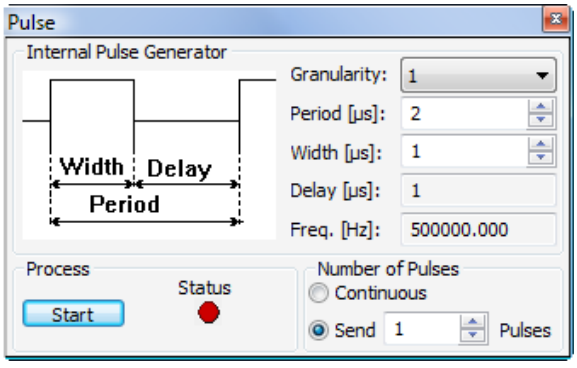

Figure 5.13 – Pulse generator window

Granularity: Sets the granularity for the internal counters. Granularity can be set to 1x, 10x, 100x or 1000x.

Period: Sets the pulse period in microseconds.

Width: Sets the pulse width in microseconds.

# of Pulses: Sets the number of pulses generated. Two modes are available:

1. Continuous – provides a continuous operation. To stop the process, you have to press the "Stop" button.
2. Fixed # of pulses – the user can set only a discrete number of pulses ranging (1 to 65500) to be generated. To stop the process, you have to press the "Stop" button. Otherwise, the process stops automatically after the last pulse is sent.

Process: **Start** – starts and stops the process of Internal Pulse Generator. When the process is in progress, the 'Start" button becomes a 'Stop" button.
Status – provides the status of the process:
Red – the process is on hold,
Green – the process is working.

5.7.5 Exposure

This window controls the camera exposure, line and frame time, AEC, AGC and AIC modes of operation – Figure 5.14.

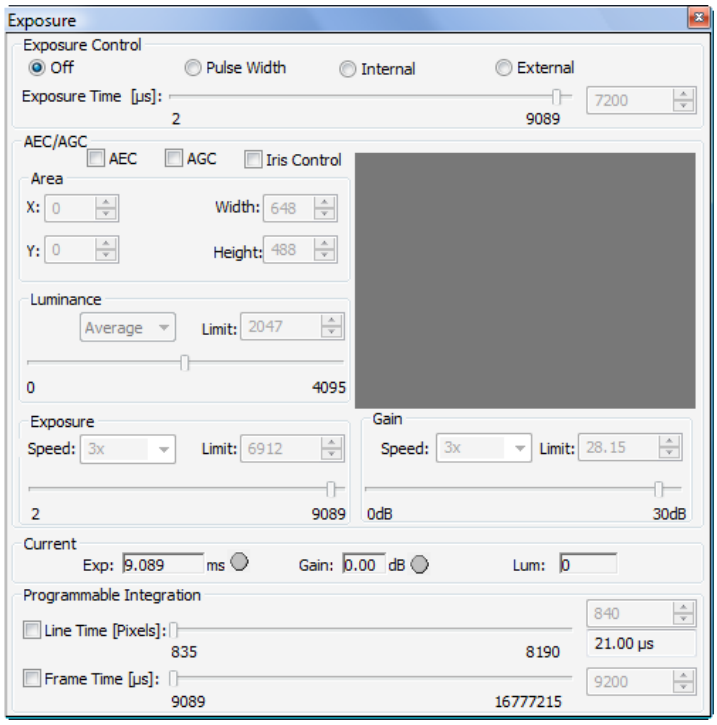

Figure 5.14 – Exposure control window

Exposure Control: Sets the camera exposure:

4. Off – no exposure control.
5. Pulse Width – the pulse width (duration) determines the exposure during triggering mode ONLY.
6. Internal – internal camera registers control the exposure.
7. External – external pulse mapped to the camera input controls the exposure.
8. Exposure time slider – sets the actual camera exposure in microseconds. The minimum exposure time adjusts accordingly, based on the camera mode of operation. The slider can only be used when "Internal" mode is enabled.

Programmable Integration: Variable line and frame rate mode provides the ability to run the camera in full resolution and at a frame rate slower than the nominal camera frame rate. The user can change "Line Time" in pixels or change "Frame Time" in microseconds. The maximum frame time is ~ 16 seconds.

AEC/AGC: The camera can be set to automatic exposure and gain control in order to keep the same image brightness during changing light conditions.

Enables – enables which feature to be used:

1. AEC – enables Automatic Exposure Control (AEC) mode. The user can change "Area", "Exposure" and "Luminance". "Gain" cannot be adjusted.
2. AGC – enables Automatic Gain Control (AGC) mode. The user can change "Area", "Gain" and "Luminance". "Exposure" cannot be adjusted.
3. AIC – enables Automatic Iris Control (AIC). The camera provides an analog video signal (via 12 pin HIROSE connector), compatible with "Video" iris lens control.

Area – sets an active region of significance. Only the image inside the selected region will be used in the data collection AEC/AGC algorithm. Any brightness changes outside of the region will be ignored. The changes as determined by the algorithm will apply to the entire image. The user can enter the region of significance by setting the active window size (Width, Height) and offset (X, Y). Image location (1.1) is top left corner. The user can set the desired window size by typing the numbers directly, or by selecting the desired size in the provided gray square window. To do this, simply draw the window with the mouse in the gray square.

Luminance – sets the desired luminance level to be maintained in the image. The comparison algorithm will adjust the image gain and exposure accordingly, so the image luminance is always close to the desired one. The user can select which luminance type to be used in the algorithm:

1. Average – the average value of the image luminance will be used in the comparison algorithm.
2. Peak – the peak luminance value (maximum luminance level) will be used in the comparison algorithm.

Exposure – sets the maximum exposure time, which can be reached in the AEC mode in order to avoid motion smear if a fast-moving object is monitored. The user can select the speed of convergence 1x (slow), 2x, 3x and 4x (fast).

Gain – sets the maximum analog gain, which can be reached in the AGC mode. The user can select the speed of convergence 1x (slow), 2x, 3x and 4x (fast).

Current – Provides live information about the current value of the Exposure time, Gain and Luminance. The values will be refreshed every time polling is done.

5.7.6 Test Image

This window sets the test image mode. Several test images are available for selection, including pattern superimposing over live image – Figure 5.15.

Ping: Checks the serial connection status of the camera:
GREEN – followed by a brief "OK", indicates a successful connection.
RED – followed by and "ERR", indicates no connection.
YELLOW – "Ping" command was sent to the camera. A few seconds after pinging, the indicator becomes gray and the message disappears.

Test Mode: **Test Patterns** – the camera can output eight test patterns:

1. Off – test mode is off.
2. Black – displays black image.
3. Gray Image – displays a uniform dark gray image.
4. White Image – displays a uniform white image.
5. H Ramp – displays a stationary horizontal ramp image.
6. V Ramp – displays a stationary vertical ramp image.
7. H Ramp move – displays a moving horizontal ramp image.
8. V Ramp move – displays a moving vertical ramp image.
9. Vertical Bars – displays a set of 8 vertical gray bars with different gray levels.

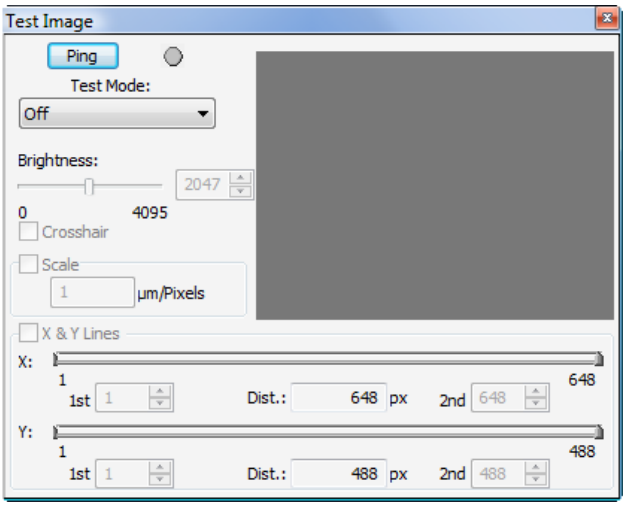

Figure 5.15 – Test image window

Superimposed: This mode superimposes a test pattern over live image (not available during H & V binning):
1. Crosshair – superimposes a cross, located in the center of the CCD images. A small cross will appear in the gray square window.

2. H&V Lines – superimposes a pair of H and/or V lines. Dual sliders are available to select the horizontal and vertical position of the lines. Each line location will be visible in the gray square window. The sliders range from 1 to the maximum number of pixels/lines available on the sensor.
3. Brightness – sets the brightness of the crosshair and H&V lines, ranges from 0 to 4095.
4. Scale – provides the ability to measure distance between the lines in pixels or in linear units. The uses must enter a scale calibration value.

5.7.7 Area of Interest (AOI)

AOI is used to select one or more regions of interest. A total of seven independent AOIs can be generated, and the user can select the size of each horizontal and vertical window. Horizontal and Vertical binning is also available to change the H and V resolution of the image – Figure 5.16.

Window: This sets the portion of the image, which will be displayed and used:

1. Normal – the imager has full resolution as determined by LVAL and FVAL settings.
2. Center – only a portion or center of the image will be used. This mode is camera dependent and is not available for all cameras.

Binning: This sets the camera H & V binning modes:

1. Horizontal – enables the horizontal binning – the image horizontal resolution is reduced by a factor of 1x, 2x, 3x, 4x or 8x (1x – no binning).
2. Vertical Horizontal – enables the vertical binning – the image vertical resolution is reduced by a factor of 1x, 2x, 3x, 4x or 8x (1x – no binning).

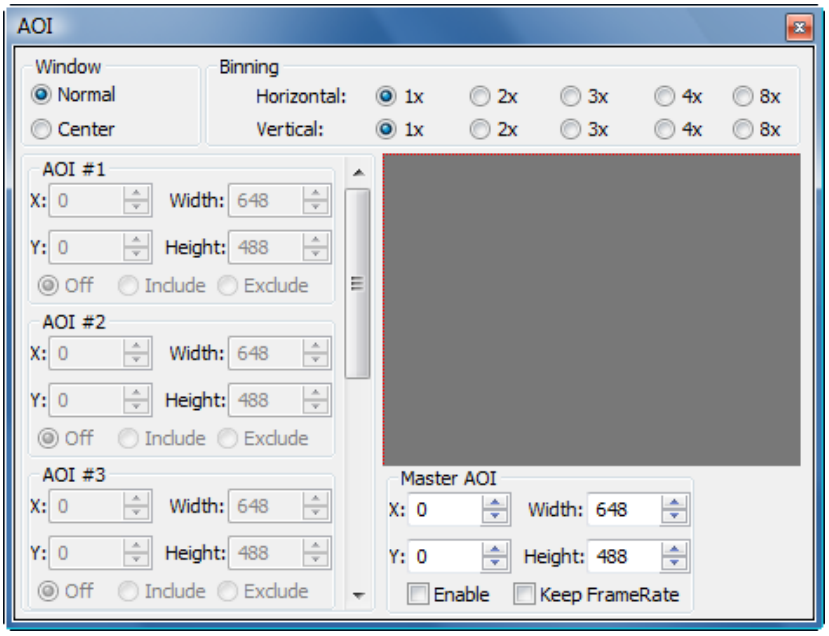

Figure 5.16 – AOI window.

Master AOI: Bobcat supports one Master AOI (MAOI). All other AOIs are slave and they have to be positioned within the MAOI. This MAOI can be enabled or disabled. When enabled, MAOI determined the current image size. DVAL is HIGH within the selected area. The camera frame rate is preserved or changed with "Keep Frame Rate" selection. When enabled the camera frame rate is preserved regardless of the AOI selection. When disabled, the frame rate is determined by the selected vertical height settings. If other AOIs are used, MAOI Must be enabled.

AOI #: Bobcat supports up to six slave independent horizontal and vertical regions of interest could be enabled. If slave AOIs is to be used MAOI MUST be enabled. All slave AOIs have to be positioned within the MAOI. The slave AOIs can be set to be included or excluded from the MAOI After enabling the selected AOI, the user can enter the desired region of interest by setting the active window size (Width, Height) and offset (X, Y). Image location (1.1) is top left corner. The user can set the desired window size by typing the numbers directly, or by selecting the desired size in the provided gray square window. To do this enable the window first, press the corresponding numerical number on the keyboard, and then draw the window with the mouse in the gray square. Different AOIs will be displayed with different colors.

5.7.8 Strobe Control

This window sets the camera strobe signals. Two independently controlled strobe signals are supported – Figure 5.17.

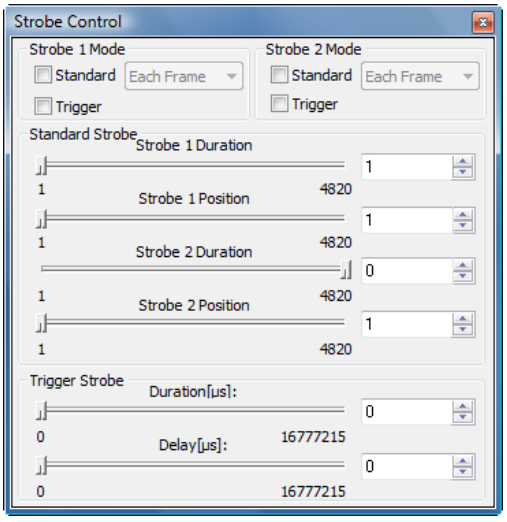

Figure 5.17 – Strobe Control window

Strobe 1 Mode: Sets the Strobe 1 mode of operation. The strobe can be disabled or enabled. When enabled the strobe can be set to appear "Each Frame", "Odd Frames" only or "Even Frames" only. In addition, in trigger mode, the user can add a strobe pulse associated with rising edge of the trigger pulse.

Strobe 2 Mode: Sets the Strobe 2 mode of operation. The strobe can be disabled or enabled. When enabled the strobe can be set to appear "Each Frame", "Odd Frames" only or "Even Frames" only. In addition, in trigger mode, the user can add a strobe pulse associated with rising edge of the trigger pulse.

Standard Strobe: Controls the strobe position and pulse duration for Strobe 1 and Strobe 2. The user can set the individual strobe position relative to the beginning of the frame, via the slider or by entering the desired value. The strobe pulse duration can be set for each strobe individually. The user can set the strobe position and duration within the camera frame period with 1 us resolution.

Trigger Strobe: Sets the duration and delay of a strobe sync pulse (with respect to the trigger pulse) sent to the camera output. The user can set the strobe duration and the delay from 0 to 16777215 us.

5.7.9 Color

This window sets the gain and offset for the primary R G B colors. Available only for B0610C, B1410C, and B1610C cameras. In addition, this window sets the White balance mode and displays the calculated white balance coefficients – Figure 5.18. This window will be disables for the Mono cameras.

White Balance: Sets the White balance mode of operation.

1. "Off" – No white balance is performed.
2. "Once" – the camera analyzes only one image frame, calculates only one set correction coefficients, and all subsequent frames are corrected with this set of coefficients.
3. "Auto" – the camera analyzes every frame, a set of correction coefficients are derived for each frame and applied to the next frame.
4. "Manual" – the camera uses the correction coefficients as entered from the user.

Manual WBC: User enters manually the white balance coefficients for each color. The range is from 0 to 4095 (255 is equal to 1.0x). The user has option to set all coefficients to "Zero".

Statistic: Displays the current (calculated) white balance coefficients per color.

RGB Gain: The user can set individually the desired digital gain for each primary color R G B (1.0x to 4.0x, 0.001x increment) via the slider or by entering the desired value. The user has option to set all gains to "Unity" (1.0x)

R G B Offset: The user can set individually the desired digital offset for each primary color R G B (-511 to +511, 1 step increment) via the slider or by entering the desired value. The user has option to set all offsets to "Zero".

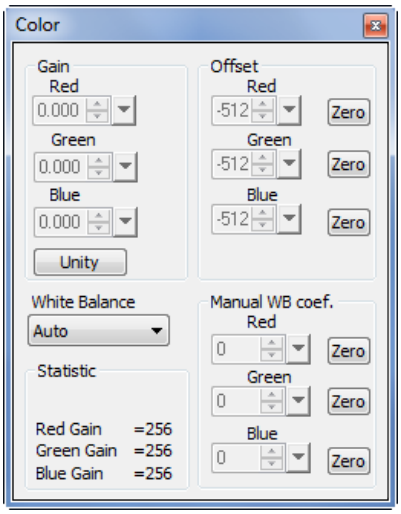

Figure 5.18 – Color window

5.7.10 Processing

This window controls the image processing features implemented into the camera. Currently only one Image Enhancement is implemented – Figure 5.19. More features will be added later. Please contact IMPERX for more information. This window will be disabled for the color cameras.

Processing AOI: **P**AOI is multi-functional. It can be enabled as:
Disabled – no PAOI functionality.
Processing ROI – the selected processing function will apply only to the selected ROI, all data outside of the region will not be processed with the selected function.
LUT ROI – the LUT function will apply only to the selected ROI, all data outside of the region will not be processed with the LUT function.

LUT: **LUT Enable** – enables the usage of the selected LookUp Table (LUT).

LUT Select – selects which of the two supported LUTs will be used. By default, LUT #1 is factory programmed with standard Gamma of 0.45. LUT #1 and LUT #2 can be reprogrammed by the user.

Image Enhancement: Enables the image enhancement processing features. Seven options are available:

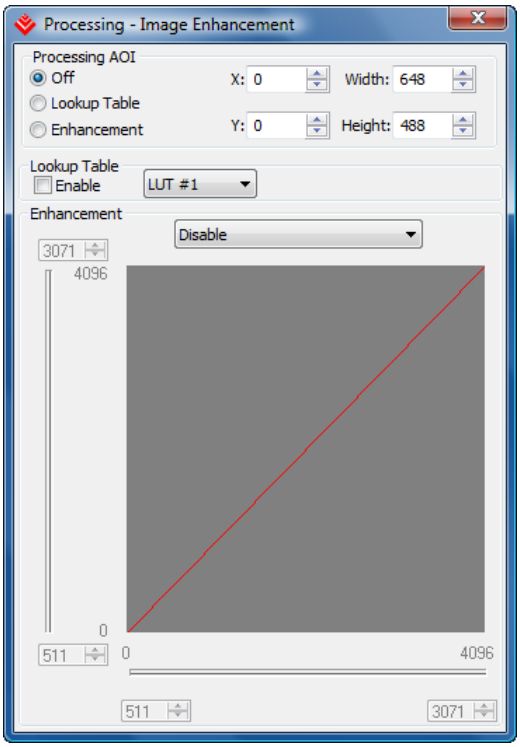

Figure 5.19 – Processing window

1. **Disable** – no enhancement operation will be performed.

2. **Single Threshold Binary** – single point threshold operation will be performed. Set the desired threshold level X1 using the horizontal (bottom) slider (left portion).
3. **Dual Threshold Binary** – two-point threshold operation will be performed. Set the desired upper threshold level X2 using the horizontal (bottom) slider (right portion), and the lower one X1 – horizontal (bottom) slider (left portion).
4. **Dual Threshold Gray** – two-point threshold operation with gray scale mid. values will be performed. Set the desired upper threshold level X2 using the horizontal (bottom) slider (left portion), and the lower one X1 – horizontal (bottom) slider (right portion).
5. **Dual Threshold Contrast Enhancement** – two-point threshold operation with gray scale stretch will be performed. Set the desired upper threshold level X2 using the horizontal (bottom) slider (left portion), and the lower one X1 – horizontal (bottom) slider (right portion).
6. **One Point Correction** – single point image enhancement operation will be performed. Set the desired X1-point level using the horizontal

(bottom) slider (left portion). Set the desired Y1-point level using the vertical (side) slider (bottom portion).

7. **Two Point Correction** – two-point image enhancement operation will be performed. Set the desired X1-point level using the horizontal (bottom) slider (left portion), and X2-point – the horizontal (bottom) slider (left portion). Set the desired Y1-point level using the vertical (side) slider (bottom portion), and Y2-point – the vertical (side) slider (top portion).

Side Slider: Multipurpose dual slider, controls the Y1 and Y2 positions for single and two-point image enhancement.

Bottom Slider: Multipurpose dual slider, controls the X1 and X2 positions for single and two-point image enhancement. Controls the lower and upper threshold levels for single and dual threshold.

Gray Box: Multipurpose graphical interface. The user can set the desired X1, (X1,X2), (X1,Y1) or (X2,Y2) points directly. Grab with the mouse the yellow dots (dot) and move them in the gray square window until the desired result is achieved.

5.7.11 Data Output

Data Output window provides full control of the camera digital data output – Figure 5.20.

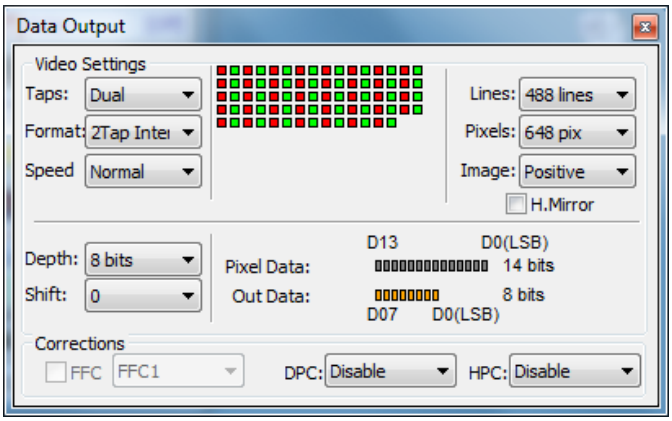

Figure 5.20 – Data output window

Video Settings: Sets the data format and camera speed. Refer to Chapter 2 for more information.

Taps – sets the number of image taps used in the current configuration. These are CCD taps, not output taps. In some cameras, the tap selection is not available:

1. Single – only one CCD tap is used, the CCD has only one tap, or one tap operation is available for dual tap CCDs.
2. Dual – two tap CCD operation, the CCD must support dual tap operation.
3. Quad – quad tap CCD operation, the CCD must support quad tap operation.

Format – sets the output data format, i.e. the number of output taps used and mapped to the camera link output. A graphical visualization of the selected output data format is shown in the center of the window:

1. 1 Tap Single – the output data is mapped to one tap only.
2. 2 Taps Interleaved – the output data is mapped to two taps in interleaved order.
3. 2 Taps Sequential – the output data is mapped to two taps in sequential order. This feature is optional.
4. 4 Taps Interleaved – the output data is mapped to four taps in interleave order.

Speed – controls the camera speed and frame rate. All camera features are available in both (Slow and Fast) modes.

1. Normal – normal camera operation.
2. Overclock – over-clocked camera operation. The camera speed (frame rate) significantly increases while preserving the image frame size noise and overall performance.

Lines – selects the size of the FVAL signal (valid lines in a frame) and provides "Full size" or "Active size" options. Two sizes (camera dependent) are available for selection.

Pixels – selects the size of the LVAL signal (valid pixels in a line) and provides "Full size" or "Active size" options. Two sizes (camera dependent) are available for selection.

Image – converts the image from positive to negative.

Bit Depth: Sets the camera bit depth, and which bits to be used in the data output.

Depth – sets the bit depth of the camera output to 8, 10, 12, 14 0r 3x8 bits. All internal camera processing is done in 14 bits. 14-bit output is available ONLY in 1 Tap Single data format.

Shift – selects which part of the entire 14-bit internal data will be mapped. This provides up to 7 bits digital shift left or right to manipulate camera brightness and contrast. A graphical visualization of the selected bits is shown in the center of the window

Corrections: **DPC** – enables Defective Pixel Correction (DPC). Each camera comes with a built-in Defective Pixel Map (DPM) to correct for defective pixels. The user can upload a custom DPM.

HPC – enables Hot Pixel Correction (HPC). Each camera comes with a built-in Hot Pixel Map (HPM) to correct for hot pixels. The user can upload a custom HPM

FFC – enables Flat Field Correction (FFC). Only big format CCD cameras (optical format of 1") have this feature. Each camera (when available) comes with a built-in Flat Field Map (FFM) to compensate for shading effect intrinsic to the imager. The user can upload a custom FFM.

5.7.12 Lens Control

Lens Control window provides full control of Zoom, Focus, and Iris motorized lens output control signals – Figure 5.21.

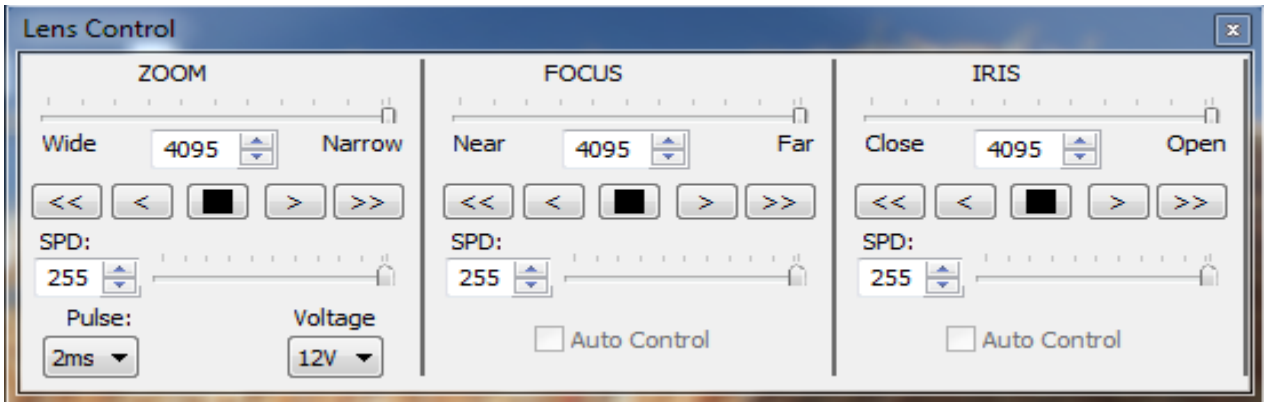

Figure 5.21 – Lens Control window

Zoom Slider/Entry Window: Sets the number of lens motor drive pulses to control motor travel distance. The settings range from 1 (minimum travel) to 4095 (maximum travel).

Zoom Buttons: << Sets full travel (4095 pulses) in Wide direction.
>> Sets full travel (4095 pulses) in Narrow direction.
< Sets Entry Window value in Wide direction
> Sets Entry Window value in Narrow direction.
■ Stops Motor.

Zoom SPD Slider/Entry Window: Sets the distance between lens motor drive pulses to control speed. The settings range from 1 (minimum speed) to 255 (maximum speed).

Focus Slider/Entry Window: Sets the number of lens motor drive pulses to control motor travel distance. The settings range from 1 (minimum travel) to 4095 (maximum travel).

Focus Buttons: << Sets full travel (4095 pulses) in Near direction.
>> Sets full travel (4095 pulses) in Far direction.
< Sets Entry Window value in Near direction.
> Sets Entry Window value in Far direction.
■ Stops Motor.

Focus SPD Slider/Entry Window: Sets the distance between lens motor drive pulses to control speed. The selection ranges from 1 (minimum speed) to 255 (maximum speed).

Iris Slider/Entry Window: Sets the number of lens motor drive pulses to control motor travel distance. The selections range from 1 (minimum travel) to 4095 (maximum travel).

Iris Buttons: << Sets full travel (4095 pulses) in Close direction.
>> Sets full travel (4095 pulses) in Open direction.
< Sets Entry Window value in Close direction.
> Sets Entry Window value in Open direction.
 Stops Motor.

Iris SPD Slider/Entry Window: Sets the distance between lens motor drive pulses to control speed. The selection ranges from 1 (minimum speed) to 255 (maximum speed).

Pulse: Sets pulse width to 1ms, 2ms, 4ms, or 8ms providing fine to coarse adjustments to help fine-tune control lens motor speed and travel distance.

.

Voltage: Sets motor driver pulse voltage to 6 or 12 volts.

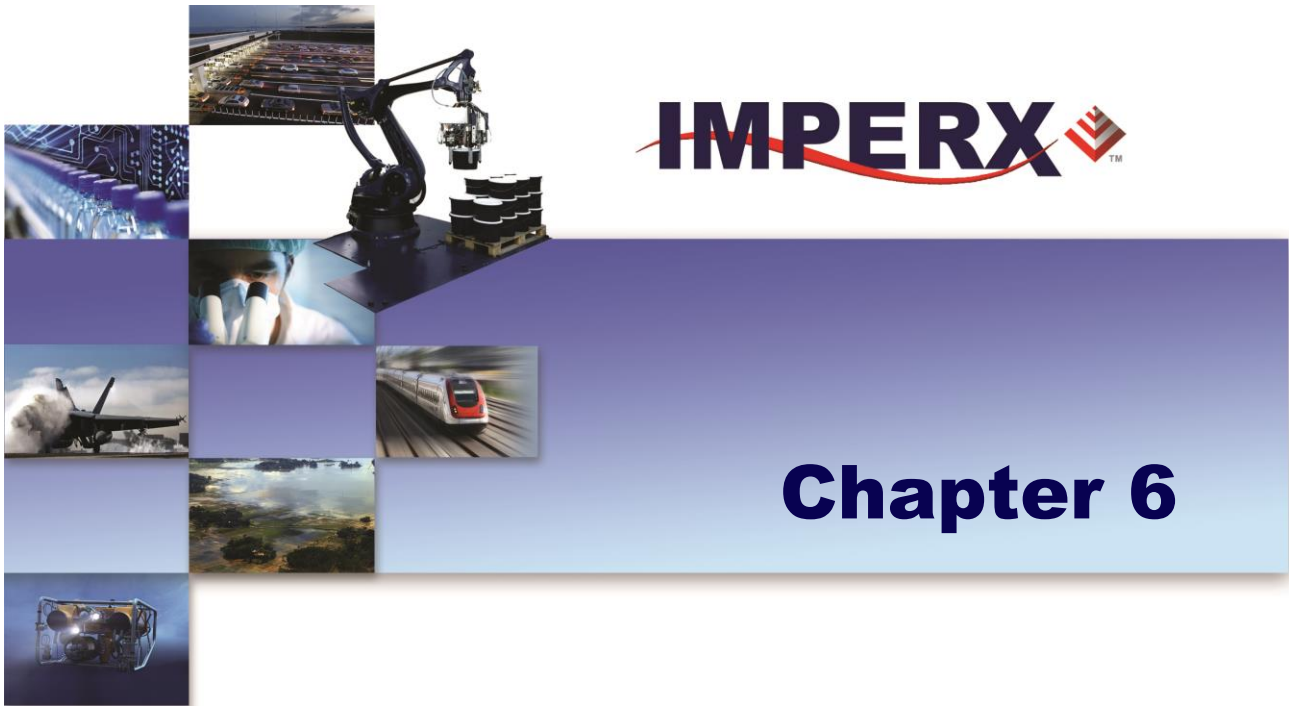

Gen<i>Cam Reference Manual

Quick reference guide to Gen<I>Cam standard

IMPERX
6421 Congress Ave.
Boca Raton, FL 33487
+1 (561) 989-0006

Rev. 2.1.1
9/26/2017
www.imperx.com

6.1 INTRODUCTION

The Bobcat series of GigE Vision cameras are fully compliant with the Gen<i>Cam standard. The cameras include an embedded camera description file (XML) that contains all of the information required to automatically map a camera's features to its internal registers. The Gen<i>Cam standard defines the syntax and semantics of the camera description file. It also defines a mechanism for the user to configure the camera by reading/writing the camera registers associated with the features.

The camera description file (XML) contains a set of nodes where each node represents a feature of the camera. Each node has a set of attributes that define the feature including a description, type (i.e. integer, Boolean, etc.), register address, minimum value, maximum value, increment, etc. All of this information is contained in the XML file. The XML file is transferred from the camera to the host application when a connection is first established. The host application then parses the XML file and presents the user with a "node tree' representation.

The Bobcat series of cameras include a full-featured host application, called PureGEV, which allows the user to connect to a camera, view/save images from the camera and control its features via a "node tree" user interface representation. Please refer to the PureGEV Quick Start Guide for details on how to install and use the PureGEV application.

A "node tree" is a tabular list of all of the camera features (that were described in the XML file). The user can control a feature by simply clicking on it with the mouse and editing the field. Some features provide drop down menu lists, while others support direct data entry. Features that are read-only (i.e. status indicators) are de-highlighted and un-editable. Some features depend on the state of other features. For example, the GainAutoBalance is only active if the SensorDigitizationTaps is equal to Two. Some features are locked while image streaming is active. For example, the PixelFormat feature can only be changed while images are not being streamed.

The following tables illustrate the node tree as it is displayed by the PureGEV application. For a detailed description of the features, please refer to Chapter 2.

6.2 NODE TREE

6.2.1 Device Information

DeviceInformation	
DeviceVendorName	Imperx, inc.
DeviceModelName	BobCat
DeviceManufacturerInfo	support: 1-561-989-0006 (00070601)
DeviceVersion	Version 1.0 (02.01.09)
DeviceUserID	
DeviceReset	{Command}

6.2.2 IP Engine

IPEngine	
IPEngineFirmwareVersionMajor	2
IPEngineFirmwareVersionMinor	1
IPEngineFirmwareVersionSubminor	9
IPEngineInitSequenceStatus	0
IPEngineVendorID	0
IPEngineDeviceID	7
IPEngineModuleID	6
IPEngineSubModuleID	1

6.2.3 GigE Vision Transport Layer

GigEVisionTransportLayer	
GevMACAddress	00:50:C2:1D:7B:B0
GevCurrentIPConfigurationLLA	True
GevCurrentIPConfigurationDHCP	True
GevCurrentIPConfigurationPersistentIP	True
GevCurrentIPAddress	169.254.48.105
GevCurrentSubnetMask	255.255.0.0
GevCurrentDefaultGateway	0.0.0.0
GevIPConfigurationStatus	PersistentIP

6.2.4 Image Size Control

ImageSizeControl	
AOI	
Slave_AOI1	
AOI1_Select	Off
AOI1_OffsetX	0
AOI1_Width	648
AOI1_OffsetY	0
AOI1_Height	488
Slave_AOI2	
Slave_AOI3	
Slave_AOI4	
Slave_AOI5	
Slave_AOI6	
SensorWidth	648
SensorHeight	488
SensorDigitizationTaps	Two
WidthMax	648
HeightMax	488
Width	648
Height	488
BinningHorizontal	x1
BinningVertical	x1
PixelFormat	Mono8
OffsetX	0
OffsetY	0
CameraSpeed	Normal
ConstantFrameRate	False
CenterScanMode	False
BitShift	NoShift
NegativeImage	False
ProgFrameTimeEnable	False
ProgFrameTimeAbs	4900
ProgLineTimeEnable	False
ProgLineTimeAbs	840
CurrentFrameRate	207

6.2.5 Acquisition and Trigger Controls

AcquisitionAndTriggerControls	
Acquisition	
AcquisitionMode	Continuous
AcquisitionStart	{Command}
AcquisitionStop	{Command}
AcquisitionFrameCount	1
Trigger	
TriggerMode	Off
TriggerSoftware	{Command}
TriggerSource	External
TriggerActivation	RisingEdge
TriggerOverlap	Off
TriggerType	Standard
TriggerDebounce	OneHundredMicroSeconds
TriggerNumFrames	1
TriggerNumPulses	1
Exposure	
ExposureMode	Off
ExposureTimeRaw	3850
CurrentExposure	4820
MaxExposure	4820

6.2.6 Counters and Timers Controls

CountersAndTimersControls	
TimerSelector	Timer1
TimerGranularityFactor	0
TimerPeriod	153630 ns
TimerFrequency	6509.15 Hz
TimerDurationRaw	4096
TimerDelayRaw	1024
TimerTriggerSource	Continuous
TimerTriggerActivation	RisingEdge
Timer1Polarity	ActiveHigh
Timer1Selector	TimerTrigger
Timer2Polarity	ActiveHigh
Timer2Selector	None

6.2.7 Analog Controls

AnalogControls	
Gain	
GainSelector	AnalogTap1
GainAutoBalance	Off
GainRaw	143
Offset	
BlackLevelSelector	AnalogTap1
BlackLevelAutoBalance	Off
BlackLevelRaw	0
PreAmp	
PreAmpSelector	AnalogTap1
PreAmpRaw	plus6dB

6.2.8 Test Mode

TestMode	
TestImageSelector	Off
SuperImposeLinesEnable	{Not available}
SuperImposeCrossEnable	{Not available}
SuperImposeIntensity	2047
SuperImposeLineH1	1
SuperImposeLineH2	488
SuperImposeLineV1	1
SuperImposeLineV2	648

6.2.9 User Sets

UserSets	
UserSetSelector	Default
UserSetLoad	{Command}
UserSetSave	{Not available}
UserSetDefaultSelector	Default
UserSetLastLoaded	Default

6.2.10 Custom Features

CustomFeatures	
ImageProcessing	
ProcessingAOI	
ProcessingAOI_Select	Off
ProcessingAOI_OffsetX	0
ProcessingAOI_Width	648
ProcessingAOI_OffsetY	0
ProcessingAOI_Height	488
LUT	
LUTSelector	LUT1
LUTEnable	False
ImageEnhancement	
EnhancementMode	Disabled
EnhancementPointX1	511
EnhancementPointX2	3071
EnhancementPointY1	511
EnhancementPointY2	3071
Strobe	
TrgStrobeMode	Off
TrgStrobeDelay	0
TrgStrobeDuration	200
StdStrobe1Mode	EachFrame
StdStrobe1Duration	200
StdStrobe1Position	20
StdStrobe2Mode	Off
StdStrobe2Duration	200
StdStrobe2Position	20

Custom Features (cont.)

AutoGainAndAutoExposure	
Controls	
AutoIris	False
AgcEnable	False
AgcLimit	800
AgcSpeed	x3
AecEnable	False
AecLimit	3800
AecSpeed	x3
AgcAecLuminanceLevel	2047
AgcAecLuminanceType	Average
AgcAecOffsetX	0
AgcAecWidth	648
AgcAecOffsetY	0
AgcAecHeight	488
Status	
CurrentAgcGain	{Not available}
CurrentAecExposure	{Not available}
CurrentAvgOrPeakLuminance	723
AgcMinLimitReached	False
AgcMaxLimitReached	False
AecMinLimitReached	False
AecMaxLimitReached	False
Temperature	
CurrentTemperature	154
VersionInfo	
FirmwareImage	0xA
FirmwareVersion	0x10005
BuildVersion	0

Custom Features (cont.)

IO	
IN1	
IN1Polarity	ActiveHigh
IN1Selector	ExternalTrigger
IN2	
IN2Polarity	ActiveHigh
IN2Selector	None
OUT1	
OUT1Polarity	ActiveHigh
OUT1Selector	Strobe1
OUT2	
OUT2Polarity	ActiveHigh
OUT2Selector	None
DataCorrection	
DefectPixelCorrection	False
HotPixelCorrection	False
PulseGenerator	
PulseGenEnable	False
PulseGenGranularity	x1
PulseGenWidth	1
PulseGenPeriod	2
PulseGenNumPulses	1



BOBCAT Warranty and Support

7.1 ORDERING INFORMATION

Bobcat Camera Ordering Codes — **Sample Code: IGV-B0610C-TC399**

Interface: IGV	Camera Number: B0610	Optical format	Sensor Type: C	Sensor Manuf.	Lens Mount: C	Filter Option: 3	Misc.: xx
ICL - CameraLink	B0610 - 648 x 488 @ 110fps (Truesense CCD)	C mount 1/3"	M - Monochrome	T - Truesense	C - C Mount	0 - None	99 - RS232 port (IGV only)
CLB - CameraLink(base)	B0620 - 648 x 488 @ 260fps (Truesense CCD)	C mount 1/3"	C - Color	S - Sony	F - F Mount	1 - No IR Filter (Color Cameras come with IR Filter)	
CLM - CameraLink(med)	B1020 - 1032 x 1032 @ 60fps (Truesense CCD)	C mount 1/2"	T - Truesense		S - CS Mount	2 - With IR Filter (Mono Cameras come without IR Filter)	
IGV - Geg E Vision	B1040 - 1032 x 1032 @ ? fps (Truesense CCD)	C mount 1/2"	W - VS(Glassless) with micro lens		B - Birger Mount	3 - With Clear Cover Glass	
GEV - Geg E Vision	B1310 - 1296 x 966 @ 26fps (Sony CCD)	C mount 1/3"	U - UV (Glassless) without micro Lens		T - T Mount	4 - Mounted Cover Glass to Custom base onto Sensor	
ICX - Coax Xpress	B1320 - 1320 x 736 @ 68fps (Truesense CCD)	C mount 1/2"	X - UV Quartz without Micro lens		M - M42 Screw Mount		
	B1340 - 1320 x 736 @ ? Fps (Truesense CCD)	C mount 1/2"	Q - Quartz		R - Rodenstock Mount		
	B1410 - 1392 x 1040 @ 23fps (Sony CCD)	C mount 2/3"	D - Deep UV (KAI 2020 only)				
	B1411 - 1392 x 1040 @ 24fps (Sony CCD)	C mount 1/2"					
	B1610 - 1628 x 1236 @ 17fps (Sony CCD)	C mount 1/1.8"					
	B1620 - 1608 x 1208 @ 35fps (Truesense CCD)	C mount 1.0"					
IGV/GEV Output Interface not available on the followinf models: B1040, B1340, B1641, B1941, B1942, B2340, B3340, B4841, B4842, B6640	B1621 - 1632 x 1232 @ 34fps (Truesense CCD)	C mount 2/3"					
	B1641 - 1632 x 1232 @ ? fps (Truesense CCD)	C mount 2/3"					
	B1920 - 1928 x 1084 @ 33fps (Truesense CCD)	C mount 1.0"					
	B1921 - 1952 x 1112 @ 32fps (Truesense CCD	C mount 2/3"					
	B1941 - 1952 x 1112 @ 62fps (Truesense CCD	C mount 2/3"					
	B1922 - 1940 x 1460 @ 20fps (Truesense CCD	C mount 2/3"					
	B1942 - 1940 x 1460 @ 40fps (Truesense CCD	C mount 2/3"					
	B2020 - 2056 x 2060 @ 16fps (Truesense CCD)	C mount 1.3"					
	B2320 - 2352 x 1768 @ 16fps (Truesense CCD)	C mount 1.0"					
	B2340 - 2352 x 1768 @ ? fps (Truesense CCD)	C mount 1.0"					
	B2510 - 2456 x 2058 @ 6.5fps (Sony CCD)	C mount 2/3"					
	B2520 - 2456 x 2058 @ 11fps (Sony CCD)	C mount 2/3"					
	B3320 - 3312 x 2488 @ 4 fps (Truesense CCD)	F mount 4/3"					
	B3340 - 3312 x 2488 @ 17fps (Truesense CCD)	F mount 4/3"					
	B4020 - 4032 x 2688 @ 5.0fps (Truesense CCD)	F mount 43.3mm					
	B4820 - 4904 x 3280 @ 3.2fps (Truesense CCD)	F mount 43.3mm					
	B4821 - 4920 x 3280 @ 3.1fps (Truesense CCD)	F mount 32.36mm					
	B4841 - 4920 x 3280 @ 6.6fps (Truesense CCD)	F mount 32.36mm					
	B4822 - 4880 x 3256 @ 3.0fps (Truesense CCD)	F mount 43.20mm					
	B4842 - 4880 x 3256 @ 5.9fps (Truesense CCD)	F mount 43.20mm					
	B6620 - 6576 x 4384 @ 1.8fps (Truesense CCD)	F mount 43.3mm					
	B6640 - 6576 x 4384 @ 3.5fps (Truesense CCD)	F mount 43.3mm					

Ordering Notes:
All Bobcat CCD cameras use Interline Transfer CCD
Power supply purchased separately
includes BNC's for TTL Trigger In and Strobe Out TTL
PS12V04 12 VDC power supply (CL or GEV)
PS12V04-B 12 VDC power supply
comes with RS232 DB9, Lens power 12VDC (GEV)
PS12V05 Auto Iris Video Type (CL or GEV)
F mount are Nikon, can use 35mm lens for most applications.
C mount 1 /1.8" is about 8.923mm diagonal.

NOTE: For any other custom camera configurations, please contact IMPERX, Inc.

7.2 TECHNICAL SUPPORT

Each camera is fully tested before shipping. If for some reason the camera is not operational after power up please check the following:

1. Check the power supply and all I/O cables. Make sure that all the connectors are firmly attached.

2. Check the status LED and verify that it is steady ON, if not – refer to the LED section.

3. Enable the test mode and verify that the communication between the frame grabber and the camera is established. If the test pattern is not present, power off the camera, check all the cabling, frame grabber settings and computer status.

4. If you still have problems with the camera operation, please contact technical support at:

Email: support@IMPERX.com
Toll Free 1 (866) 849-1662 or (+1) 561-989-0006
Fax: (+1) 561-989-0045
Visit our Web Site: www.IMPERX.com

7.3 WARRANTY

IMPERX warrants performance of its products and related software to the specifications applicable at the time of sale in accordance with IMPERX's standard warranty, which is 2 (two) years parts and labor. **FOR GLASSLESS CAMERAS THE CCD IS NOT COVERED BY THE WARRANTY.**

Do not open the housing of the camera. Warranty voids if the housing has been open or tampered.

IMPORTANT NOTICE

This camera has been tested and complies with the limits of Class A digital device, pursuant to part 15 of the FCC rules.

Copyright © 2013 IMPERX Inc. All rights reserved. All information provided in this manual is believed to be accurate and reliable. No responsibility is assumed by IMPERX for its use. IMPERX reserves the right to make changes to this information without notice. Redistribution of this manual in whole or in part, by any means, is prohibited without obtaining prior permission from IMPERX. IMPERX reserves the right to make changes to its products or to discontinue any product or service without notice, and advises its customers to obtain the latest version of relevant information to verify, before placing orders, that the information being relied on is current.

IMPERX PRODUCTS ARE NOT DESIGNED, INTENDED, AUTHORIZED, OR WARRANTED TO BE SUITABLE FOR USE IN LIFE-SUPPORT APPLICATIONS, DEVICES OR SYSTEMS OR OTHER CRITICAL APPLICATIONS, WHERE MALFUNCTION OF THESE PRODUCTS CAN REASONABLY BE EXPECTED TO RESULT IN PERSONAL INJURY. IMPERX CUSTOMERS USING OR SELLING THESE PRODUCTS FOR USE IN SUCH APPLICATIONS DO SO AT THEIR OWN RISK AND AGREE TO FULLY INDEMNIFY IMPERX FOR ANY DAMAGES RESULTING FROM SUCH IMPROPER USE OR SALE.



Camera Configuration Reference

Quick reference to the camera configuration workspace registers

A.0 ABBREVIATIONS

RW – read/write, **RO** – read only, **WO** – write only
MAX_HRZ_SZE, MIN_HRZ_SZE – Max. and Min. horizontal image size – camera dependent
MAX_VER_SZE, MIN_VER_SZE – Max. and Min. vertical image size – camera dependent
LIN_TIM_MIN – Minimum Line time – camera dependent
FRM_TIM_MIN – Minimum Frame time – camera dependent
FRM_TIM_ACT – Actual Current Frame time - variable
FRR_EXP_MIN – Minimum Exposure time – camera dependent

A.1 SAVING AND RESTORING REGISTERS

Address	Register Name	Type	Usage	MIN Value	MAX Value
0x6000	Boot From	RW	00 - Factory, 01 - User 1, 10 - User 2	0x00000000	0x00000002
0x6060	Load From Factory	WO	Command	0x00000000	
0x6064	Load From User1	WO	Command	0x00000000	
0x6068	Load From User2	WO	Command	0x00000000	
0x606C	Load MFG Default Gain	WO	Command	0x00000000	
0x6074	Save to User1	WO	Command	0x00000000	
0x6078	Save to User2	WO	Command	0x00000000	
0x0604	RS-232 Baud Rate Selector	RW	<BAUD Value>	0x00000000	0x00000004

A.2 CAMERA INFORMATION REGISTERS

Address	Register Name	Type	Value
0x6004	Firmware Revision	RO	<Firmware Revision>
0x6008	Firmware Build Number	RO	<Firmware Build Number>
0x600C	Test Register	RW	0x76543210
0x601C	Soft Reset	WO	0xDEDBEEF
0x6080	Horizontal Frame Size	RO	<MAX_HRZ_SZE, MIN_HRZ_SZE>
0x6084	Vertical Frame Size	RO	<MAX_VER_SZE, MIN_VER_SZE>
0x6088	Current Minimum Frame Time	RO	<FRM_TIM_MIN>
0x608C	Current Minimum Line Time	RO	<LIN_TIM_MIN>, <CLK_PER_PSC>
0x6090	Current Maximum Exposure	RO	<FRM_TIM_ACT>
0x6094	Current Minimum Exposure	RO	<FRR_EXP_MIN>
0x6098	Current Frame Number	RO	<Current Frame Number>
0x609C	Current Camera Exposure	RO	<Current Exposure>
0x60A0	Current Frame Duration	RO	<FRM_TIM_ACT>
0x60B0	Current Image Size	RO	<CURT_VER_SZE>, <CRNT_HRZ_SZE>
0x60B4	Current AEC/AGC Status	RO	<Status Values>
0x6010	CCD Temperature	RO	<Current CCD Temperature>

A.3 IMAGE SIZE (AOI) REGISTERS

Address	Register Name	Type	Usage	MIN Value	MAX Value
0x0500	Vertical Binning Mode	RW	0x0 - 1x, 0x1 - 2x, 0x2 - 3x, 0x3 - 4x, 0x4 - 8x	0x00000000	0x00000004
0x0200	Constant Frame Rate	RW	1 - Enable, 0 - Disable	0x00000000	0x00000001
0x0204	Horizontal Binning Mode	RW	0x0 - 1x, 0x1 - 2x, 0x2 - 3x, 0x3 - 4x, 0x4 - 8x	0x00000000	0x00000004
0x0208	MAOI Enable	RW	0 – Off, 1 - Enable	0x00000000	0x00000001
0x020C	AOI 1 Enable	RW	00 – Off, 01 – Include, 10 - Exclude	0x00000000	0x00000001
0x0210	AOI 2 Enable	RW	00 – Off, 01 – Include, 10 - Exclude	0x00000000	0x00000001
0x0214	AOI 3 Enable	RW	00 – Off, 01 – Include, 10 - Exclude	0x00000000	0x00000001
0x0218	AOI 4 Enable	RW	00 – Off, 01 – Include, 10 - Exclude	0x00000000	0x00000001
0x021C	AOI 5 Enable	RW	00 – Off, 01 – Include, 10 - Exclude	0x00000000	0x00000001
0x0220	AOI 6 Enable	RW	00 – Off, 01 – Include, 10 - Exclude	0x00000000	0x00000001
0x0224	PAOI Enable	RW	00 - Off, 11 – LUT AOI 10 – Process. AOI,	0x00000000	0x00000003
0x0228	MAOI Horizontal Width	RW	<Width Value>	0x00000001	MAX_HRZ_SZE
0x022C	AOI 1 Horizontal Width	RW	<Width Value>	0x00000001	MAX_HRZ_SZE
0x0230	AOI 2 Horizontal Width	RW	<Width Value>	0x00000001	MAX_HRZ_SZE
0x0234	AOI 3 Horizontal Width	RW	<Width Value>	0x00000001	MAX_HRZ_SZE
0x0238	AOI 4 Horizontal Width	RW	<Width Value>	0x00000001	MAX_HRZ_SZE
0x023C	AOI 5 Horizontal Width	RW	<Width Value>	0x00000001	MAX_HRZ_SZE
0x0240	AOI 6 Horizontal Width	RW	<Width Value>	0x00000001	MAX_HRZ_SZE
0x0244	PAOI Horizontal Width	RW	<Width Value>	0x00000001	MAX_HRZ_SZE
0x0248	MAOI Horizontal Offset	RW	<Offset Value>	0x00000000*1	MAX_HRZ_SZE - 1
0x024C	AOI 1 Horizontal Offset	RW	<Offset Value>	0x00000000	MAX_HRZ_SZE - 1
0x0250	AOI 2 Horizontal Offset	RW	<Offset Value>	0x00000000	MAX_HRZ_SZE - 1
0x0254	AOI 3 Horizontal Offset	RW	<Offset Value>	0x00000000	MAX_HRZ_SZE - 1
0x0258	AOI 4 Horizontal Offset	RW	<Offset Value>	0x00000000	MAX_HRZ_SZE - 1
0x025C	AOI 5 Horizontal Offset	RW	<Offset Value>	0x00000000	MAX_HRZ_SZE - 1
0x0260	AOI 6 Horizontal Offset	RW	<Offset Value>	0x00000000	MAX_HRZ_SZE - 1
0x0264	PAOI Horizontal Offset	RW	<Offset Value>	0x00000000	MAX_HRZ_SZE - 1
0x0268	MAOI Vertical Height	RW	<Height Value>	0x00000001	MAX_VER_SZE
0x026C	AOI 1 Vertical Height	RW	<Height Value>	0x00000001	MAX_VER_SZE
0x0270	AOI 2 Vertical Height	RW	<Height Value>	0x00000001	MAX_VER_SZE

0x0274	AOI 3 Vertical Height	RW	<Height Value>	0x00000001	MAX_VER_SZE
0x0278	AOI 4 Vertical Height	RW	<Height Value>	0x00000001	MAX_VER_SZE
0x027C	AOI 5 Vertical Height	RW	<Height Value>	0x00000001	MAX_VER_SZE
0x0280	AOI 6 Vertical Height	RW	<Height Value>	0x00000001	MAX_VER_SZE
0x0284	PAOI Vertical Height	RW	<Height Value>	0x00000001	MAX_VER_SZE
0x0288	MAOI Vertical Offset	RW	<Offset Value>	0x00000000	MAX_VER_SZE - 1
0x028C	AOI 1 Vertical Offset	RW	<Offset Value>	0x00000000	MAX_VER_SZE - 1
0x0290	AOI 2 Vertical Offset	RW	<Offset Value>	0x00000000	MAX_VER_SZE - 1
0x0294	AOI 3 Vertical Offset	RW	<Offset Value>	0x00000000	MAX_VER_SZE - 1
0x0298	AOI 4 Vertical Offset	RW	<Offset Value>	0x00000000	MAX_VER_SZE - 1
0x029C	AOI 5 Vertical Offset	RW	<Offset Value>	0x00000000	MAX_VER_SZE - 1
0x02A0	AOI 6 Vertical Offset	RW	<Offset Value>	0x00000000	MAX_VER_SZE - 1
0x02A4	PAOI Vertical Offset	RW	<Offset Value>	0x00000000	MAX_VER_SZE - 1

*[1] In B1920 the minimum "Horizontal Offset" is 10 pixels when "Constant Frame Rate" is disabled.

A.4 EXPOSURE CONTROL REGISTERS

Address	Register Name	Type	Usage	MIN Value	MAX Value
0x0544	Exposure Control Mode	RW	00 - Off, 01 - PW, 10 - Int, 11 - Ext	0x00000000	0x00000003
0x0548	Exposure Time	RW	<Exposure Value>	FRR_EXP_MIN,	FRM_TIM_ACT
0x054C	Prog. Line Time Enable	RW	1 - Enable, 0 - Disable	0x00000000	0x00000001
0x0550	Prog. Frame Time Enable	RW	1 - Enable, 0 - Disable	0x00000000	0x00000001
0x0554	Line Time	RW	<Line Time Value>	LIN_TIM_MIN	0x00001FFF
0x0558	Frame Time	RW	<Frame Time Value>	FRM_TIM_MIN	0x00FFFFFF

A.5 VIDEO REGISTERS

Address	Register Name	Type	Usage	MIN Value	MAX Value
0x0000	PreAmp Gain Ch. 1	RW	00 - -3dB, 01 - 0dB, 10 - +3db, 11 - +6db	0x00000000	0x00000003
0x0004	Analog Gain Ch. 1	RW	<Analog Gain Value>	0x00000000	0x000003FF
0x0008	Analog Offset Ch. 1	RW	<Analog Offset Value>	0x00000000	0x000003FF
0x0010	PreAmp Gain Ch. 2	RW	00 - -3dB, 01 - 0dB, 10 - +3db, 11 - +6db	0x00000000	0x00000003
0x0014	Analog Gain Ch. 2	RW	<Analog Gain Value>	0x00000000	0x000003FF
0x0018	Analog Offset Ch. 2	RW	<Analog Offset Value>	0x00000000	0x000003FF
0x0020	PreAmp Gain Ch. 3	RW	00 - -3dB, 01 - 0dB, 10 - +3db, 11 - +6db	0x00000000	0x00000003
0x0024	Analog Gain Ch. 3	RW	<Analog Gain Value>	0x00000000	0x000003FF
0x0028	Analog Offset Ch. 3	RW	<Analog Offset Value>	0x00000000	0x000003FF

0x0030	PreAmp Gain Ch. 4	RW	00 - -3dB, 01 - 0dB, 10 - +3db, 11 - +6db	0x00000000	0x00000003
0x0034	Analog Gain Ch. 4	RW	<Analog Gain Value>	0x00000000	0x000003FF
0x0038	Analog Offset Ch. 4	RW	<Analog Offset Value>	0x00000000	0x000003FF
0x0180	Digital Gain	RW	<Digital Gain Value>	0x00000000	0x00000014
0x0184	Digital Offset	RW	<Digital Offset Value>	0x00000000	0x000003FF
0x0110	Tap Balance	RW	00 - Off, 01 – Auto Dyn, 10 – Once Dyn, 11 - Static	0x00000000	0x00000002
0x0114	Black Level Correction	RW	1 - Enable, 0 - Disable	0x00000000	0x00000001

A.6 AEC, AGC, AIC REGISTERS

Address	Register Name	Type	Usage	MIN Value	MAX Value
0x014C	Auto Iris Control	RW	1 - Enable, 0 - Disable	0x00000000	0x00000001
0x0150	Auto Exposure Control	RW	1 - Enable, 0 - Disable	0x00000000	0x00000001
0x0154	Auto Gain Control	RW	1 - Enable, 0 - Disable	0x00000000	0x00000001
0x0158	Luminance Level Threshold	RW	<Luminance Threshold Value>	0x00000001	0x00000FFF
0x05B0	Maximum Exposure Limit	RW	<Max. Exp. Value>	FRR_EXP_MIN	FRM_TIM_ACT
0x0160	Maximum Gain Limit	RW	<Max. Gain Value>	0x00000001	0x000003FF
0x0164	AOI Horizontal Width	RW	<Width Value>	0x00000001	MAX_HRZ_SZE
0x0168	AOI Horizontal Offset	RW	<Offset Value>	0x00000000	MAX_HRZ_SZE - 1
0x016C	AOI Vertical Height	RW	<Height Value>	0x00000001	MAX_VER_SZE
0x0170	AOI Vertical Offset	RW	<Offset Value>	0x00000000	MAX_VER_SZE - 1
0x0174	Exposure Correction Speed	RW	00 - 1x, 01 - 2x, 10 - 3x, 11 - 4x	0x00000000	0x00000003
0x0178	Gain Correction Speed	RW	00 - 1x, 01 - 2x, 10 - 3x, 11 - 4x	0x00000000	0x00000003
0x017C	Luminance Type Selection	RW	00 - Average, 01 - Peak	0x00000000	0x00000003

A.7 TRIGGER REGISTERS

Address	Register Name	Type	Usage	MIN Value	MAX Value
0x0508	Trigger Input Selector	RW	000 - Off, 001 - External 010 - PG, 011 – Computer, 100 - Software	0x00000000	0x00000004
0x050C	Trigger Edge Selector	RW	1 - Falling, 0 - Rising	0x00000000	0x00000001
0x0510	De-bounce Time Selector	RW	000 - Off, 100 - 10µs, 101 - 50µs, 001 - 100µs, 110 - 500µs, 010 - 1ms, 111 - 5ms, 011 - 10ms	0x00000000	0x00000007

0x0514	Trigger Overlap	RW	00 – Ignore, 10 – Accept, 01 – Accept After Exp.,	0x00000000	0x00000000
0x0518	Triggering Mode Selector	RW	<Trigger Mode>	0x00000000	0x00000004
0x05BC	Triggering Enable/Disable	RW	0 – Enable, 1 – Disable	0x00000000	0x00000004
0x6030	Software Trigger Start	WO	Command	0x00000000	
0x051C	Number of Frames Captured	RW	<Number Frames>	0x00000001	0x0000FFFF
0x0520	Number of Pulses Used	RW	<Number Pulses>	0x00000001	0x0000FFFF
0x0524	Trigger Strobe Enable	RW	00 - Off, 01 – Str1, 10 – Str2, 11 – Str1&2	0x00000000	0x00000003
0x0528	Trigger Exposure Delay	RW	<Exposure Delay Value>	0x00000000	0x00FFFFFF
0x052C	Trigger Strobe Position Delay	RW	<Strobe Position Delay>	0x00000000	0x00FFFFFF
0x05B8	Trigger Strobe Duration	RW	<Strobe Duration>	0x00000000	0x00FFFFFF

A.8 PULSE GENERATOR REGISTERS

Address	Register Name	Type	Usage	MIN Value	MAX Value
0x0530	Pulse Gen. Granularity	RW	00 - 1x, 01 - 10x, 10 - 100x, 11 -1000x	0x00000000	0x00000003
0x0534	Pulse Gen. Pulse Width	RW	<Pulse Width>	0x00000001	0x0007FFFF
0x0538	Pulse Gen. Pulse Period	RO	<Pulse Period>	0x00000001	0x001FFFFF
0x053C	Pulse Gen. # of Pulses	RW	<Number of Pulses>	0x00000001	0x0000FFFF
0x0540	Pulse Gen. Enable	RW	1 - Enable, 0 - Disable	0x00000000	0x00000001

A.9 TEST PATTERN REGISTERS

Address	Register Name	Type	Usage	MIN Value	MAX Value
0x012C	Test Mode Selector	RW	0x0 - Off, 0xX - Test Mode	0x00000000	0x00000009
0x0130	H&V Lines Superimpose	RW	1 - ON, 0 - Off	0x00000000	0x00000001
0x0134	Cross Superimpose	RW	1 - ON, 0 - Off	0x00000000	0x00000001
0x0138	H1 Superimpose Line Position	RW	<H1 Line Position>	0x00000001	MAX_VER_SZE
0x013C	H2 Superimpose Line Position	RW	<H2 Line Position>	0x00000001	MAX_VER_SZE
0x0140	V1 Superimpose Column Position	RW	<V1 Column Position>	0x00000001	MAX_HRZ_SZE
0x0144	V2 Superimpose Column Position	RW	<V2 Column Position>	0x00000001	MAX_HRZ_SZE
0x0148	Superimposed Lines Brightness	RW	<Brightness Value>	0x00000000	0x00000FFF

A.10 STROBE REGISTERS

Address	Register Name	Type	Usage	MIN Value	MAX Value
0x055C	Strobe 1 mode selector	RW	00 - Off, 01 - Each, 10 - Odd, 11 - Even	0x00000000	0x00000003

0x0560	Strobe 2 mode selector	RW	00 - Off, 01 - Each, 10 - Odd, 11 - Even	0x00000000	0x00000003
0x0564	Strobe 1 duration	RW	< S1Duration Value>	0x00000001	FRM_TIM_ACT
0x05B4	Strobe 2 duration	RW	< S2Duration Value>	0x00000001	FRM_TIM_ACT
0x0568	Strobe 1 position	RW	<S1 Position Value>	0x00000001	FRM_TIM_ACT
0x056C	Strobe 2 position	RW	<S2 Position Value>	0x00000001	FRM_TIM_ACT

A.11 INPUT AND OUTPUT REGISTERS

Address	Register Name	Type	Usage	MIN Value	MAX Value
0x0570	CC1 Polarity Selector	RW	1 - Active H, 0 -Active L	0x00000000	0x00000001
0x0574	CC1 Input Selector	RW	<Input Map>	0x00000000	0x00000005
0x0578	CC2 Polarity Selector	RW	1 - Active H, 0 -Active L	0x00000000	0x00000001
0x057C	CC2 Input Selector	RW	<Input Map>	0x00000000	0x00000005
0x0580	IN1 Polarity Selector	RW	1 - Active H, 0 -Active L	0x00000000	0x00000001
0x0584	IN1 Input Selector	RW	<Input Map>	0x00000000	0x00000005
0x0588	IN2 Polarity Selector	RW	1 - Active H, 0 -Active L	0x00000000	0x00000001
0x058C	IN2 Input Selector	RW	<Input Map>	0x00000000	0x00000005
0x0590	OUT1 Polarity Selector	RW	1 - Active H, 0 -Active L	0x00000000	0x00000001
0x0594	OUT1 Output Selector	RW	<Output Map>	0x00000000	0x0000000F
0x0598	OUT2 Polarity Selector	RW	1 - Active H, 0 -Active L	0x00000000	0x00000001
0x059C	OUT2 Output Selector	RW	<Output Map>	0x00000000	0x0000000F
0x05A0	CL Spare Polarity Selector	RW	1 - Active H, 0 -Active L	0x00000000	0x00000001
0x05A4	CL spare Output Selector	RW	<Output Map>	0x00000000	0x0000000F

A.12 OUTPUT DATA FORMAT REGISTERS

Address	Register Name	Type	Usage	MIN Value	MAX Value
0x0100	Bit Depth Selector	RW	000 - 8, 001 -10, 010 - 12, 011 – 14, 100 – 3x8 RGB	0x00000000	0x00000003
0x0104	Bit Shift Selector	RW	<Bit Sift>	0x00000000	0x0000000F
0x0108	Tap Mode Selector	RW	00 - Single, 01 - Dual	0x00000000	0x00000003
0x010C	Data Format Selector	RW	<Format>	0x00000000	0x00000003
0x0188	Negative Image	RW	1 - Enable, 0 - Disable	0x00000000	0x00000001
0x0504	Scan Mode Control	RW	1 - Partial/Center, 0 - Full	0x00000000	0x00000001
0x05A8	Camera LVAL Size	RW	1 - Full, 0 - Active	0x00000000	0x00000001
0x05AC	Camera FVAL Size	RW	1 - Full, 0 - Active	0x00000000	0x00000001
0x0608	Camera Speed	RW	1 - Fast, 0 - Normal	0x00000000	0x00000001

A.13 WB AND COLOR CORRECTION REGISTERS

Address	Register Name	Type	Usage	MIN Value	MAX Value
0x0300	White Balance Mode	RW	00 - Off, 01 - Once, 10 - Auto, 11 – Manual	0x00000000	0x00000003
0x0304	WBC Red	RW	<Value>	0x00000000	0x00000FFF
0x0308	WBC Green	RW	<Value>	0x00000000	0x00000FFF
0x030C	WBC Blue	RW	<Value>	0x00000000	0x00000FFF
0x0310	Gain Red	RW	<Value>	0x00000000	0x00000FFF
0x0314	Gain Green	RW	<Value>	0x00000000	0x00000FFF
0x0318	Gain Blue	RW	<Value>	0x00000000	0x00000FFF
0x031C	Offset Red	RW	<Value>	0x00000000	0x000003FF
0x0320	Offset Green	RW	<Value>	0x00000000	0x000003FF
0x0324	Offset Blue	RW	<Value>	0x00000000	0x000003FF

A.14 DATA CORRECTION REGISTERS

Address	Register Name	Type	Usage	MIN Value	MAX Value
0x0118	Look-Up-Table selector	RW	1 – LUT 2, 0 – LUT 1	0x00000000	0x00000001
0x011C	Look-Up-Table	RW	1 - Enable, 0 - Disable	0x00000000	0x00000001
0x0120	Defective Pixel Correction	RW	1 - Enable, 0 - Disable	0x00000000	0x00000001
0x0124	Hot Pixel Correction	RW	00 – Disable, 01 – Static, 10 – Dynamic, 11 - All	0x00000000	0x00000003
0x0128	Flat Field Correction	RW	00 – Disable, 01 – Static, 10 – Dynamic, 11 - All	0x00000000	0x00000003

A.15 PROCESSING REGISTERS

Address	Register Name	Type	Usage	MIN Value	MAX Value
0x0400	Enhancement Mode	RW	0000 - Off, < Mode Select>	0x00000000	0x00000006
0x0404	Point X1 position	RW	<Point X1 Value>	0x00000000	0x00000FFF
0x0408	Point X2 position	RW	< Point X2 Value >	0x00000000	0x00000FFF
0x040C	Point Y1 position	RW	< Point Y2 Value >	0x00000000	0x00000FFF
0x0410	Point Y2 position	RW	< Point Y2 Value >	0x00000000	0x00000FFF

A.16 LENS CONTROL REGISTERS

Address	Register Name	Type	Usage	MIN Value	MAX Value
0x0414	Iris Travel Slider	RW	Open/Close Iris	0x00000001	0x00000FFF
0x0414	Iris Close	RW	Iris Close	0x00010001	0x00010FFF
0x0414	Iris Open	RW	Iris Open	0x00020001	0x00020FFF

0x0414	Iris Close Full	RW	Iris Close Full (0xFFF)	0x00040XXX	
0x0414	Iris Open Full	RW	Iris Open Full (0xFFF)	0x00080XXX	
0x0414	Iris Stop	RW	Iris Stop	0x00100XXX	
0x0418	Iris Speed Slider	RW	Control Iris Speed	0x00000001	0x000000FF
0x041C	Focus Travel Slider	RW	Focus Near/Far	0x00000001	0x00000FFF
0x041C	Focus Near	RW	Focus Near	0x00010001	0x00010FFF
0x041C	Focus Far	RW	Focus Far	0x00020001	0x00020FFF
0x041C	Focus Near Full	RW	Focus Near Full (0xFFF)	0x00040XXX	
0x041C	Focus Far Full	RW	Focus Far Full (0xFFF)	0x00080XXX	
0x041C	Focus Stop	RW	Focus Stop	0x00100XXX	
0x0420	Focus Speed Slider	RW	Control Focus Speed	0x00000001	0x000000FF
0x0424	Zoom Travel Slider	RW	Zoom Wide/Narrow	0x00000001	0x00000FFF
0x0424	Zoom Out	RW	Zoom Wide	0x00010001	0x00010FFF
0x0424	Zoom In	RW	Zoom Narrow	0x00020001	0x00020FFF
0x0424	Zoom Out Full	RW	Zoom Wide Full (0xFFF)	0x00040XXX	
0x0424	Zoom In Full	RW	Zoom Narrow Full (0xFFF)	0x00080XXX	
0x0424	Zoom Stop	RW	Zoom Stop	0x00100XXX	
0x0428	Zoom Travel Speed	RW	Controls Zoom Speed	0x00000001	0x000000FF
0x042C	Pulse Width	RW	0 -1ms, 1 – 2ms 2 – 4ms, 3 – 8ms	0x00000000	0x00000003
0x042C	Voltage	RW	0 – 6V, 1 – 12V	0x00000000	0x00000010

A.17 MANUFACTURING DATA REGISTERS

Address	Register Name	Type	Value
0x7004	Assembly Part Number	RO	<Assembly Part Number_1>
0x7008	Assembly Part Number	RO	<Assembly Part Number_2>
0x700C	Assembly Part Number	RO	<Assembly Part Number_3>
0x7010	Assembly Part Number	RO	<Assembly Part Number_4>
0x7014	Assembly Serial Number	RO	<Assembly Serial Number_1>
0x7018	Assembly Serial Number	RO	Assembly Serial Number_2
0x701C	CCD Serial Number	RO	<CCD Serial Number_1>
0x7020	CCD Serial Number	RO	<CCD Serial Number_2>
0x7024	Date of Manufacturer	RO	<Date of Manufacturer_1>
0x7028	Date of Manufacturer	RO	<Date of Manufacturer_2>
0x702C	Camera Type	RO	<Type of Camera_1>
0x7030	Camera Type	RO	<Type of Camera_2>
0x7034	Camera Type	RO	<Type of Camera_3>
0x7038	Camera Type	RO	<Type of camera_4>



Creating Look Up Tables

Reference on how to create a lookup table using both an ASCII editor and an Excel spreadsheet

B.1 OVERVIEW

The Lookup Table file can be created using any standard ASCII text editor or by using Microsoft Excel. Additionally, any spreadsheet or mathematical program capable of generating a comma delimited (.csv) file can be used.
See Appendix E for software load procedure.

B.2 USING AN ASCII TEXT EDITOR

A custom LUT (lookup table) can be prepared using any ASCII text editor, such as "Notepad" or similar. Alternatively, any spreadsheet program (i.e. Microsoft Excel) can be used by converting the spreadsheet into a comma delimited (.csv) file. In either case, the file must be renamed to include the .lut extension. The .lut file has two main sections: a header and a table. The 'header' section is a free text area of up to 256 ASCII characters. Each line of the header section must be terminated in a comma. The 'table' section of the file contains an array of 4096 lines with each line containing an input value followed by a comma and an output value. The input values represent incoming pixels and the output values represent what each incoming pixel should be converted into as an output pixel.

The format of the .LUT file is as follows:

```
-- Look Up Table input file example,
-- lines beginning with two dashes are comments,
-- and are ignored by parser,
:Header,
-- this is the text that will get displayed with a 'glh' command,
Function is 'Negative Image',
Created by John Doe,
Date 1/14/09,
:Table,
-- input output,
      0,4095
      1,4094
      2,4093
      3,4092
      4,4091
      :
      4095,0
```

B.3 USING MICROSOFT EXCEL

The .LUT file can be created in Excel as follows:

1 - create the spreadsheet as shown below (note that 4096 rows are required in the table).

2 - add the necessary equations into the output cells to generate the transfer function required.

3 - save the file as a .csv (comma delimited format).

4 - rename the .csv file to an extension of .lut.

	A	B
1	-- GAMMA CORRECTION LUT	
2	-- lines beginning with two dashes are comments	
3	-- and are ignored by parser	
4	:Header	
5	-- this is the text that will get displayed with a 'glh' command	
6	-- Function is 'Gamma Correction G=0.55'	
7	-- Created by Imperx	
8	-- Date 12/26/05	
9	--	
10	:Table	
11	-- This is User Selectable Gamma Value	
12	-- Sets Gamma G (G > 0)	0.55
13	--	
14	-- This is the actual LUT	
15	-- input	output
16	0	0
17	1	42
18	2	61
19	3	77
20	4	90
21	5	102
22	6	113
23	7	123
24	8	132
25	9	141
26	10	149
27	11	157
28	12	165
29	13	173
30	14	180
31	15	187
32	16	193
33	17	200
34	18	206
35	19	213
36	20	219
37	21	225
38	22	231
39	23	236
40	24	242
41	25	247
42	26	253
43	27	258
44	28	263
45	29	269
46	30	274
47	31	279
48	32	284
49	33	288
50	34	293

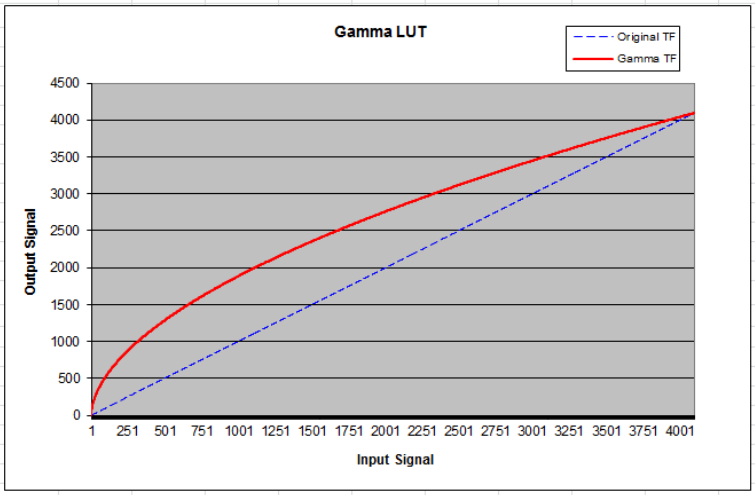



Creating DPC and HPC Tables

How to create a DPC and HPC table using an ASCII editor

C.1 OVERVIEW

The Defective Pixel Map (DPM) and Hot Pixel Map (HPM) are provided with each camera. If the user wants to create its own DPM or HPM file, he/she can use any standard ASCII text editor or Microsoft Excel. Additionally, any spreadsheet or mathematical program capable of generating a comma delimited (.csv) file can be used.

C.2 USING AN ASCII TEXT EDITOR

A custom Defective Pixel Map (DPM) and Hot Pixel Map (HPM) can be prepared using any ASCII text editor, such as "Notepad" or similar. The file must have a .dpm extension for DPM map and .hpm extension for HPM. The .dpm (or .hpm) file has two main sections: a header and a table. The 'header' section is a free text area of up to 256 ASCII characters. Each line of the header section must be terminated in a comma. The 'table' section of the file contains an array of lines with each line containing an X (pixel number) value followed by a comma and a Y (line number) value. All pixels are listed in the DPM (or HPM) in order of increasing Y location. If the Y location is identical, the listing is in order of increasing X location. After editing save each file with the appropriate file extension. The maximum number of pixels in the DMP list is 128, and in HPM list is 1024.

Here is a simple example of how to create a DPM. Create the DPM file with the .dpm file extension using "Notepad" or any other editing software. Locate the defective pixels in the camera and enter them in order starting with the smallest pixel number of the line number first. The file looks like this:

```
-- Defective Pixel Map,
-- Date: 7/21/2013,
-- Model#: CLB-B0610M,
-- Serial#: 060380,
:Table,
-- Column(X),Row(Y)
            4,1
          588,1
           78,5
           82,27
          405,300
```

Note.
In this example the first table entry is pixel 4 from line 1, the next entry is pixel 588 from line 1, and the next entry is pixel 78 from line 5 and so on.



Software Installation - CL

Installing the Bobcat CamConfig software

Use the following steps to install the Bobcat Configurator software supplied on a CD. Note that 'click' refers to the left mouse button.

1. If a version of Bobcat Configurator was previously installed on this machine, then you must first remove it:

   To remove the application files:

   1.1 Click on *"Start"*.
   1.2 Click on *"Settings"*.
   1.3 Click on *"Control Panel"*.
   Double click on "Add or Remove Programs" for Windows XP or "Programs and Features" for Windows Vista and Windows 7.
   1.5 Click on *"Bobcat Configurator"*.
   1.6 Click on *"Remove"*.
   1.7 If the 'Bobcat Configurator – InstallShield Wizard' pops-up then do the following, otherwise go to step 1.8:
   Click on *"Remove"*.
   Click *"Next"*.
   Click "*Yes"*.
   Click "Finish".
   1.8 Click on *"Yes"*.
   1.9 Click on *"Close"*.

2. After having removed a previous version or if a version of Bobcat Configurator was NOT previously installed on this machine then:

   The first step is to install the application files:

   2.1 Insert the Bobcat Configurator CD into the appropriate drive; the setup.exe file will run automatically. Note: If it does not start automatically, click on *"Start"*, *"Run"*, enter or browse to *"(CD drive): setup.exe"* and click *"OK"*.
   2.2 Wait for the "Bobcat Configurator - InstallShield Wizard" screen to appear.
   2.3 Follow the on-screen instructions.
   2.4 Click *"Finish"*. This completes the software installation.
   2.5 Reboot your computer.

   For additional information and the latest updates and downloads, please visit our website at www.IMPERX.com



Firmware Upgrade - CL

How to upgrade the Bobcat Firmware, DPH, HPM, FFC, LUT and camera registers for Bobcat CL cameras

E.1 OVERVIEW

Bobcat Camera series supports user FirmWare (FW) and Workspace registers upgrade, along with a custom DPC, HPC, FFC and LUT tables upload. The upload utility software is provided as a part of CamConfig GUI, shipped with each camera. After installing the program, the user has access to a 'download' utility window, which allows the user to download newly released firmware or other files into the camera's non-volatile memory. To receive the latest FW and RGS files, please contact IMPERX. The user Application Firmware file normally is called "CLB_XXXXX_RU_ABC.rpd" where "XXXXX" represents the camera type and "ABC" represents the version number. The Factory Space upgrade file is normally called "CLB_YYYYY_RU_R***A***.rgs" where "YYYYY" represents the camera type and "***A***" represents the version number.

E.2 BOBCAT UPGRADE

The user can select to upload either new Camera Firmware, Camera Factory Register Space, a Lookup Table, a Defect Pixels Correction table, a Hot Pixels Correction table or a Flat Field Correction file by selecting the appropriate path/filename of the file can be entered manually into the edit box or browsed to by clicking on the '…' button. Clicking on the 'Load File…' button begins the download process. The user must be familiar with the entire procedure and must follow it precisely. To start a Bobcat upgrade, follow the described steps:

Start Application Bobcat CamConfig go to Main Menu and from submenu "Load From…" select "Factory Space". Wait until camera is initialized.

Go to Main Menu and from submenu "Terminal", select Download Terminal.

When "Download Terminal" is opened, from File Type, you have to select what file you want to upload to the Camera: Application Firmware Image (rpd), Factory Space (rgs) file), DPC, HPC, FFC or LUT – Figure E.1.

DPC, HPC, FFC and LUT Upgrade: When you select the appropriate file for this particular camera you have to press button "Load File" and wait to finish the process of uploading. This could take few minutes. When everything is done you should get the message "Done!" Re-power the camera.

FW Upgrade: When you select the appropriate Application Firmware Image file for this particular camera you have to press button "Load File" and wait to finish the process of uploading. This could take few minutes. When everything is done you should get the message "Done! Reset FPGA and the current new version of your camera firmware" – Figure E.2.

RGS Upgrade: When you select the appropriate Factory Space file for this particular camera you have to press button "Load File" and wait to finish the process of uploading. This could take few minutes. When everything is done you should get the message "Uploading is finished successfully". Please re-power your camera after Factory Space upgrading –Figure E.2.

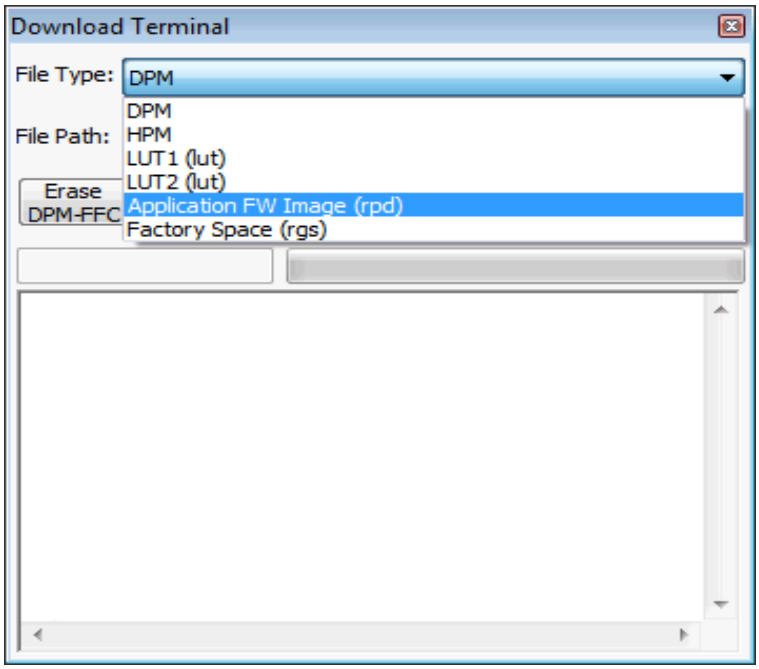

Figure E.1

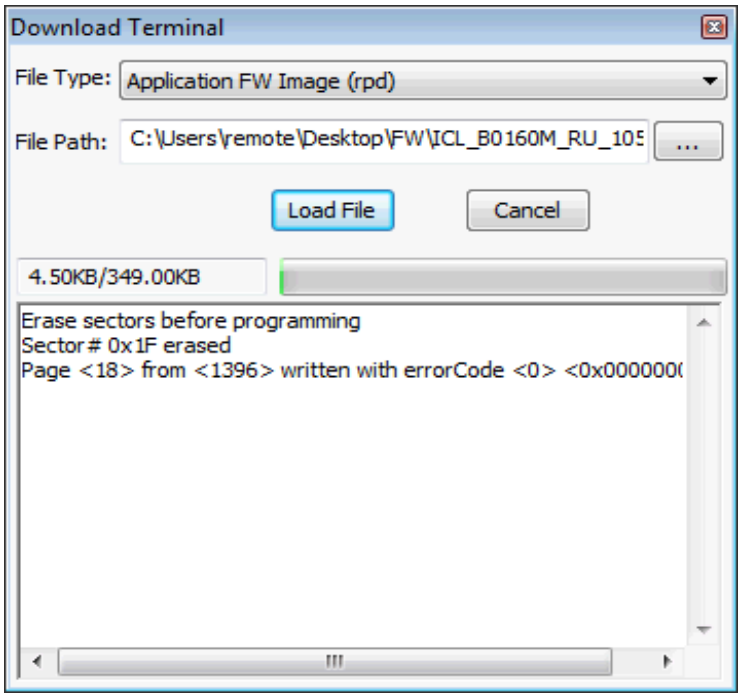

Figure E.2

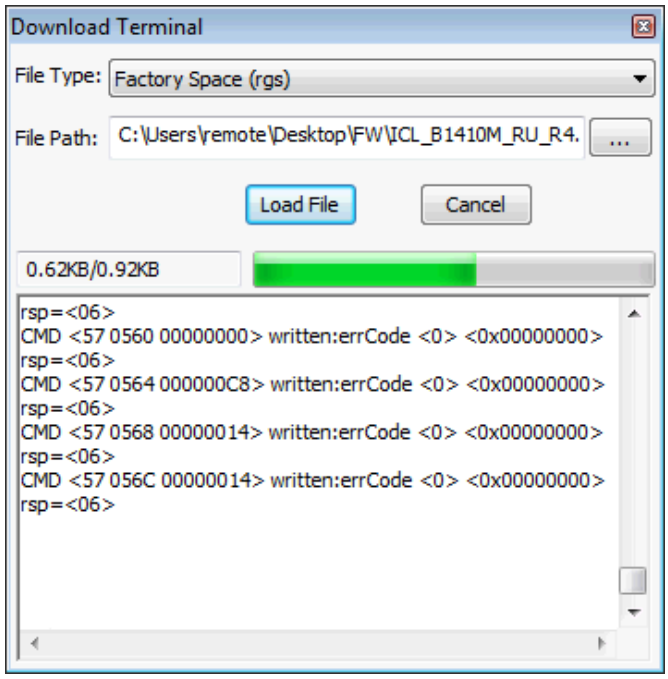

Figure E.3

CAUTION NOTE

It is strongly recommended that you DO NOT USE any other communication software to upgrade the camera FW, RGS, DPC, HPC, FFC and LUT files.

If the user selects to upgrade camera firmware (.RPD file) and camera factory register space (.RGS file), the camera firmware (.RPD) must be upgraded first.

During camera RGS or FW upgrade the camera power must be on all the time, and the process must not be interrupted. If the camera is disconnected or the process canceled, this will result in a user application firmware corruption. If such event occurs start the upload process again until completion. If the upgrade process cannot be completed, the camera will power with the default Factory Firmware so you can start the upgrade process again. If you need more information, please contact IMPERX.

If the user selects to upgrade camera firmware and camera factory register space, the camera firmware must be upgraded first.

During camera RGS or FW upgrade the camera power must be on all the time, and the process must not be interrupted. If the camera is disconnected or the process canceled, this will result in a user application firmware corruption. If such event occurs start the upload process again until completion. If the upgrade process cannot be completed, the camera will power with the default Factory Firmware so you can start the upgrade process again. If you need more information, please contact IMPERX.

During DPC, HPC, FFC or LUT upgrade the camera power must be on all the time, and the process must not be interrupted. If the camera is disconnected or the process canceled, start the upload process again until completion. If the upgrade process cannot be completed, the corresponding camera function will not work. This will not affect the overall camera performance, so you can start the upgrade process again. If you need more information, please contact IMPERX.



GigE Vision® Firmware Upgrade

How to upgrade and install GEV firmware and table upgrades

IMPERX
6421 Congress Ave.
Boca Raton, FL 33487
+1 (561) 989-0006

Rev. 2.1.1
9/26/2017
www.imperx.com

F-1 Overview:

The Bobcat camera GEV can be upgraded and custom DPM, HPM, FFC and LUT files loaded. The example shown is to upgrade the camera firmware as this is more complicated, than the loading of the custom DPM, HPM, FFC and LUT files. the same procedure is used for all.

During firmware upgrade, three files will need to be loaded the .RPD, .RGS and the IP engine. They must be loaded in the order stated.

Before you begin upgrading the camera files the following criteria must be met:

1. Read and understand these Instructions
2. Be familiar with the general operation of the Bobcat camera to be upgraded.
3. Have the PC and camera on a working/charged UPS system.
4. Using the GEV player that you can access the camera connected to the NIC card and that it displays images and generally functions.
5. Close all camera configuration software.
6. Download the correct file or files needed from web site and saved to a known, assessable location (it is recommended that you save this file or files to your desktop.
7. Verify the file or files are for the camera to be upgraded.
8. **Write down the serial number of the camera very important.**

In Windows go to- Start -All programs –IMPERX- Bobcat GEV- Bobcat GEV download utility.

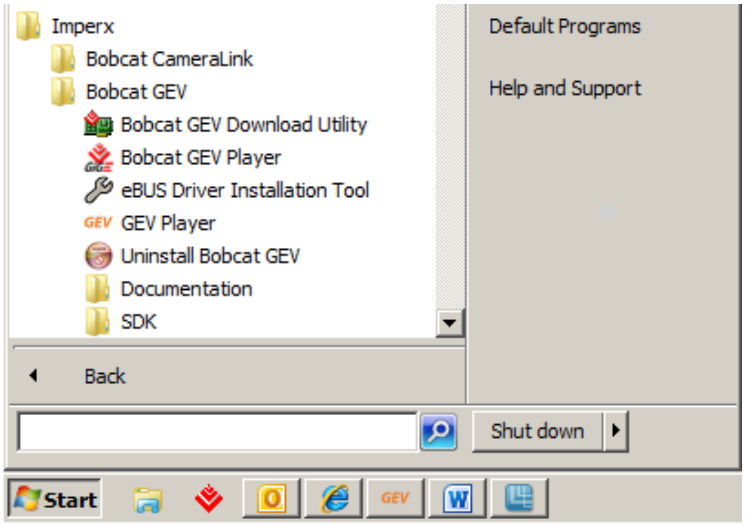

The GEV device selection window will open.

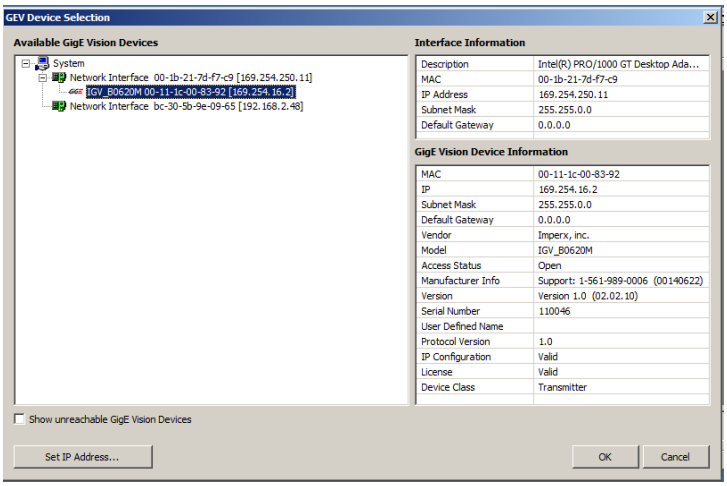

Select the appropriate camera you want to upgrade; the information on the right side of the display should match the device you want to program/upgrade.

Click OK and the download window should appear.

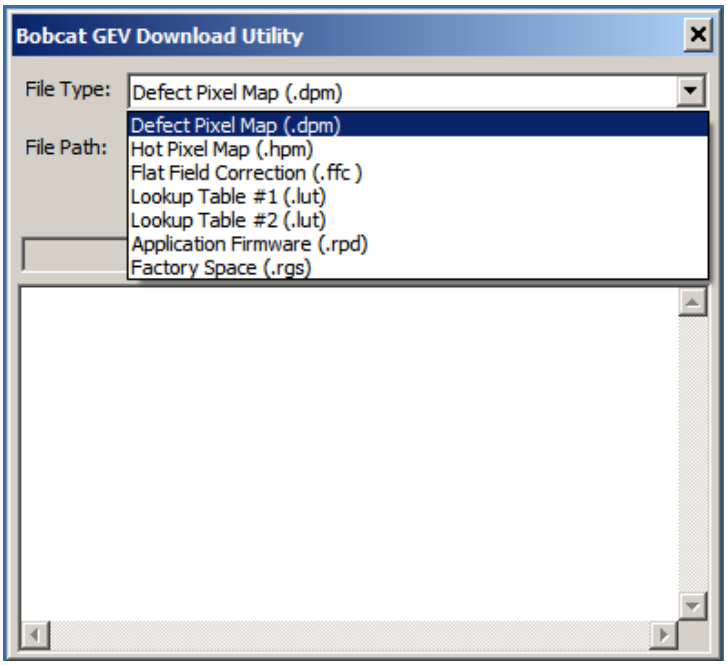

Select the appropriate file (.RPD) and Click on the load file button.

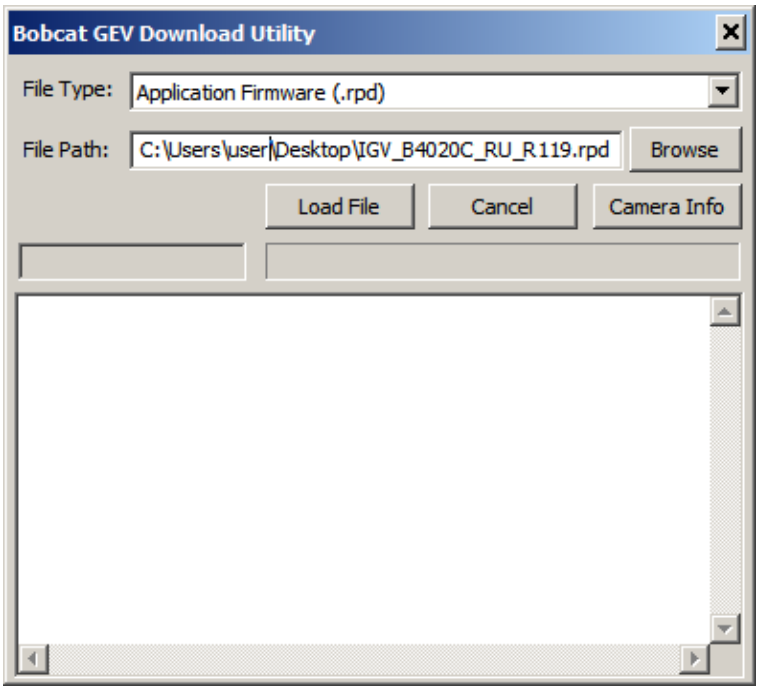

The program will erase the existing file and load the information from the file selected.

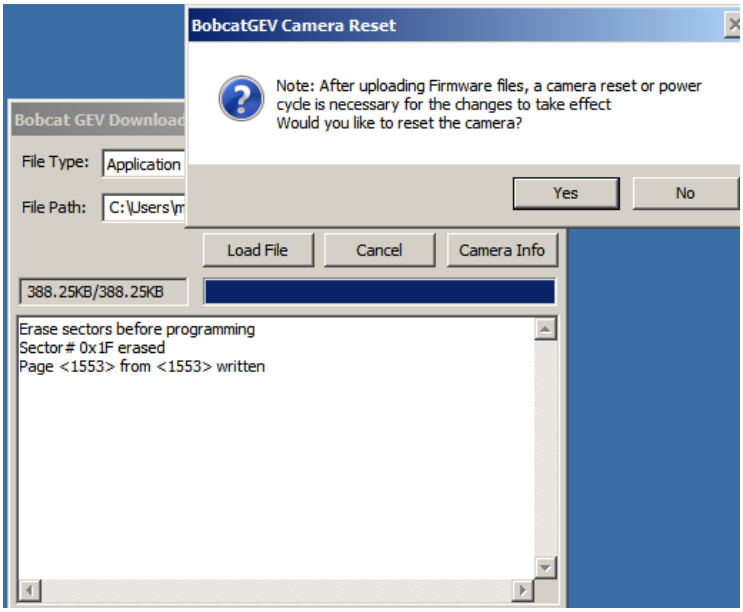

After the download has completed the camera needs to be reset.

Note: You must cycle power to the camera for a proper reset.

F-2 RGS Upgrade

Now you will up-grade the RGS file in a similar manner from the down load utility select" factory space (. RGS). Then, browse to the location of the file and select it.

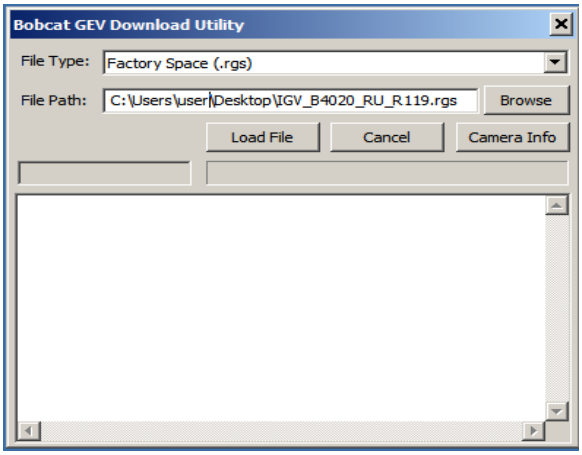

Click the "load file" button to start the upgrade of this file.

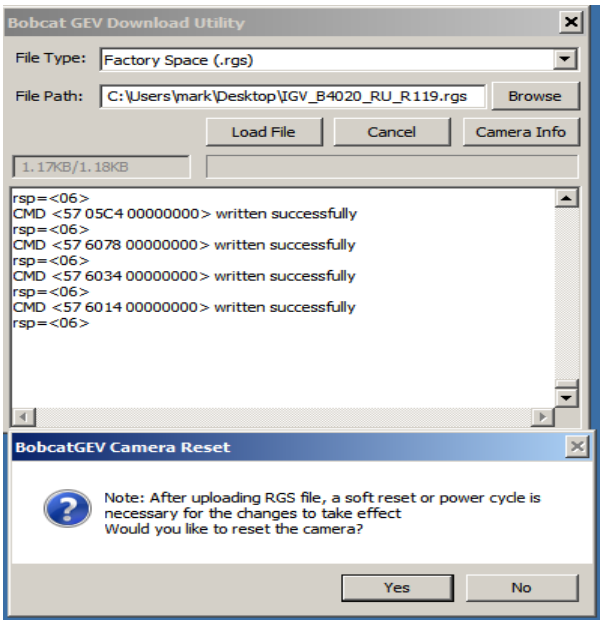

After completion of file uploading, close the down load utility and the camera will need to be reset.

Note: You must cycle power to the camera for a proper reset.

F-3 IP Engine Install

From DOS prompt navigate to the folder where the IGV file is located then run the installer using the IGV file then a space and use parameter –n followed by the serial number of the camera xxxxxx.

Make sure you have the correct IP Engine for the camera model IGV xxxx.exe application.

Use the file name IGVxxxx.exe –n123456 (need a space between the .exe and the -n)

This loads the serial number back into the camera.

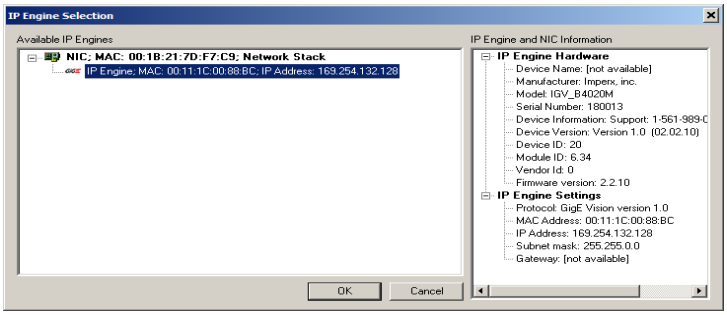

Select the IP engine file and click OK.

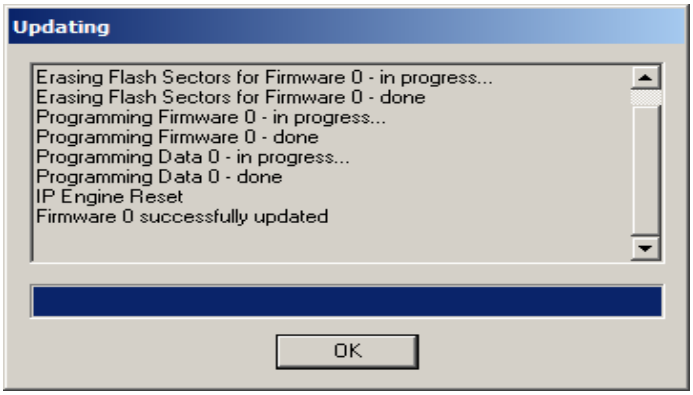

After successful completion of the update close the window and power cycle the camera.

CAUTION NOTE

- It is strongly recommended that you DO NOT USE any other communication software to upgrade the camera FW, RGS, DPC, HPC, FFC and LUT files.
- If the user selects to upgrade camera firmware and camera factory register space, the camera firmware must be upgraded first.
- During camera RGS or FW upgrade the camera power must be on all the time, and the process must not be interrupted. If the camera is disconnected or the process canceled, this will result in a user application firmware corruption. If such event occurs start the upload process again until completion. If the upgrade process cannot be completed, the camera will power with the

default Factory Firmware so you can start the upgrade process again. If you need more information, please contact IMPERX.

- During DPC, HPC, FFC or LUT upgrade the camera power must be on all the time, and the process must not be interrupted. If the camera is disconnected or the process canceled, start the upload process again until completion. If the upgrade process cannot be completed, the corresponding camera function will not work. This will not affect the overall camera performance, so you can start the upgrade process again. If you need more information, please contact IMPERX.



Power Supplies

Power supply models and connectors for Bobcat cameras



Model: PS12V04 Bobcat standard power supply ordered separately.



Trigger & Strobe pigtail with Male BNC connectors

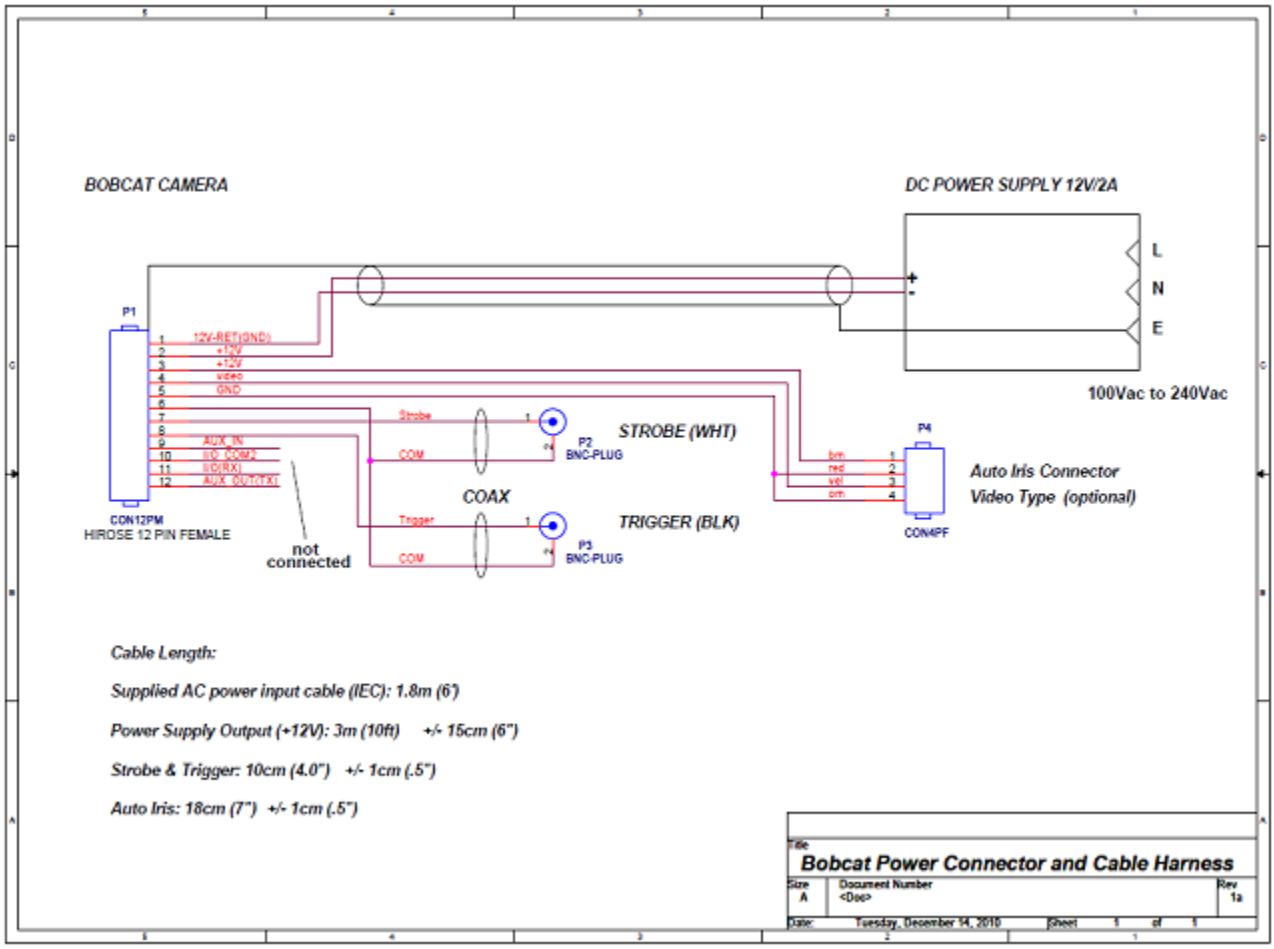

Model: PS12V05 Auto Iris 4 pin Video Type Option power supply ordered separately.

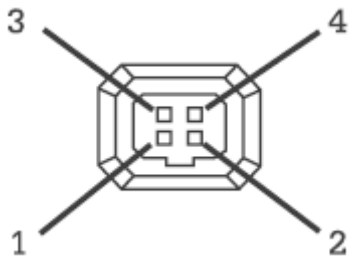

P4 CON4PF: 4-pin MINI plug E4-191J

Pin	Signal	Type	Cable	Description
1	IRIS + 12 VDC	Power	Brn	+ 12 VDC Main Power @ 1A Max
2	IRIS Return	Ground Return	Red	12 VDC Iris Power Return
3	IRIS Video	Video Signal	Yell	Iris Video Output
4	IRIS Return	Ground Return	Orn	12 VDC Iris Power Return

Table 4.0 – Auto Iris 4 pin MINI plug E4-191J

Power Supply Specs:

Cable length:

Supplied AC power input cable (IEC): 1.8m (6') 100 - 240 Vac, 50 - 60Hz 1A
Power supply Output (+12V): 3m (10') ± 15cm (6") connector HIROSE #HR10A-10P-12S
Strobe & Trigger: 10cm (4") ± 1cm (0.5") connector BNC male
Auto Iris Option: 18cm (7") ± 1cm (0.5") Video type 4 Pin MINI plug connector E4-191J

Electrical:

Over-Voltage Protective Installation
Short-circuit Protective Installation
Protection Type: Auto-Recovery
10 -15 VDC 12VDC nominal, 2 A.
Load regulation ± 5%
Ripple & Noise 1% Max.

Regulatory:

Class 1
Safety standards UL60950-1,EN60950-1,IEC60950-1
Safety (1) EMC UL/CUL,CE,TUV,DoIR+C-Tick,Semko,CCC,FCC
Safety (2) BSMI,FCC