IMPERX




# Cheetah Pregius CMOS Cameras
## User Manual
### with Camera Link® Interface

The Imperx Cheetah C1621, C1921, C2020, C2420, C2420Y/Z, C2820, C3220, C4020, C4120, C4420, C4510, C5310, C5311, C5420, and C6420 CMOS cameras provide exceptional video image quality in a remarkably compact and ruggedized design with resolution from 1.68 to 31 MP. The cameras use Sony 2nd, 3rd, and 4th generation Pregius CMOS sensors for their high sensitivity, image clarity, and high dynamic range. They achieve frame rates up to 148 frames per second with Camera Link® Full, PoCL® output.

Revision 1.9

IMPERX
Industrial Cameras & Imaging Systems

# About Imperx, Inc.

IMPERX, Inc. is a leading designer and manufacturer of high performance, high quality digital cameras, frame grabbers, and accessories for industrial, commercial, military, and aerospace imaging applications including flat panel inspection, biometrics, aerial mapping, surveillance, traffic management, semiconductors and electronics, scientific & medical Imaging, printing, homeland security, space exploration, and other imaging and machine vision applications.

Fortune 100 companies, federal and state government agencies, domestic and foreign defense agencies, academic institutions, and other customers worldwide use IMPERX products.

Imperx, Inc. | 6413 Congress Ave. Suite 150 | Boca Raton, FL, 33487
US Phone: +1 (561) 989-0006

# Warranty

IMPERX warrants performance of its products and related software to the specifications applicable at the time of sale in accordance with IMPERX's standard warranty, which is 2 (two) years parts and labor. FOR GLASSLESS CAMERAS THE CCD OR CMOS IS NOT COVERED BY THE WARRANTY.

Do not open the housing of the camera. Warranty voids if the housing has been open or tampered.

**IMPORTANT NOTICE**
This camera has been tested and complies with the limits of Class A digital device, pursuant to part 15 of the FCC rules.

Copyright © 2017–2024 IMPERX Inc. All rights reserved. All information provided in this manual is believed to be accurate and reliable. No responsibility is assumed by IMPERX for its use. IMPERX reserves the right to make changes to this information without notice. Redistribution of this manual in whole or in part, by any means, is prohibited without obtaining prior permission from IMPERX. IMPERX reserves the right to make changes to its products or to discontinue any product or service without notice and advises its customers to obtain the latest version of relevant information to verify, before placing orders, that the information being relied on is current.

IMPERX PRODUCTS ARE NOT DESIGNED, INTENDED, AUTHORIZED, OR WARRANTED TO BE SUITABLE FOR USE IN LIFE-SUPPORT APPLICATIONS, DEVICES OR SYSTEMS OR OTHER CRITICAL APPLICATIONS, WHERE MALFUNCTION OF THESE PRODUCTS CAN REASONABLY BE EXPECTED TO RESULT IN PERSONAL INJURY. IMPERX CUSTOMERS USING OR SELLING THESE PRODUCTS FOR USE IN SUCH APPLICATIONS DO SO AT THEIR OWN RISK AND AGREE TO FULLY INDEMNIFY IMPERX FOR ANY DAMAGES RESULTING FROM SUCH IMPROPER USE OR SALE.

# TABLE OF CONTENTS

**About the Camera ..... 10**
General ..... 10
Key Features ..... 13
Technical Specifications ..... 14
C1621 Camera Specifications ..... 14
C1921 and C1921-H Cameras Specifications ..... 15
C1921-M Camera Specifications ..... 16
C2020 and C2020-H Cameras Specifications ..... 17
C2020-M Camera Specifications ..... 18
C2420 and C2420-H Cameras Specifications ..... 19
C2420-M Camera Specifications ..... 20
C2420Y/Z and C2420Y/Z-H Cameras with Micro-Polarizer ..... 21
C2420Y/Z-M Camera with Micro-Polarizer ..... 22
C2820 and C2820-H Cameras Specifications ..... 23
C2820-M Camera Specifications ..... 24
C3220 and C3220-H Cameras Specifications ..... 25
C3220-M Camera Specifications ..... 26
C4020 and C4020-H Cameras Specifications ..... 27
C4020-M Camera Specifications ..... 28
C4120 and C4120-H Cameras Specifications ..... 29
C4120-M Camera Specifications ..... 30
C4420 Camera Specifications ..... 31
C4420-T Camera Specifications ..... 32
C4510 and C4510-H Cameras Specifications ..... 33
C4510-M Camera Specifications ..... 34
C5310 and C5310-H Cameras Specifications ..... 35
C5310-M Camera Specifications ..... 36
C5311 and C5311-H Cameras Specifications ..... 37
C5311-M Camera Specifications ..... 38
C5420 Camera Specifications ..... 39
C5420-T Camera Specifications ..... 40
C6420 Camera Specifications ..... 41
C6420-T Camera Specifications ..... 42
Ordering Information ..... 43
Accessories ..... 44
Technical Support ..... 45

**Hardware ..... 46**
C1621, C1921, C2020, C2420, C2420Y/Z, C2820, C3220, C4020, C4120, C4510, C5310, and C5311 Cameras Connectivity ..... 46
C1921-M, C2020-M, C2420-M, C2420Y/Z-M, C2820-M, C3220-M, C4020-M, C4120-M, C4510-M, C5310-M, and C5311-M Cameras Connectivity ..... 47
C4420, C5420, C6420 Cameras Connectivity ..... 48
C4420-T, C5420-T, C6420-T Cameras Connectivity ..... 49
Hirose Connector Pin Assignments ..... 50
I-PEX Connector Pin Assignments ..... 51
Connecting a P-Iris Lens to Cameras with Hirose Connector ..... 53
Connecting a P-Iris Lens to Cameras with I-PEX Connector ..... 55
Camera LED Status Indicators ..... 56
Power Supply and Cables ..... 56

PS12V14A Power Supply ..... 57
PS12V18A Power Supply ..... 58
PS12V14A and PS12V18A Specifications ..... 59
Connecting the PS12V14A / PS12V18A Power Supply ..... 60
PS12V14A Connection Diagram ..... 61
PS12V18A Connection Diagram ..... 61
I/O Cable CBL-PWIO01 ..... 62
Active Canon EF Mount ..... 63
Electrical Connectivity ..... 64
Opto-Isolated Input IN1 ..... 64
TTl/LVTTL Input IN2 ..... 64
TTL Output OUT1 ..... 64
Opto-Isolated Output OUT2 ..... 65
Mechanical Drawings ..... 67
C1621, C1921, C2020, C2420, C2420Y/Z, C2820, C3220, C4020, C4120, C4510, C5310, C5311 Cameras ..... 68
C1921-M, C2020-M, C2420-M, C2420Y/Z-M, C3220-M, C4020-M, C4120-M, C4510-M, C5310-M, C5311-M Cameras ..... 70
C1921, C2020, C2420, C2420Y/Z, C2820, C3220, C4020, C4120, C4510, C5310, C5311, C1921-M, C2020-M, C2420-M, C2420Y/Z-M, C2820-M, C3220-M, C4020-M, C4120-M, C4510-M, C5310-M, C5311-M Cameras Mounting Plate ..... 72
C4420, C5420, and C6420 Cameras ..... 73
C4420-T, C5420-T, and C6420-T Cameras ..... 75
C4420, C5420, C6420, C4420-T, C5420-T, and C6420-T Cameras Mounting Plate ..... 77
Optical ..... 78
Environmental ..... 79

**Configuration Software ..... 80**
Overview ..... 80
Installing the Software ..... 80
Installation ..... 80
Starting CamConfig ..... 84
Main Window ..... 85
Menu ..... 86
View ..... 91
Help ..... 92
Gain & Exposure ..... 93
Output ..... 95
Output (OUT1 and OUT2) ..... 95
Strobes 1 and 2 ..... 96
Pulse Generator ..... 97
Trigger Control ..... 98
Trigger Options ..... 98
Trigger Strobe Options ..... 99
AEC/AGC/AIC ..... 100
Image Control ..... 102
Master AOI ..... 103
Slave AOI ..... 103
Binning ..... 104
Decimation ..... 104
Polarization Mode – C2420Y/Z Camera ..... 105
Image Flip ..... 106

Image Structure ..... 106
Image Correction ..... 108
Test ..... 109
Color ..... 110
P-Iris Lens Control ..... 111
Canon Lens Control ..... 112
Iris Control ..... 113
Temperature Control ..... 114

**Camera Features ..... 116**
Image Data Flow ..... 116
Exposure Control ..... 117
Exposure Control in Free-Running Mode ..... 117
Exposure Control in Triggered Mode ..... 119
Setting Exposure in Trigger Mode ..... 119
Global Shutter ..... 120
Automatic Exposure Control ..... 121
Automatic Gain Control ..... 122
Input / Output Control ..... 122
Camera Triggering ..... 123
Standard Trigger Mode ..... 123
Fast Trigger Mode ..... 126
Trigger Sources ..... 127
Configuring the Trigger ..... 128
Strobe and Synchronization Controls ..... 130
Area of Interest ..... 132
Horizontal and Vertical Window ..... 133
Factors Impacting Frame Rate ..... 133
Slave AOI ..... 134
Binning and Sub-Sampling Decimation ..... 135
Binning ..... 135
Sub-Sampling Decimation ..... 136
Data Output Format ..... 137
Bit Depth ..... 137
Output Taps ..... 138
Gain and Offset ..... 138
Image Sensor's Analog and Digital Gain ..... 138
Digital Gain ..... 138
Digital Offset ..... 138
Black Level Modes ..... 138
Bad Pixel Correction ..... 139
Static Pixel Correction ..... 139
Dynamic Pixel Correction ..... 139
Transfer Function Correction ..... 140
Color Control ..... 141
Image Sensor Technology ..... 141
Micro-Polarized Camera ..... 143

**Register-based Commands ..... 144**
Configuration Memory ..... 144
Camera Serial Protocol ..... 144
Write Operation ..... 145

Read Operation ..... 146
Error Code Description ..... 147

**Appendix A – Camera Registers ..... 148**
Camera Register Structure ..... 148
Local Space ..... 148
Boot Loader ..... 149
Camera Info Registers ..... 149
EEPROM Space ..... 150
Gain, Offset, Exposure Control and MAOI Registers ..... 150
Data output, Data Correction, SAOI Registers ..... 153
White Balance Registers ..... 156
Trigger, I/O Interface, Strobe and Pulse Generator Registers ..... 157
P-Iris Control Registers ..... 160
Canon EF Lens Control Registers ..... 161
Miscellaneous Registers ..... 162

**Appendix B: Creating HPC table ..... 163**
Overview ..... 163
Downloading DPM / HPM Files ..... 163
Editing HPM Files ..... 164
Finding Hot Pixels ..... 164
Locating and Adding Pixel Coordinates ..... 165
Creating New HPM File ..... 168
Uploading HPM Files ..... 169

**Appendix C: Look Up Tables ..... 171**
Creating an LUT Using a Text Editor ..... 171
Creating an LUT Using Microsoft Excel ..... 172
Creating an LUT Using Imperx Toolkit ..... 173
Uploading the LUT File ..... 177

**Appendix D: Spectral Response ..... 179**
Cheetah C1621 Spectral Response ..... 179
Cheetah C1921 Spectral Response ..... 180
Cheetah C2020 Spectral Response ..... 181
Cheetah C2420 Spectral Response ..... 182
Cheetah C2424YZ Spectral Response ..... 183
Cheetah C2820 Spectral Sensitivity ..... 184
Cheetah C3220 Spectral Response ..... 185
Cheetah C4020 Spectral Response ..... 186
Cheetah C4120 Spectral Response ..... 187
Cheetah C4420 and C4420-T Spectral Response ..... 188
Cheetah C4510 Spectral Response ..... 189
Cheetah C5310 Spectral Response ..... 190
Cheetah C5311 Spectral Response ..... 191
Cheetah C5420 and C5420-T Spectral Response ..... 192
Cheetah C6420 and C6420-T Spectral Response ..... 193

# REVISION HISTORY

| Revision | Date | Reviser | Comments |
|---|---|---|---|
| 1.0 | 12/21/2017 | R.Johnston | Initial release. |
| 1.1 | 07/06/2018 | R.Johnston | Added AEC/AGC speed control; added C2420 polarizer camera; updated Image Control GUI screen. |
| 1.2 | 11/8/2018 | K Wetzel | Update operating and environmental temp ranges<br>Added Digital Gain and Offset registers to Appendix A |
| 1.3 | 04/13/2020 | I. Barabanova | Included C1921, C3220, C4420, C5420, and C6420 cameras.<br>Added Digital gain, Exposure control, AOI, FFC to Specifications tables<br>Added Vibration/Shock compliance<br>Adjusted storage temperatures to:<br>from -40 °C to +85 °C.<br>Added more trigger options in Specifications tables (pulse width, trigger filter, trigger delay, debounce)<br>Extended Key Features list<br>Added accessories to Ordering Information<br>Added mounting plates<br>Updated GUI screenshots<br>Removed Line Time (on Gain & Exposure screen)<br>C4120 frame rate adjusted to 29 fps at 12 bpp (in CLF mode)<br>Adjusted 0x054C register type to RW (Appendix A, I/O Interface Registers)<br>Added Appendix B – Creating DPC/ HPC tables<br>Added Hirose pin assignments with P-IRIS<br>Added P-IRIS and Canon lens control GUI screens<br>Added P-IRIS and Canon lens control registers |
| 1.4 | 06/01/2021 | I. Barabanova | Added C4420-T, C5420-T, and C6420-T cameras (specification tables, mechanical drawings, GUI).<br>Added TEC control registers.<br>Updated the Canon Lens Control Registers table<br>Added new sections to the Camera Features:<br>- Camera Triggering<br>- Area of Interest<br>- Binning and Sub-sampling Decimation<br>- Data Output Format<br>- Gain and Offset<br>- Bad Pixel Correction<br>- Transfer Function Correction<br>Added Appendix C: LUT and Appendix D: Spectral Response<br>Updated the Exposure Control and Strobes and Synchronization Controls sections.<br>Added FFC support in C1920 and C2020 cameras<br>Updated mechanical drawings for the C4420, C5420, C6420 cameras<br>Added new Power Supplies PS12V14A and PS12V18A |
| 1.5 | 07/07/2021 | I. Barabanova | For C1921, C2020, C2420, C3220, C4020, C4120:<br>Updated mechanical drawings on pp.42–43<br>Updated Dimensions and Weight specifications |

| Revision | Date | Reviser | Comments |
|---|---|---|---|
| 1.6 | 5/12/2022 | I. Barabanova | Changed the Frame Rate of the C1921 camera in CL Medium mode to 62.8 at 12-bit output |
| 1.7 | 10/05/2022 | I. Barabanova | Added cameras with a 50-pin connector<br>Added C4510, C5310, C5311 camera models<br>Added cameras with a heater option<br>Updated Canon Lens Control GUI |
| 1.8 | 2/23/2023 | I. Barabanova | Added C2820 camera |
| 1.9 | 8/21/2024 | I. Barabanova | Added C1621 camera<br>Changed company's address |

# About the Camera

## General

The Cheetah Camera Link CMOS cameras feature advanced Sony Pregius CMOS image sensors, global shutter technology, and Camera Link interface to produce high quality images with fast frame rates in a small form factor for industrial application. The cameras ship with Imperx CamConfig programming software featuring an easy-to-use graphical user interface (GUI).

The cameras in this manual support Camera Link Base, Medium, and Full connectivity for reliability and high frame rates. Power over Camera Link (PoCL) capability is provided to minimize cabling. Camera Link cameras require a frame grabber on the computer for capturing individual frames from the camera's video stream.

The manual describes the cameras listed in the following table.

| Camera Model | Resolution (MP) | Resolution | Frame Rate (Max) | Sensor Type | Optics | Pixel Size (microns) | Sony Sensor Model |
|---|---|---|---|---|---|---|---|
| CLF-C1621 | 1.68 | 1528 x 1104 | 252 | C, M | 1.1" | 9.0 | IMX425 |
| CLF-C1921,<br>CLF-C1921-H,<br>CLF-C1921-M | 2.86 | 1944 x 1472 | 174 | C, M | 2/3" | 4.5 | IMX421 |
| CLF-C2020,<br>CLF-C2020-H,<br>CLF-C2020-M | 3 | 2064 x 1544 | 148 | C, M | 1/1.8" | 3.45 | IMX252 |
| CLF-C2420,<br>CLF-C2420-H<br>CLF-C2420-M | 5 | 2464 x 2056 | 97 | C, M | 2/3" | 3.45 | IMX250 |
| CLF-C2420Y/Z,<br>CLF-C2420Y/Z-H<br>CLF-C2420Y/Z-M | 5 | 2464 x 2056 | 97 | Y, Z* | 2/3" | 3.45 | IMX250MY/ZR |
| CLF-C2820,<br>CLF-C2820-H,<br>CLF-C2820-M | 8.1 | 2856 x 2848 | 59 | Q, W | 2/3" | 2.74 | IMX487 |
| CLF-C3220,<br>CLF-C3220-H,<br>CLF-C3220-M | 7.1 | 3216 x 2208 | 74 | C, M | 1.1" | 4.5 | IMX420 |
| CLF-C4020,<br>CLF-C4020-H,<br>CLF-C4020-M | 9 | 4112 x 2176 | 57 | C, M | 1" | 3.45 | IMX255 |
| CLF-C4120,<br>CLF-C4120-H<br>CLF-C4120-M | 12 | 4112 x 3008 | 42 | C, M | 1.1" | 3.45 | IMX253 |

| Camera Model | Resolution (MP) | Resolution | Frame Rate (Max) | Sensor Type | Optics | Pixel Size (microns) | Sony Sensor Model |
|---|---|---|---|---|---|---|---|
| CLF-C5311, CLF-C5311-H CLF-C5311-M | 16.2 | 5328 x 3040 | 32.6 | C, M | 1.1” | 2.74 | IMX542 |
| CLF-C5420, CLF-C5420-T | 17 | 5472 x 3084 | 32 | C, M | 4/3” | 3.45 | IMX387 |
| CLF-C4420, CLF-C4420-T | 20 | 4432 x 4436 | 28 | C, M | 4/3” | 3.45 | IMX367 |
| CLF-C4510, CLF-C4510-H, CLF-C4510-M | 20.4 | 4512 x 4512 | 25.9 | C, M | 1.1” | 2.74 | IMX541 |
| CLF-C5310, CLF-C5310-H, CLF-C5310-M | 24.6 | 5328 x 4608 | 21.7 | C, M | 1.2” | 2.74 | IMX540 |
| CLF-C6420, CLF-C6420-T | 31 | 6480 x 4860 | 17 | C, M | APS-C | 3.45 | IMX342 |

*Note:

C – color sensor
M – monochrome sensor
Y – color micro-polarized sensor
Z – monochrome micro-polarized sensor
Q – ultraviolet with quartz glass cover sensor
W – ultraviolet without glass cover sensor
T – thermoelectric Peltier cooling module
M – 50-pin I-PEX 20682-050E-02 connector
H – heater option

The C1621, C1921, C2020, C2420, C2420Y/Z, C2820, C3220, C4020, C4120, C4510, C5310, and C5311 are small profile, progressive scan digital cameras. They are fully programmable and field upgradeable. The cameras feature a built-in image-processing engine, low power consumption, low noise, and high dynamic range The cameras provide several trigger modes and output strobes allowing you to synchronize the image capture of one or more cameras to an external event. They also provide Area of Interest (AOI) and programmable look-up tables (LUT).

The C4510, C5310, and C5311 cameras feature 20.4 MP, 24.6 MP, and 16.2 MP Sony Pregius S™ Gen 4 sensors that use a stacked back-illuminated pixel structure. The Pregius S technology offers 2.74-micron square pixels in compact design, increased peak quantum efficiency, and improved sensitivity with fast lenses.

The C2820 ultraviolet camera features Sony Pregius S IMX487 image sensor capturing images in the UV spectral range from 200 nm to 400 nm.

The C1921-H, C2020-H, C2420-H, C2820-H, C3220-H, C4020-H, C4120-H, C4510-H, C5310-H, and C5311-H cameras include an internal heater to extend the operational temperature range down to -50 °C.

In the C1921-M, C2020-M, C2420-M, C2820-M, C3220-M, C4020-M, C4120-M, C4510-M, C5310-M, and C5311-M cameras, the normal Camera Link and Hirose connectors are eliminated. Power and I/O interface exit from the side of the camera to reduce the overall camera length so the camera will fit into small enclosures. These cameras feature 50-pin I-PEX 20682-050E-02 connector and do not support Power over Camera Link standard.

The C1921 and C3220 cameras have large 4.5-micron square pixels for improved sensitivity and dynamic range (77 dB).

The C4420, C5420, and C6420 cameras feature 20 MP, 17 MP, and 31 MP Sony Pregius CMOS sensors respectively, provide support for active Canon EOS lens with iris and focus control.

The C4420-T, C5420-T, and C6420-T cameras feature thermoelectric Peltier cooling module (TEC) that stabilizes the sensor temperature to a certain level reducing thermal noise and improving measurement precision. Built-in forced air-cooling is available.

The C2420Y/Z camera features a micro-polarized CMOS sensor. The sensor has a 2x2 pixel sub-array where each pixel within the sub-array blocks a different polarization angle (0, 45, 90 or 135 degrees). The camera's 2462 x 2056 resolution provides resolution of 1232 x 1028 per polarization angle.

The cameras are suitable in a wide range of environmental conditions and applications, such as machine vision, industrial inspection, high-definition surveillance, aerospace, and more.

## Key Features

- Global shutter (GS)
- Color and monochrome versions
- Fast frame rates
- Back-illuminated pixel structure (C2820, C4510, C5310, and C5311 cameras only)
- Camera Link interface
- Internal, external exposure controls
- Automatic gain and exposure control (AEC/AGC)
- Analog and digital gain control
- Offset control
- Built-in pulse generator
- Two Areas of Interest (AOI)
- Two strobe outputs and trigger inputs
- Automatic and manual white balance
- Binning and sub-sampling
- Four 12-bit look-up tables (LUT)
- Defective and hot pixel correction, user-defined and factory
- Flat field correction, user defined and factory
- Dynamic transfer function and gamma corrections
- Optional P-Iris (except for C4420, C5420, C6420, C4420-T, C5420-T, and C6420-T)
- Canon EOS EF lens control (C4420, C5420, C6420, C4420-T, C5420-T, C6420-T cameras only)
- Thermoelectric Peltier cooling (C4420-T, C5420-T, and C6420-T cameras only)
- Internal heater option (except for C4420, C5420, C6420, C4420-T, C5420-T, and C6420-T)
- Temperature monitor
- Field upgradeable firmware

# Technical Specifications

## C1621 Camera Specifications

| Specifications | C1621 (1.68 MP) |
|---|---|
| Active image resolution | 1528 (H) x 1104 (V) |
| Pixel size | 9.0 µm |
| Optical format | 1.1 inch |
| Shutter | Global |
| Frame rate (max) | 252 fps (8-bit), 209.5 fps (10-bit), 95.6 fps (12-bit) |
| Digitization | 8-bit, 10-bit, 12-bit |
| Pixel clock rate | 37.125 MHz |
| Dynamic range | 77 dB |
| Shutter speed | 10 µs to 16.0 s |
| Analog / Digital gain | 0–48 dB (0.1 dB step) |
| Digital gain | 1x (0 dB) to 4x (12 dB), 0.001x step |
| AEC/AGC | Yes |
| Black level offset | Manual (0–255), auto |
| Exposure control | Manual, auto, external, off |
| Binning | Not supported |
| Sub-sampling | Not supported |
| White balance | Once, manual, auto, off |
| Area of interest (AOI) | Two |
| Trigger inputs | External, pulse generator, software, computer |
| Trigger options | Edge, overlap, pulse width, trigger filter, trigger delay, debounce |
| Trigger modes | Free-run, standard, fast |
| I/O control | 2 IN (OPTO, LVTTL) / 2 OUT (OPTO, TTL) |
| Strobe output | 2 strobes, programmable position and duration |
| Pulse generator | Yes, programmable |
| Lens mount | C-mount (default), P-Iris (optional) |
| Camera housing | 6000 series aluminum |
| Upgradeable firmware | Yes |
| Data correction | 4 LUTs pre-programmed with Gamma 0.45, BPC (static, dynamic), FFC |
| Supply voltage range | 12 V DC (6 V–30 V), 1.5 A inrush @ 12 V |
| Power consumption | Typical: 2.4 W @ 12 V |
| Camera size (W x H x L) | 37.0 mm x 37.0 mm x 47.2 mm |
| Weight | 103.4 g |
| Vibration, shock | Complies with IEC60068-2-64 and IEC60068-2-27 |
| Environmental | -30 °C to +75 °C Operating; -40 °C to +85 °C Storage |
| Relative humidity | 10% to 90% non-condensing |
| Regulatory | FCC part 15 Class A, CE, RoHS, UKCA |
| MTBF | 530,000 hours @ 50 °C (Telcordia SR-332) (EST) |

# C1921 and C1921-H Cameras Specifications

| Specifications | | C1921 and C1921-H (2.86 MP) |
|---|---|---|
| Active image resolution | | 1944 (H) x 1472 (V) |
| Pixel size | | 4.5 µm |
| Optical format | | 2/3 inch |
| Shutter | | Global |
| Frame rate (max) | | 174 fps (8-bit), 143 fps (10-bit), 62.8 fps (12-bit) |
| Digitization | | 8-bit, 10-bit, 12-bit |
| Pixel clock rate | | 37.125 MHz |
| Dynamic range | | 77 dB |
| Shutter speed | | 5 µs to 16.0 s |
| Analog / Digital gain | | 0–48 dB (0.1 dB step) |
| Digital gain | | 1x (0 dB) to 4x (12 dB), 0.001x step |
| AEC/AGC | | Yes |
| Black level offset | | Manual (0–255), auto |
| Exposure control | | Manual, auto, external, off |
| Binning | | 1x2, 2x1 and 2x2 (available in monochrome cameras only) |
| Sub-sampling | | 1x2, 2x1 and 2x2 |
| White balance | | Once, manual, auto, off |
| Area of interest (AOI) | | Two |
| Trigger inputs | | External, pulse generator, software, computer |
| Trigger options | | Edge, overlap, pulse width, trigger filter, trigger delay, debounce |
| Trigger modes | | Free-run, standard, fast |
| I/O control | | 2 IN (OPTO, LVTTL) / 2 OUT (OPTO, TTL) |
| Strobe output | | 2 strobes, programmable position and duration |
| Pulse generator | | Yes, programmable |
| Lens mount | | C-mount (default), P-Iris (optional) |
| Camera housing | | 6000 series aluminum |
| Upgradeable firmware | | Yes |
| Data correction | | 4 LUTs pre-programmed with Gamma 0.45, BPC (static, dynamic), FFC |
| Heater control | **C1921-H** | Heater turns On below -30 °C; Heater turns Off above -20 °C;<br>10 °C (fixed) hysteresis |
| Supply voltage range | **C1921** | 12 V DC (6 V–30 V), 1.5 A inrush @ 12 V |
| | **C1921-H** | 12 V DC (10 V–20 V), 1.5 A inrush @ 12 V |
| Power consumption | **C1921** | Typical: 2.4 W @ 12 V |
| | **C1921-H** | 6 W @ 12 V to 10.5 W @ 18 V (heater is On); 2.4 W @ 12 V (heater is Off)<br>Heater power dissipation varies with input supply voltage from 3.6 W @12 V to 8.1 W @18 V |
| Camera size (W x H x L) | | 37.0 mm x 37.0 mm x 47.2 mm |
| Weight | | 103.4 g |
| Vibration, shock | | Complies with IEC60068-2-64 and IEC60068-2-27 |
| Environmental | **C1921** | -30 °C to +75 °C Operating; -40 °C to +85 °C Storage |
| | **C1921-H** | -50 °C to +75 °C Operating; -40 °C to +85 °C Storage |
| Relative humidity | | 10% to 90% non-condensing |
| Regulatory | | FCC part 15 Class A, CE, RoHS, UKCA |
| MTBF | **C1921** | 530,000 hours @ 50 °C (Telcordia SR-332) (EST) |
| | **C1921-H** | 500,000 hours @ 50 °C (Telcordia SR-332) (EST) |

# C1921-M Camera Specifications

| Specifications | C1921-M (2.86 MP) (with a 50-pin I-PEX 20682-050E-02 connector) |
|---|---|
| Active image resolution | 1944 (H) x 1472 (V) |
| Pixel size | 4.5 µm |
| Optical format | 2/3 inch |
| Shutter | Global |
| Frame rate (max) | 174 fps (8-bit), 143 fps (10-bit), 62.8 fps (12-bit) |
| Digitization | 8-bit, 10-bit, 12-bit |
| Pixel clock rate | 37.125 MHz |
| Dynamic range | 77 dB |
| Shutter speed | 5 µs to 16.0 s |
| Analog / Digital gain | 0–48 dB (0.1 dB step) |
| Digital gain | 1x (0 dB) to 4x (12 dB), 0.001x step |
| AEC/AGC | Yes |
| Black level offset | Manual (0–255), auto |
| Exposure control | Manual, auto, external, off |
| Binning | 1x2, 2x1 and 2x2 (available in monochrome cameras only) |
| Sub-sampling | 1x2, 2x1 and 2x2 |
| White balance | Once, manual, auto, off |
| Area of interest (AOI) | Two |
| Trigger inputs | External, pulse generator, software, computer |
| Trigger options | Edge, overlap, pulse width, trigger filter, trigger delay, debounce |
| Trigger modes | Free-run, standard, fast |
| I/O control | 2 IN (OPTO, LVTTL) / 1 OUT (OPTO) |
| Strobe output | 1 strobe, programmable position and duration |
| Pulse generator | Yes, programmable |
| Lens mount | C-mount (default), P-Iris (optional) |
| Camera housing | 6000 series aluminum |
| Upgradeable firmware | Yes |
| Data correction | 4 LUTs pre-programmed with Gamma 0.45, BPC (static, dynamic), FFC |
| Supply voltage range | 12 VDC (6 V–30 V), 1.5 A inrush @ 12 V |
| Power consumption | Typical: 2.4 W @ 12 V |
| Camera size (W x H x L) | 37.0 mm x 37.0 mm x 47.2 mm |
| Weight | 87 g |
| Vibration, shock | Complies with IEC60068-2-64 and IEC60068-2-27 |
| Environmental | -30 °C to +75 °C Operating;<br>-40 °C to +85 °C Storage |
| Relative humidity | 10% to 90% non-condensing |
| Regulatory | CE, RoHS, UKCA;<br>C1921-M camera is considered a board level assembly.<br>FCC Part 15 Class A testing in the final enclosure is the customer's responsibility. |
| MTBF | 530,000 hours @ 50 °C (Telcordia SR-332) (EST) |

# C2020 and C2020-H Cameras Specifications

| Specifications | | C2020 and C2020-H (3.1 MP) |
|---|---|---|
| Active image resolution | | 2064 (H) x 1544 (V) |
| Pixel size | | 3.45 µm |
| Optical format | | 1/1.8 inch |
| Shutter | | Global shutter (GS) |
| Frame rate (max) | | 148 (8-bit), 121 (10-bit), 54 (12-bit) |
| Digitization | | 8-bit, 10-bit, 12-bit |
| Pixel clock rate | | 37.125 MHz |
| Dynamic range | | 71 dB |
| Shutter speed | | 14 µs to 16.0 s |
| Analog / Digital gain | | 0–48 dB (0.1 dB step) |
| Digital gain | | 1x (0 dB) to 4x (12 dB), 0.001x step |
| AEC/AGC | | Yes |
| Black level offset | | Manual (0–255), auto |
| Exposure control | | Manual, auto, external, off |
| Binning | | 1x2, 2x1 and 2x2 (available in monochrome cameras only) |
| Sub-sampling | | 1x2, 2x1 and 2x2 |
| White balance | | Once, manual, auto, off |
| Area of interest (AOI) | | Two |
| Trigger inputs | | External, pulse generator, software, computer |
| Trigger options | | Edge, overlap, pulse width, trigger filter, trigger delay, debounce |
| Trigger modes | | Free-run, standard, fast |
| I/O control | | 2 IN (OPTO, LVTTL) / 2 OUT (OPTO, TTL) |
| Strobe output | | 2 strobes, programmable position and duration |
| Pulse generator | | Yes, programmable |
| Lens mount | | C-mount (default), P-Iris (optional) |
| Camera housing | | 6000 series aluminum |
| Upgradeable firmware | | Yes |
| Data correction | | 4 LUTs pre-programmed with Gamma 0.45, bad pixel correction (static, dynamic), flat field correction |
| Heater control | **C2020-H** | Heater turns On below -30 °C; Heater turns Off above -20 °C<br>10 °C (fixed) hysteresis |
| Supply voltage range | **C2020** | 12 V DC (6 V–30 V), 1.5 A inrush @ 12 V |
| | **C2020-H** | 12 V DC (10 V–20 V), 1.5 A inrush @ 12 V |
| Power consumption | **C2020** | Typical: 2.4 W @ 12 V |
| | **C2020-H** | 6 W @ 12 V to 10.5 W @ 18 V (heater is On); 2.4 W @ 12 V (heater is Off)<br>Heater power dissipation varies with input supply voltage from 3.6 W @12 V to 8.1 W @18 V |
| Camera size (W x H x L) | | 37.0 mm x 37.0 mm x 47.2 mm |
| Weight | | 103.4 g |
| Vibration, shock | | Complies with IEC60068-2-64 and IEC60068-2-27 |
| Environmental | **C2020** | -30 °C to +75 °C Operating; -40 °C to +85 °C Storage |
| | **C2020-H** | -50 °C to +75 °C Operating; -40 °C to +85 °C Storage |
| Relative humidity | | 10% to 90% non-condensing |
| Regulatory | | FCC part 15 Class A, CE, RoHS, UKCA |
| MTBF | **C2020** | 530,000 hours @ 50 °C (Telcordia SR-332) (EST) |
| | **C2020-H** | 500,000 hours @ 50 °C (Telcordia SR-332) (EST) |

# C2020-M Camera Specifications

| Specifications | C2020-M (3.1 MP) (with a 50-pin I-PEX 20682-050E-02 connector) |
|---|---|
| Active image resolution | 2064 (H) x 1544 (V) |
| Pixel size | 3.45 µm |
| Optical format | 1/1.8 inch |
| Shutter | Global |
| Frame rate (max) | 148 (8-bit), 121 (10-bit), 54 (12-bit) |
| Digitization | 8-bit, 10-bit, 12-bit |
| Pixel clock rate | 37.125 MHz |
| Dynamic range | 71 dB |
| Shutter speed | 14 µs to 16.0 s |
| Analog / Digital gain | 0–48 dB (0.1 dB step) |
| Digital gain | 1x (0 dB) to 4x (12 dB), 0.001x step |
| AEC/AGC | Yes |
| Black level offset | Manual (0–255), auto |
| Exposure control | Manual, auto, external, off |
| Binning | 1x2, 2x1 and 2x2 (available in monochrome cameras only) |
| Sub-sampling | 1x2, 2x1 and 2x2 |
| White balance | Once, manual, auto, off |
| Area of interest (AOI) | Two |
| Trigger inputs | External, pulse generator, software, computer |
| Trigger options | Edge, overlap, pulse width, trigger filter, trigger delay, debounce |
| Trigger modes | Free-run, standard, fast |
| I/O control | 2 IN (OPTO, LVTTL) / 1 OUT (OPTO) |
| Strobe output | 1 strobe, programmable position and duration |
| Pulse generator | Yes, programmable |
| Lens mount | C-mount (default), P-Iris (optional) |
| Camera housing | 6000 series aluminum |
| Upgradeable firmware | Yes |
| Data correction | 4 LUTs pre-programmed with Gamma 0.45, bad pixel correction (static, dynamic), flat field correction |
| Supply voltage range | 12 V DC (6 V–30 V), 1.5 A inrush @ 12 V |
| Power consumption | Typical: 2.4 W @ 12 V |
| Camera size (W x H x L) | 37.0 mm x 37.0 mm x 47.2 mm |
| Weight | 87 g |
| Vibration, shock | Complies with IEC60068-2-64 and IEC60068-2-27 |
| Environmental | -30 °C to +75 °C Operating;<br>-40 °C to +85 °C Storage |
| Relative humidity | 10% to 90% non-condensing |
| Regulatory | CE, RoHS, UKCA;<br>C2020-M camera is considered a board level assembly.<br>FCC Part 15 Class A testing in the final enclosure is the customer's responsibility. |
| MTBF | 530,000 hours @ 50 °C (Telcordia SR-332) (EST) |

# C2420 and C2420-H Cameras Specifications

| Specifications | | C2420 and C2420-H (5 MP) |
|---|---|---|
| Active image resolution | | 2464 (H) x 2056 (V) |
| Pixel size | | 3.45 µm |
| Optical format | | 2/3 inch |
| Shutter | | Global shutter (GS) |
| Frame rate (max) | | 97 fps (8-bit), 79 fps (10-bit), 35 fps (12-bit) |
| Digitization | | 8-bit, 10-bit, 12-bit |
| Pixel clock rate | | 37.125 MHz |
| Dynamic range | | 71 dB |
| Shutter speed | | 14 µs to 16.0 s |
| Analog / Digital gain | | 0–48 dB (0.1 dB step) |
| Digital gain | | 1x (0 dB) to 4x (12 dB), 0.001x step |
| AEC/AGC | | Yes |
| Black level offset | | Manual (0–255), auto |
| Exposure control | | Manual, auto, external, off |
| Binning | | 1x2, 2x1 and 2x2 (available in monochrome cameras only) |
| Sub-sampling | | 1x2, 2x1 and 2x2 |
| White balance | | Once, manual, auto, off |
| Area of interest (AOI) | | Two |
| Trigger inputs | | External, pulse generator, software, computer |
| Trigger options | | Edge, overlap, pulse width, trigger filter, trigger delay, debounce |
| Trigger modes | | Free-run, standard, fast |
| I/O control | | 2 IN (OPTO, LVTTL) / 2 OUT (OPTO, TTL) |
| Strobe output | | 2 strobes, programmable position and duration |
| Pulse generator | | Yes, programmable |
| Lens mount | | C-mount (default), P-Iris (optional) |
| Camera housing | | 6000 series aluminum |
| Upgradeable firmware | | Yes |
| Data correction | | 4 LUTs pre-programmed with Gamma 0.45, bad pixel correction (static, dynamic), flat field correction |
| Heater control | **C2420-H** | Heater turns On below -30 °C; Heater turns Off above -20 °C<br>10 °C (fixed) hysteresis |
| Supply voltage range | **C2420** | 12 V DC (6 V–30 V), 1.5 A inrush @12 V |
| | **C2420-H** | 12 V DC (10 V–20 V), 1.5 A inrush @ 12 V |
| Power consumption | **C2420** | Typical: 2.4 W @ 12 V |
| | **C2420-H** | 6 W @12 V to 10.5 W @ 18 V (heater is On); 2.4 W @ 12 V (heater is Off)<br>Heater power dissipation varies with input supply voltage from 3.6 W @12 V to 8.1 W @18 V |
| Camera size (W x H x L) | | 37.0 mm x 37.0 mm x 47.2 mm |
| Weight | | 103.4 g |
| Vibration, shock | | Complies with IEC60068-2-64 and IEC60068-2-27 |
| Environmental | **C2420** | -30 °C to +75 °C Operating; -40 °C to +85 °C Storage |
| | **C2420-H** | -50 °C to +75 °C Operating; -40 °C to +85 °C Storage |
| Relative humidity | | 10% to 90% non-condensing |
| Regulatory | | FCC part 15, CE, RoHS, UKCA |
| MTBF | **C2420** | 530,000 hours @ 50 °C (Telcordia SR-332) (EST) |
| | **C2420-H** | 500,000 hours @ 50 °C (Telcordia SR-332) (EST) |

# C2420-M Camera Specifications

| Specifications | C2420 and C2420-M (5 MP) (with a 50-pin I-PEX 20682-050E-02 connector) |
|---|---|
| Active image resolution | 2464 (H) x 2056 (V) |
| Pixel size | 3.45 µm |
| Optical format | 2/3 inch |
| Shutter | Global |
| Frame rate (max) | 97 fps (8-bit), 79 fps (10-bit), 35 fps (12-bit) |
| Digitization | 8-bit, 10-bit, 12-bit |
| Pixel clock rate | 37.125 MHz |
| Dynamic range | 71 dB |
| Shutter speed | 14 µs to 16.0 s |
| Analog / Digital gain | 0–48 dB (0.1 dB step) |
| Digital gain | 1x (0 dB) to 4x (12 dB), 0.001x step |
| AEC/AGC | Yes |
| Black level offset | Manual (0–255), auto |
| Exposure control | Manual, auto, external, off |
| Binning | 1x2, 2x1 and 2x2 (available in monochrome cameras only) |
| Sub-sampling | 1x2, 2x1 and 2x2 |
| White balance | Once, manual, auto, off |
| Area of interest (AOI) | Two |
| Trigger inputs | External, pulse generator, software, computer |
| Trigger options | Edge, overlap, pulse width, trigger filter, trigger delay, debounce |
| Trigger modes | Free-run, standard, fast |
| I/O control | 2 IN (OPTO, LVTTL) / 1 OUT (OPTO) |
| Strobe output | 1 strobe, programmable position and duration |
| Pulse generator | Yes, programmable |
| Minimum illumination | 0.2 lux, f=1.4 |
| Lens mount | C-mount (default), P-Iris (optional) |
| Camera housing | 6000 series aluminum |
| Upgradeable firmware | Yes |
| Data correction | 4 LUTs pre-programmed with Gamma 0.45, bad pixel correction (static, dynamic), flat field correction |
| Supply voltage range | 12 V DC (6V–30V), 1.5 A inrush @12 V |
| Power consumption | Typical: 2.4 W @ 12 V |
| Camera size (W x H x L) | 37.0 mm x 37.0 mm x 47.2 mm |
| Weight | 87 g |
| Vibration, shock | Complies with IEC60068-2-64 and IEC60068-2-27 |
| Environmental | -30 °C to +75 °C Operating; -40 °C to +85 °C Storage |
| Relative humidity | 10% to 90% non-condensing |
| Regulatory | CE, RoHS, UKCA;<br>C2420-M camera is considered a board level assembly.<br>FCC Part 15 Class A testing in the final enclosure is customer's responsibility. |
| MTBF | 530,000 hours @ 50 °C (Telcordia SR-332) (EST) |

# C2420Y/Z and C2420Y/Z-H Cameras with Micro-Polarizer

| Specifications | | C2420Y/Z and C2420Y/Z-H (5 MP) |
|---|---|---|
| Active image resolution | | 2464 (H) x 2056 (V); 1232 (H) x 1028 (V) per polarization angle |
| Pixel size | | 3.45 µm |
| Optical format | | 2/3 inch |
| Shutter | | Global |
| Frame rate (max) | | 97 fps (8-bit), 79 fps (10-bit), 35 fps (12-bit) |
| Digitization | | 8-bit, 10-bit, 12-bit |
| Pixel clock rate | | 37.125 MHz |
| Dynamic range | | 71 dB |
| Shutter speed | | 14 µs to 16.0 sec |
| Analog / Digital gain | | 0–48 dB (0.1 dB step) |
| Digital gain | | 1x (0 dB) to 4x (12 dB), 0.001x step |
| AEC/AGC | | Yes |
| Black level offset | | Manual (0–255), auto |
| Exposure control | | Manual, auto, external, off |
| Binning, Sub-sampling | | Not supported |
| Polarization angles | | 0, 45, 90, 135 degrees |
| White balance | | Once, manual, auto, off |
| Area of interest (AOI) | | Two |
| Trigger inputs | | External, pulse generator, software, computer |
| Trigger options | | Edge, overlap, pulse width, trigger filter, trigger delay, debounce |
| Trigger modes | | Free-run, standard, fast |
| I/O control | | 2 IN (OPTO, LVTTL) / 2 OUT (OPTO, TTL) |
| Strobe output | | 2 strobes, programmable position and duration |
| Pulse generator | | Yes, programmable |
| Lens mount | | C-mount (default), P-Iris (optional) |
| Camera housing | | 6000 series aluminum |
| Upgradeable firmware | | Yes |
| Data correction | | 4 LUTs pre-programmed with Gamma 0.45, bad pixel correction (static, dynamic), flat field correction |
| Heater control | **C2420Y/Z-H** | Heater turns On below -30 °C; Heater turns Off above -20 °C<br>10 °C (fixed) hysteresis |
| Supply voltage range | **C2420Y/Z** | 12 V DC (6 V–30 V), 1.5 A inrush @ 12 V |
| | **C2420Y/Z-H** | 12 V DC (10 V–20 V), 1.5 A inrush @ 12 V |
| Power consumption | **C2420Y/Z** | Typical: 2.4 W @12 V |
| | **C2420Y/Z-H** | 6 W @ 12 V to 10.5 W @ 18 V (heater is On); 2.4 W @12 V (heater is Off)<br>Heater power dissipation varies with input supply voltage from 3.6 W @12 V to 8.1 W @18 V |
| Camera size (W x H x L) | | 37.0 mm x 37.0 mm x 47.2 mm |
| Weight | | 103.4 g |
| Vibration, shock | | Complies with IEC60068-2-64 and IEC60068-2-27 |
| Environmental | **C2420Y/Z** | -30 °C to +75 °C Operating; -40 °C to +85 °C Storage |
| | **C2420Y/Z-H** | -50 °C to +75 °C Operating; -40 °C to +85 °C Storage |
| Relative humidity | | 10% to 90% non-condensing |
| Regulatory | | FCC part 15 Class A, CE, RoHS, UKCA |
| MTBF | **C2420Y/Z** | 530,000 hours @ 50 °C (Telcordia SR-332) (EST) |
| | **C2420Y/Z-H** | 500,000 hours @ 50 °C (Telcordia SR-332) (EST) |

# C2420Y/Z-M Camera with Micro-Polarizer

| Specifications | C2420Y/Z-M (5 MP) (with a 50-pin I-PEX 20682-050E-02 connector) |
|---|---|
| Active image resolution | 2464 (H) x 2056 (V); 1232 (H) x 1028 (V) per polarization angle |
| Pixel size | 3.45 µm |
| Optical format | 2/3 inch |
| Shutter | Global |
| Frame rate (max) | 97 fps (8-bit), 79 fps (10-bit), 35 fps (12-bit) |
| Digitization | 8-bit, 10-bit, 12-bit |
| Pixel clock rate | 37.125 MHz |
| Dynamic range | 71 dB |
| Shutter speed | 14 µs to 16.0 sec |
| Analog / Digital gain | 0–48 dB (0.1 dB step) |
| Digital gain | 1x (0 dB) to 4x (12 dB), 0.001x step |
| AEC/AGC | Yes |
| Black level offset | Manual (0–255), auto |
| Exposure control | Manual, auto, external, off |
| Binning, Sub-sampling | Not supported |
| Polarization angles | 0, 45, 90, 135 degrees |
| White balance | Once, manual, auto, off |
| Area of interest (AOI) | Two |
| Trigger inputs | External, pulse generator, software, computer |
| Trigger options | Edge, overlap, pulse width, trigger filter, trigger delay, debounce |
| Trigger modes | Free-run, standard, fast |
| I/O control | 2 IN (OPTO, LVTTL) / 1 OUT (OPTO) |
| Strobe output | 1 strobe, programmable position and duration |
| Pulse generator | Yes, programmable |
| Lens mount | C-mount (default), P-Iris (optional) |
| Camera housing | 6000 series aluminum |
| Upgradeable firmware | Yes |
| Data correction | 4 LUTs pre-programmed with Gamma 0.45, bad pixel correction (static, dynamic), flat field correction |
| Supply voltage range | 12 V DC (6 V–30 V), 1.5 A inrush @ 12 V |
| Power consumption | Typical: 2.4 W @12 V |
| Camera size (W x H x L) | 37.0 mm x 37.0 mm x 47.2 mm |
| Weight | 87 g |
| Vibration, shock | Complies with IEC60068-2-64 and IEC60068-2-27 |
| Environmental | -30 °C to +75 °C Operating;<br>-40 °C to +85 °C Storage |
| Relative humidity | 10% to 90% non-condensing |
| Regulatory | CE, RoHS, UKCA;<br>C2420Y/Z-M camera is considered a board level assembly.<br>FCC Part 15 Class A testing in the final enclosure is the customer's responsibility. |
| MTBF | 530,000 hours @ 50 °C (Telcordia SR-332) (EST) |

# C2820 and C2820-H Cameras Specifications

| Specifications | | C2820 and C2820-M (8.1 MP) |
|---|---|---|
| Active image resolution | | 2856 (H) x 2848 (V) |
| Pixel size | | 2.74 µm |
| Optical format | | 2/3 inch |
| Shutter | | Global |
| Frame rate (max) | | 59 fps (8-bit), 48 fps (10-bit), 40 fps (12-bit) |
| Digitization | | 8-bit, 10-bit, 12-bit |
| Pixel clock rate | | 37.125 MHz |
| Dynamic range | | 71 dB |
| Shutter speed | | 8 µs to 16.0 s |
| Analog / Digital gain | | 0–48 dB (0.1 dB step) |
| Digital gain | | 1x (0 dB) to 4x (12 dB), 0.001x step |
| AEC/AGC | | Yes |
| Black level offset | | Manual (0–255), auto |
| Exposure control | | Manual, auto, external, off |
| Binning | | 1x1, 2x2 |
| Sub-sampling | | 1x1, 2x2 |
| White balance | | Once, manual, auto, off |
| Area of interest (AOI) | | Two |
| Trigger Inputs | | External, pulse generator, software, computer |
| Trigger options | | Edge, overlap, pulse width, trigger filter, trigger delay, debounce |
| Trigger modes | | Free-run, standard, fast |
| I/O control | | 2 IN (OPTO, LVTTL) / 2 OUT (OPTO, TTL) |
| Strobe output | | 2 strobes, programmable position and duration |
| Pulse generator | | Yes, programmable |
| Lens mount | | C-mount (default), P-Iris (optional) |
| Camera housing | | 6000 series aluminum |
| Upgradeable firmware | | Yes |
| Data correction | | 4 LUTs pre-programmed with Gamma 0.45, bad pixel correction (static, dynamic), flat field correction |
| Heater control | **C2820-H** | Heater turns On below -30 °C; Heater turns Off above -20 °C<br>10 °C (fixed) hysteresis |
| Supply voltage range | **C2820** | 12 V DC (6 V–30 V), 1.5 A inrush @ 12 V |
| | **C2820-H** | 12 V DC (10 V–20 V), 1.5 A inrush @ 12 V |
| Power consumption | **C2820** | Typical: 2.4 W @ 12 V |
| | **C2820-H** | 6 W @ 12 V to 10.5 W @ 18 V (heater is On); 2.4 W @ 12 V (heater is Off)<br>Heater power dissipation varies with input supply voltage from 3.6 W @12 V to 8.1 W @18 V |
| Camera size (W x H x L) | | 37.0 mm x 37.0 mm x 47.2 mm |
| Weight | | 103.4 g |
| Vibration, shock | | 20G (20–200 Hz XYZ) / 100G |
| Environmental | **C2820** | -30 °C to +75 °C Operating; -40 °C to +85 °C Storage |
| | **C2820-H** | -50 °C to +75 °C Operating; -40 °C to +85 °C Storage |
| Relative humidity | | 10% to 90% non-condensing |
| Regulatory | | FCC part 15 Class A, CE, RoHS, UKCA |
| MTBF | | Not Specified (UV illumination inherently damages the image sensor increasing image sensor dark current with dose. The amount of damage and the useful life of the image sensor is dependent upon the radiant power and duration. For more information, contact Imperx.) |

# C2820-M Camera Specifications

| Specifications | C2820-M (8.1 MP) (with a 50-pin I-PEX 20682-050E-02 connector) |
|---|---|
| Active image resolution | 2856 (H) x 2848 (V) |
| Pixel size | 2.74 µm |
| Optical format | 2/3 inch |
| Shutter | Global |
| Frame rate (max) | 59 fps (8-bit), 48 fps (10-bit), 40 fps (12-bit) |
| Digitization | 8-bit, 10-bit, 12-bit |
| Pixel clock rate | 37.125 MHz |
| Dynamic range | 71 dB |
| Shutter speed | 8 µs to 16.0 s |
| Analog / Digital gain | 0–48 dB (0.1 dB step) |
| Digital gain | 1x (0 dB) to 4x (12 dB), 0.001x step |
| AEC/AGC | Yes |
| Black level offset | Manual (0–255), auto |
| Exposure control | Manual, auto, external, off |
| Binning | 1x1, 2x2 (available in monochrome cameras only) |
| Sub-sampling | 1x1, 2x2 |
| White balance | Once, manual, auto, off |
| Area of interest (AOI) | Two |
| Trigger Inputs | External, pulse generator, software, computer |
| Trigger options | Edge, overlap, pulse width, trigger filter, trigger delay, debounce |
| Trigger modes | Free-run, standard, fast |
| I/O control | 2 IN (OPTO, LVTTL) / 1 OUT (OPTO) |
| Strobe output | 1 strobe, programmable position and duration |
| Pulse generator | Yes, programmable |
| Lens mount | C-mount (default), P-Iris (optional) |
| Camera housing | 6000 series aluminum |
| Upgradeable firmware | Yes |
| Data correction | 4 LUTs pre-programmed with Gamma 0.45, bad pixel correction (static, dynamic), flat field correction |
| Supply voltage range | 12 V DC (6 V–30 V), 1.5 A inrush @ 12 V |
| Power consumption | Typical: 2.4 W @ 12 V |
| Camera size (W x H x L) | 37.0 mm x 37.0 mm x 47.2 mm |
| Weight | 87 g |
| Vibration, shock | 20G (20–200 Hz XYZ) / 100G |
| Environmental | -30 °C to +75 °C Operating; -40 °C to +85 °C Storage |
| Relative humidity | 10% to 90% non-condensing |
| Regulatory | CE, RoHS, UKCA;<br>C2820-M camera is considered a board level assembly.<br>FCC Part 15 Class A testing in the final enclosure is the customer's responsibility. |
| MTBF | Not Specified (UV illumination inherently damages the image sensor increasing image sensor dark current with dose. The amount of damage and the useful life of the image sensor is dependent upon the radiant power and duration. For more information, contact Imperx.) |

# C3220 and C3220-H Cameras Specifications

| Specifications | | C3220 and C3220-M (7.1 MP) |
|---|---|---|
| Active image resolution | | 3216 (H) x 2208 (V) |
| Pixel size | | 4.5 µm |
| Optical format | | 1.1 inch |
| Shutter | | Global |
| Frame rate (max) | | 74 fps (8-bit), 60 fps (10-bit), 26 fps (12-bit) |
| Digitization | | 8-bit, 10-bit, 12-bit |
| Pixel clock rate | | 37.125 MHz |
| Dynamic range | | 77 dB |
| Shutter speed | | 5 µs to 16.0 s |
| Analog / Digital gain | | 0–48 dB (0.1 dB step) |
| Digital gain | | 1x (0 dB) to 4x (12 dB), 0.001x step |
| AEC/AGC | | Yes |
| Black level offset | | Manual (0–255), auto |
| Exposure control | | Manual, auto, external, off |
| Binning | | 1x2, 2x1 and 2x2 (available in monochrome cameras only) |
| Sub-sampling | | 1x2, 2x1 and 2x2 |
| White balance | | Once, manual, auto, off |
| Area of interest (AOI) | | Two |
| Trigger Inputs | | External, pulse generator, software, computer |
| Trigger options | | Edge, overlap, pulse width, trigger filter, trigger delay, debounce |
| Trigger modes | | Free-run, standard, fast |
| I/O control | | 2 IN (OPTO, LVTTL) / 2 OUT (OPTO, TTL) |
| Strobe output | | 2 strobes, programmable position and duration |
| Pulse generator | | Yes, programmable |
| Lens mount | | C-mount (default), P-Iris (optional) |
| Camera housing | | 6000 series aluminum |
| Upgradeable firmware | | Yes |
| Data correction | | 4 LUTs pre-programmed with Gamma 0.45, bad pixel correction (static, dynamic), flat field correction |
| Heater control | **C3220-H** | Heater turns On below -30 °C; Heater turns Off above -20 °C<br>10 °C (fixed) hysteresis |
| Supply voltage range | **C3220** | 12 V DC (6 V–30 V), 1.5 A inrush @ 12 V |
| | **C3220-H** | 12 V DC (10 V–20 V), 1.5 A inrush @ 12 V |
| Power consumption | **C3220** | Typical: 2.4 W @ 12 V |
| | **C3220-H** | 6 W @ 12 V to 10.5 W @ 18 V (heater is On); 2.4 W @ 12 V (heater is Off)<br>Heater power dissipation varies with input supply voltage from 3.6 W @12 V to 8.1 W @18 V |
| Camera size (W x H x L) | | 37.0 mm x 37.0 mm x 47.2 mm |
| Weight | | 103.4 g |
| Vibration, shock | | 20G (20–200 Hz XYZ) / 100G |
| Environmental | **C3220** | -30 °C to +75 °C Operating; -40 °C to +85 °C Storage |
| | **C3220-H** | -50 °C to +75 °C Operating; -40 °C to +85 °C Storage |
| Relative humidity | | 10% to 90% non-condensing |
| Regulatory | | FCC part 15 Class A, CE, RoHS, UKCA |
| MTBF | **C3220** | 530,000 hours @ 50 °C (Telcordia SR-332) (EST) |
| | **C3220-H** | 500,000 hours @ 50 °C (Telcordia SR-332) (EST) |

# C3220-M Camera Specifications

| Specifications | C3220-M (7.1 MP) (with a 50-pin I-PEX 20682-050E-02 connector) |
|---|---|
| Active image resolution | 3216 (H) x 2208 (V) |
| Pixel size | 4.5 µm |
| Optical format | 1.1 inch |
| Shutter | Global |
| Frame rate (max) | 74 fps (8-bit), 60 fps (10-bit), 26 fps (12-bit) |
| Digitization | 8-bit, 10-bit, 12-bit |
| Pixel clock rate | 37.125 MHz |
| Dynamic range | 77 dB |
| Shutter speed | 5 µs to 16.0 s |
| Analog / Digital gain | 0–48 dB (0.1 dB step) |
| Digital gain | 1x (0 dB) to 4x (12 dB), 0.001x step |
| AEC/AGC | Yes |
| Black level offset | Manual (0–255), auto |
| Exposure control | Manual, auto, external, off |
| Binning | 1x2, 2x1 and 2x2 (available in monochrome cameras only) |
| Sub-sampling | 1x2, 2x1 and 2x2 |
| White balance | Once, manual, auto, off |
| Area of interest (AOI) | Two |
| Trigger Inputs | External, pulse generator, software, computer |
| Trigger options | Edge, overlap, pulse width, trigger filter, trigger delay, debounce |
| Trigger modes | Free-run, standard, fast |
| I/O control | 2 IN (OPTO, LVTTL) / 1 OUT (OPTO) |
| Strobe output | 1 strobe, programmable position and duration |
| Pulse generator | Yes, programmable |
| Lens mount | C-mount (default), P-Iris (optional) |
| Camera housing | 6000 series aluminum |
| Upgradeable firmware | Yes |
| Data correction | 4 LUTs pre-programmed with Gamma 0.45, bad pixel correction (static, dynamic), flat field correction |
| Supply voltage range | 12 V DC (6 V–30 V), 1.5 A inrush @ 12 V |
| Power consumption | Typical: 2.4 W @ 12 V |
| Camera size (W x H x L) | 37.0 mm x 37.0 mm x 47.2 mm |
| Weight | 87 g |
| Vibration, shock | 20G (20–200 Hz XYZ) / 100G |
| Environmental | -30 °C to +75 °C Operating; -40 °C to +85 °C Storage |
| Relative humidity | 10% to 90% non-condensing |
| Regulatory | CE, RoHS, UKCA;<br>C3220-M camera is considered a board level assembly.<br>FCC Part 15 Class A testing in the final enclosure is the customer's responsibility. |
| MTBF | 530,000 hours @ 50 °C (Telcordia SR-332) (EST) |

# C4020 and C4020-H Cameras Specifications

| Specifications | | C4020 and C4020-H (9 MP) |
|---|---|---|
| Active image resolution | | 4112 (H) x 2176 (V) |
| Pixel size | | 3.45 µm |
| Optical format | | 1 inch |
| Shutter | | Global |
| Frame rate (max) | | 57 fps (8-bit), 47 fps (10-bit), 20 fps (12-bit) |
| Digitization | | 8-bit, 10-bit, 12-bit |
| Pixel Clock rate | | 37.125 MHz |
| Dynamic range | | 71 dB |
| Shutter speed | | 14 µs to 16.0 s |
| Analog / Digital gain | | 0–48 dB (0.1 dB step) |
| Digital gain | | 1x (0 dB) to 4x (12 dB), 0.001x step |
| AEC/AGC | | Yes |
| Black level offset | | Manual (0–255), auto |
| Exposure control | | Manual, auto, external, off |
| Binning | | 1x2, 2x1 and 2x2 (available in monochrome cameras only) |
| Sub-sampling | | 1x2, 2x1 and 2x2 |
| White balance | | Once, manual, auto, off |
| Area of interest (AOI) | | Two |
| Trigger Inputs | | External, pulse generator, software, computer |
| Trigger options | | Edge, overlap, pulse width, trigger filter, trigger delay, debounce |
| Trigger modes | | Free-run, standard, fast |
| I/O control | | 2 IN (OPTO, LVTTL) / 2 OUT (OPTO, TTL) |
| Strobe output | | 2 strobes, programmable position and duration |
| Pulse generator | | Yes, programmable |
| Lens mount | | C-mount (default), P-Iris (optional) |
| Camera housing | | 6000 series aluminum |
| Upgradeable firmware | | Yes |
| Data correction | | 4 LUTs pre-programmed with Gamma 0.45, bad pixel correction (static, dynamic), flat field correction |
| Heater control | **C4020-H** | Heater turns On below -30 °C; Heater turns Off above -20 °C<br>10 °C (fixed) hysteresis |
| Supply voltage range | **C4020** | 12 V DC (6 V–30 V), 1.5 A inrush @ 12 V |
| | **C4020-H** | 12 V DC (10 V–20 V), 1.5 A inrush @ 12 V |
| Power consumption | **C4020** | Typical: 2.4 W @ 12 V |
| | **C4020-H** | 6 W @ 12 V to 10.5 W @ 18 V (heater is On); 2.4 W @ 12 V (heater is Off)<br>Heater power dissipation varies with input supply voltage from 3.6 W @12 V to 8.1 W @18 V |
| Camera size (W x H x L) | | 37.0 mm x 37.0 mm x 47.2 mm |
| Weight | | 103.4 g |
| Vibration, shock | | Complies with IEC60068-2-64 and IEC60068-2-27 |
| Environmental | **C4020** | -30 °C to +75 °C Operating; -40 °C to +85 °C Storage |
| | **C4020-H** | -50 °C to +75 °C Operating; -40 °C to +85 °C Storage |
| Relative humidity | | 10% to 90% non-condensing |
| Regulatory | | FCC part 15 Class A, CE, RoHS, UKCA |
| MTBF | **C4020** | 530,000 hours @ 50 °C (Telcordia SR-332) (EST) |
| | **C4020-H** | 500,000 hours @ 50 °C (Telcordia SR-332) (EST) |

# C4020-M Camera Specifications

| Specifications | C4020-M (9 MP) (with a 50-pin I-PEX 20682-050E-02 connector) |
|---|---|
| Active image resolution | 4112 (H) x 2176 (V) |
| Pixel size | 3.45 µm |
| Optical format | 1 inch |
| Shutter | Global |
| Frame rate (max) | 57 fps (8-bit), 47 fps (10-bit), 20 fps (12-bit) |
| Digitization | 8-bit, 10-bit, 12-bit |
| Pixel Clock rate | 37.125 MHz |
| Dynamic range | 71 dB |
| Shutter speed | 14 µs to 16.0 s |
| Analog / Digital gain | 0–48 dB (0.1 dB step) |
| Digital gain | 1x (0 dB) to 4x (12 dB), 0.001x step |
| AEC/AGC | Yes |
| Black level offset | Manual (0–255), auto |
| Exposure control | Manual, auto, external, off |
| Binning | 1x2, 2x1 and 2x2 (available in monochrome cameras only) |
| Sub-sampling | 1x2, 2x1 and 2x2 |
| White balance | Once, manual, auto, off |
| Area of interest (AOI) | Two |
| Trigger Inputs | External, pulse generator, software, computer |
| Trigger options | Edge, overlap, pulse width, trigger filter, trigger delay, debounce |
| Trigger modes | Free-run, standard, fast |
| I/O control | 2 IN (OPTO, LVTTL) / 1 OUT (OPTO) |
| Strobe output | 1 strobe, programmable position and duration |
| Pulse generator | Yes, programmable |
| Lens mount | C-mount (default), P-Iris (optional) |
| Camera housing | 6000 series aluminum |
| Upgradeable firmware | Yes |
| Data correction | 4 LUTs pre-programmed with Gamma 0.45, bad pixel correction (static, dynamic), flat field correction |
| Supply voltage range | 12 V DC (6 V–30 V), 1.5 A inrush @ 12 V |
| Power consumption | Typical: 2.4 W @ 12 V |
| Camera size (W x H x L) | 37.0 mm x 37.0 mm x 47.2 mm |
| Weight | 87 g |
| Vibration, shock | Complies with IEC60068-2-64 and IEC60068-2-27 |
| Environmental | -30 °C to +75 °C Operating;<br>-40 °C to +85 °C Storage |
| Relative humidity | 10% to 90% non-condensing |
| Regulatory | CE, RoHS, UKCA;<br>C4020-M camera is considered a board level assembly.<br>FCC Part 15 Class A testing in the final enclosure is the customer's responsibility. |
| MTBF | 530,000 hours @ 50 °C (Telcordia SR-332) (EST) |

# C4120 and C4120-H Cameras Specifications

| Specifications | | C4120 and C4120-H (12 MP) |
|---|---|---|
| Active image resolution | | 4112 (H) x 3008 (V) |
| Pixel size | | 3.45 µm |
| Optical format | | 1.1 inch |
| Shutter | | Global |
| Frame rate (max) | | 42 fps (8-bit), 34 fps (10-bit), 14 fps (12-bit) |
| Digitization | | 8-bit, 10-bit, 12-bit |
| Pixel Clock rate | | 37.125 MHz |
| Dynamic range | | 71 dB |
| Shutter speed | | 14 µs to 16.0 s |
| Analog / Digital gain | | 0–48 dB (0.1 dB step) |
| Digital gain | | 1x (0 dB) to 4x (12 dB), 0.001x step |
| AEC/AGC | | Yes |
| Black level offset | | Manual (0–255), auto |
| Exposure control | | Manual, auto, external, off |
| Binning | | 1x2, 2x1 and 2x2 (available in monochrome cameras only) |
| Sub-sampling | | 1x2, 2x1 and 2x2 |
| White balance | | Once, manual, auto, off |
| Area of interest (AOI) | | Two |
| Trigger Inputs | | External, pulse generator, software, computer |
| Trigger options | | Edge, overlap, pulse width, trigger filter, trigger delay, debounce |
| Trigger modes | | Free-run, standard, fast |
| I/O control | | 2 IN (OPTO, LVTTL) / 2 OUT (OPTO, TTL) |
| Strobe output | | 2 strobes, programmable position and duration |
| Pulse generator | | Yes, programmable |
| Lens mount | | C-mount (default), P-Iris (optional) |
| Camera housing | | 6000 series aluminum |
| Upgradeable firmware | | Yes |
| Data correction | | 4 LUTs pre-programmed with Gamma 0.45, bad pixel correction (static, dynamic), flat field correction |
| Heater control | **C4120-H** | Heater turns On below -30 °C; Heater turns Off above -20 °C<br>10 °C (fixed) hysteresis |
| Supply voltage range | **C4120** | 12 V DC (6 V–30 V), 1.5 A inrush @ 12 V |
| | **C4120-H** | 12 V DC (10 V–20 V), 1.5 A inrush @ 12 V |
| Power consumption | **C4120** | Typical: 3 W @ 12 V |
| | **C4120-H** | 6.6 W @ 12 V to 11.1 W @ 18 V (heater is On); 3 W @ 12 V (heater is Off)<br>Heater power dissipation varies with input supply voltage from 3.6 W @12 V to 8.1 W @18 V |
| Camera size (W x H x L) | | 37.0 mm x 37.0 mm x 47.2 mm |
| Weight | | 103.4 g |
| Vibration, shock | | Complies with IEC60068-2-64 and IEC60068-2-27 |
| Environmental | **C4120** | -30 °C to +75 °C Operating; -40 °C to +85 °C Storage |
| | **C4120-H** | -50 °C to +75 °C Operating; -40 °C to +85 °C Storage |
| Relative humidity | | 10% to 90% non-condensing |
| Regulatory | | FCC part 15 Class A, CE, RoHS, UKCA |
| MTBF | **C4120** | 530,000 hours @ 50 °C (Telcordia SR-332) (EST) |
| | **C4120-H** | 500,000 hours @ 50 °C (Telcordia SR-332) (EST) |

# C4120-M Camera Specifications

| Specifications | C4120-M (12 MP) (with a 50-pin I-PEX 20682-050E-02 connector) |
|---|---|
| Active image resolution | 4112 (H) x 3008 (V) |
| Pixel size | 3.45 µm |
| Optical format | 1.1 inch |
| Shutter | Global |
| Frame rate (max) | 42 fps (8-bit), 34 fps (10-bit), 14 fps (12-bit) |
| Digitization | 8-bit, 10-bit, 12-bit |
| Pixel Clock rate | 37.125 MHz |
| Dynamic range | 71 dB |
| Shutter speed | 14 µs to 16.0 s |
| Analog / Digital gain | 0–48 dB (0.1 dB step) |
| Digital gain | 1x (0 dB) to 4x (12 dB), 0.001x step |
| AEC/AGC | Yes |
| Black level offset | Manual (0–255), auto |
| Exposure control | Manual, auto, external, off |
| Binning | 1x2, 2x1 and 2x2 (available in monochrome cameras only) |
| Sub-sampling | 1x2, 2x1 and 2x2 |
| White balance | Once, manual, auto, off |
| Area of interest (AOI) | Two |
| Trigger Inputs | External, pulse generator, software, computer |
| Trigger options | Edge, overlap, pulse width, trigger filter, trigger delay, debounce |
| Trigger modes | Free-run, standard, fast |
| I/O control | 2 IN (OPTO, LVTTL) / 1 OUT (OPTO) |
| Strobe output | 1 strobe, programmable position and duration |
| Pulse generator | Yes, programmable |
| Lens mount | C-mount (default), P-Iris (optional) |
| Camera housing | 6000 series aluminum |
| Upgradeable firmware | Yes |
| Data correction | 4 LUTs pre-programmed with Gamma 0.45, bad pixel correction (static, dynamic), flat field correction |
| Supply voltage range | 12 V DC (6 V–30 V), 1.5 A inrush @ 12 V |
| Power consumption | Typical: 3 W @ 12 V |
| Camera size (W x H x L) | 37.0 mm x 37.0 mm x 47.2 mm |
| Weight | 87 g |
| Vibration, shock | Complies with IEC60068-2-64 and IEC60068-2-27 |
| Environmental | -30 °C to +75 °C Operating;<br>-40 °C to +85 °C Storage |
| Relative humidity | 10% to 90% non-condensing |
| Regulatory | CE, RoHS, UKCA;<br>C4120-M camera is considered a board level assembly.<br>FCC Part 15 Class A testing in the final enclosure is the customer's responsibility. |
| MTBF | 530,000 hours @ 50 °C (Telcordia SR-332) (EST) |

# C4420 Camera Specifications

| Specifications | C4420 (20 MP) |
|---|---|
| Active image resolution | 4432 (H) x 4436 (V) |
| Pixel size | 3.45 µm |
| Optical format | 4/3 inch |
| Shutter | Global |
| Frame rate (max) | 28 fps (8-bit), 22 fps (10-bit), 19 fps (12-bit) |
| Digitization | 8-bit, 10-bit, 12-bit |
| Pixel clock rate | 37.125 MHz |
| Dynamic range | 71 dB |
| Shutter speed | 30 µs to 16.0 s |
| Analog / Digital gain | 0–48 dB (0.1 dB step) |
| Digital gain | 1x (0 dB) to 4x (12 dB), 0.001x step |
| AEC/AGC | Yes |
| Black level offset | Manual (0–255), auto |
| Exposure control | Manual, auto, external, off |
| Binning | 1x2, 2x1 and 2x2 (available in monochrome cameras only) |
| Sub-sampling | 1x2, 2x1 and 2x2 |
| White balance | Once, manual, auto, off |
| Area of interest (AOI) | Two |
| Trigger Inputs | External, pulse generator, software, computer |
| Trigger options | Edge, overlap, pulse width, trigger filter, trigger delay, debounce |
| Trigger modes | Free-run, standard, fast |
| I/O control | 2 IN (OPTO, LVTTL) / 2 OUT (OPTO, TTL) |
| Strobe output | 2 strobes, programmable position and duration |
| Pulse generator | Yes, programmable |
| Lens mount | F-mount (default), M42, Canon EF EOS active or passive (optional) |
| Camera housing | 6000 series aluminum |
| Upgradeable firmware | Yes |
| Data correction | 4 LUTs pre-programmed with Gamma 0.45, bad pixel correction (static, dynamic), flat field correction |
| Supply voltage range | 12 VDC (6 V–30 V), 1.5 A inrush @ 12 V |
| Power consumption | Typical: 4.2 W @ 12 V |
| Camera size (W x H x L) | 60 x 60 x 57 mm |
| Weight | 340 g |
| Vibration, shock | 20G (20–200 Hz XYZ) / 100G |
| Environmental | -30 °C to +75 °C Operating;<br>-40 °C to +85 °C Storage |
| Relative humidity | 10% to 90% non-condensing |
| Regulatory | FCC part 15 Class A, CE, RoHS, UKCA |
| MTBF | 452,000 hours @ 50 °C (Telcordia SR-332) (EST) |

# C4420-T Camera Specifications

| Specifications | C4420-T (20 MP) |
|---|---|
| Active image resolution | 4432 (H) x 4436 (V) |
| Pixel size | 3.45 µm |
| Optical format | 4/3 inch |
| Shutter | Global |
| Frame rate (max) | 28 fps (8-bit), 22 fps (10-bit), 19 fps (12-bit) |
| Digitization | 8-bit, 10-bit, 12-bit |
| Pixel clock rate | 37.125 MHz |
| Dynamic range | 71 dB |
| Shutter speed | 30 µs to 16.0 s |
| Analog / Digital gain | 0–48 dB (0.1 dB step) |
| Digital gain | 1x (0 dB) to 4x (12 dB), 0.001x step |
| AEC/AGC | Yes |
| Black level offset | Manual (0–255), auto |
| Exposure control | Manual, auto, external, off |
| Binning | 1x2, 2x1 and 2x2 (available in monochrome cameras only) |
| Sub-sampling | 1x2, 2x1 and 2x2 |
| White balance | Once, manual, auto, off |
| Area of interest (AOI) | Two |
| Trigger Inputs | External, pulse generator, software, computer |
| Trigger options | Edge, overlap, pulse width, trigger filter, trigger delay, debounce |
| Trigger modes | Free-run, standard, fast |
| I/O control | 2 IN (OPTO, LVTTL) / 2 OUT (OPTO, TTL) |
| Strobe output | 2 strobes, programmable position and duration |
| Pulse generator | Yes, programmable |
| TEC | Up to 20 °C below camera heat-sink temperature |
| TEC control | On, off, auto |
| Forced air cooling control | Auto |
| Lens mount | F-mount (default), M42, Canon EF EOS active or passive (optional) |
| Camera housing | 6000 series aluminum |
| Upgradeable firmware | Yes |
| Data correction | 4 LUTs pre-programmed with Gamma 0.45, bad pixel correction (static, dynamic), flat field correction |
| Supply voltage range | 12 VDC (6 V–30 V), 1.5 A inrush @ 12 V |
| Power consumption | TEC off: 350 mA @ 12 V;  TEC on: 750 mA @ 12 V;  TEC auto: 920 mA @ 12 V |
| Camera size (W x H x L) | 60.0 x 64.4 x 70.5 mm |
| Weight | 453 g |
| Vibration, shock | 20G (20–200 Hz XYZ) / 100G |
| Environmental | -30 °C to +75 °C Operating;<br>-40 °C to +85 °C Storage |
| Relative humidity | 10% to 90% non-condensing |
| Regulatory | FCC part 15 Class A, CE, RoHS, UKCA |
| MTBF | 378,000 hours @ 50 °C (Telcordia SR-332) (EST) |

# C4510 and C4510-H Cameras Specifications

| Specifications | | C4510 and C4510-H (20.4 MP) |
|---|---|---|
| Active image resolution | | 4512 (H) x 4512 (V) |
| Pixel size | | 2.74 µm |
| Optical format | | 1.1 inch |
| Shutter | | Global |
| Frame rate (max) | | 25.9 fps (8-bit), 20.8 fps (10-bit), 8.9 fps (12-bit) |
| Digitization | | 8-bit, 10-bit, 12-bit |
| Pixel Clock rate | | 37.125 MHz |
| Dynamic range | | 71 dB |
| Shutter speed | | 30 µs to 16.0 s |
| Analog / Digital gain | | 0–48 dB (0.1 dB step) |
| Digital gain | | 1x (0 dB) to 4x (12 dB), 0.001x step |
| AEC/AGC | | Yes |
| Black level offset | | Manual (0–255), auto |
| Exposure control | | Manual, auto, external, off |
| Binning | | 1x2, 2x1 and 2x2 (available in monochrome cameras only) |
| Sub-sampling | | 1x2, 2x1 and 2x2 |
| White balance | | Once, manual, auto, off |
| Area of interest (AOI) | | Two |
| Trigger Inputs | | External, pulse generator, software, computer |
| Trigger options | | Edge, overlap, pulse width, trigger filter, trigger delay, debounce |
| Trigger modes | | Free-run, standard, fast |
| I/O control | | 2 IN (OPTO, LVTTL) / 2 OUT (OPTO, TTL) |
| Strobe output | | 2 strobes, programmable position and duration |
| Pulse generator | | Yes, programmable |
| Lens mount | | C-mount (default), P-Iris (optional) |
| Camera housing | | 6000 series aluminum |
| Upgradeable firmware | | Yes |
| Data correction | | 4 LUTs pre-programmed with Gamma 0.45, bad pixel correction (static, dynamic), flat field correction |
| Heater control | **C4510-H** | Heater turns On below -30 °C; Heater turns Off above -20 °C<br>10 °C (fixed) hysteresis |
| Supply voltage range | **C4510** | 12 V DC (6 V–30 V), 1.5 A inrush @ 12 V |
| | **C4510-M** | 12 V DC (10 V–20 V), 1.5 A inrush @ 12 V |
| Power consumption | **C4510** | Typical: 2.64 W @ 12 V |
| | **C4510-M** | 6.24 W @ 12 V to 10.74 W @ 18 V (heater is On); 2.64 W @ 12 V (heater is Off)<br>Heater power dissipation varies with input supply voltage from 3.6 W @12 V to 8.1 W @18 V |
| Camera size (W x H x L) | | 37.0 mm x 37.0 mm x 47.2 mm |
| Weight | | 103.4 g |
| Vibration, shock | | Complies with IEC60068-2-64 and IEC60068-2-27 |
| Environmental | **C4510** | -30 °C to +75 °C Operating; -40 °C to +85 °C Storage |
| | **C4510-M** | -50 °C to +75 °C Operating; -40 °C to +85 °C Storage |
| Relative humidity | | 10% to 90% non-condensing |
| Regulatory | | FCC part 15 Class A, CE, RoHS, UKCA |
| MTBF | **C4510** | 530,000 hours @ 50 °C (Telcordia SR-332) (EST) |
| | **C4510-H** | 500,000 hours @ 50 °C (Telcordia SR-332) (EST) |

# C4510-M Camera Specifications

| Specifications | C4510-M (20.4 MP) (with a 50-pin I-PEX 20682-050E-02 connector) |
|---|---|
| Active image resolution | 4512 (H) x 4512 (V) |
| Pixel size | 2.74 µm |
| Optical format | 1.1 inch |
| Shutter | Global |
| Frame rate (max) | 25.9 fps (8-bit), 20.8 fps (10-bit), 8.9 fps (12-bit) |
| Digitization | 8-bit, 10-bit, 12-bit |
| Pixel Clock rate | 37.125 MHz |
| Dynamic range | 71 dB |
| Shutter speed | 30 µs to 16.0 s |
| Analog / Digital gain | 0–48 dB (0.1 dB step) |
| Digital gain | 1x (0 dB) to 4x (12 dB), 0.001x step |
| AEC/AGC | Yes |
| Black level offset | Manual (0–255), auto |
| Exposure control | Manual, auto, external, off |
| Binning | 1x2, 2x1 and 2x2 (available in monochrome cameras only) |
| Sub-sampling | 1x2, 2x1 and 2x2 |
| White balance | Once, manual, auto, off |
| Area of interest (AOI) | Two |
| Trigger Inputs | External, pulse generator, software, computer |
| Trigger options | Edge, overlap, pulse width, trigger filter, trigger delay, debounce |
| Trigger modes | Free-run, standard, fast |
| I/O control | 2 IN (OPTO, LVTTL) / 1 OUT (OPTO) |
| Strobe output | 1 strobe, programmable position and duration |
| Pulse generator | Yes, programmable |
| Lens mount | C-mount (default), P-Iris (optional) |
| Camera housing | 6000 series aluminum |
| Upgradeable firmware | Yes |
| Data correction | 4 LUTs pre-programmed with Gamma 0.45, bad pixel correction (static, dynamic), flat field correction |
| Supply voltage range | 12 V DC (6 V–30 V), 1.5 A inrush @ 12 V |
| Power consumption | Typical: 2.64 W @ 12 V |
| Camera size (W x H x L) | 37 x 37 x 47.2 mm |
| Weight | 87 g |
| Vibration, shock | Complies with IEC60068-2-64 and IEC60068-2-27 |
| Environmental | -30 °C to +75 °C Operating;<br>-40 °C to +85 °C Storage |
| Relative humidity | 10% to 90% non-condensing |
| Regulatory | CE, RoHS, UKCA;<br>C4510-M camera is considered a board level assembly.<br>FCC Part 15 Class A testing in the final enclosure is the customer's responsibility. |
| MTBF | 530,000 hours @ 50 °C (Telcordia SR-332) (EST) |

# C5310 and C5310-H Cameras Specifications

| Specifications | | C5310 and C5310-H (24.6 MP) |
|---|---|---|
| Active image resolution | | 5328 (H) x 4608 (V) |
| Pixel size | | 2.74 µm |
| Optical format | | 1.2 inch |
| Shutter | | Global |
| Frame rate (max) | | 21.7 fps (8-bit), 17.5 fps (10-bit), 7.5 fps (12-bit) |
| Digitization | | 8-bit, 10-bit, 12-bit |
| Pixel Clock rate | | 37.125 MHz |
| Dynamic range | | 71 dB |
| Shutter speed | | 30 µs to 16.0 s |
| Analog / Digital gain | | 0–48 dB (0.1 dB step) |
| Digital gain | | 1x (0 dB) to 4x (12 dB), 0.001x step |
| AEC/AGC | | Yes |
| Black level offset | | Manual (0–255), auto |
| Exposure control | | Manual, auto, external, off |
| Binning | | 1x2, 2x1 and 2x2 (available in monochrome cameras only) |
| Sub-sampling | | 1x2, 2x1 and 2x2 |
| White balance | | Once, manual, auto, off |
| Area of interest (AOI) | | Two |
| Trigger Inputs | | External, pulse generator, software, computer |
| Trigger options | | Edge, overlap, pulse width, trigger filter, trigger delay, debounce |
| Trigger modes | | Free-run, standard, fast |
| I/O control | | 2 IN (OPTO, LVTTL) / 2 OUT (OPTO, TTL) |
| Strobe output | | 2 strobes, programmable position and duration |
| Pulse generator | | Yes, programmable |
| Lens mount | | C-mount (default), P-Iris (optional) |
| Test image patterns | | Yes |
| Upgradeable firmware | | Yes |
| Data correction | | 4 LUTs pre-programmed with Gamma 0.45, bad pixel correction (static, dynamic), flat field correction |
| Heater control | **C5310-H** | Heater turns On below -30 °C; Heater turns Off above -20 °C<br>10 °C (fixed) hysteresis |
| Supply voltage range | **C5310** | 12 V DC (6 V–30 V), 1.5 A inrush @ 12 V |
| | **C5310-H** | 12 V DC (10 V–20 V), 1.5 A inrush @ 12 V |
| Power consumption | **C5310** | Typical: 2.64 W @ 12 V |
| | **C5310-H** | 6.24 W @ 12 V to 10.74 W @ 18 V (heater is On); 2.64 W @ 12 V (heater is Off)<br>Heater power dissipation varies with input supply voltage from 3.6 W @12 V to 8.1 W @18 V |
| Camera size (W x H x L) | | 37.0 mm x 37.0 mm x 47.2 mm |
| Weight | | 103.4 g |
| Vibration, shock | | Complies with IEC60068-2-64 and IEC60068-2-27 |
| Environmental | **C5310** | -30 °C to +75 °C Operating; -40 °C to +85 °C Storage |
| | **C5310-H** | -50 °C to +75 °C Operating; -40 °C to +85 °C Storage |
| Relative humidity | | 10% to 90% non-condensing |
| Regulatory | | FCC part 15 Class A, CE, RoHS, UKCA |
| MTBF | **C5310** | 530,000 hours @ 50 °C (Telcordia SR-332) (EST) |
| | **C5310-H** | 500,000 hours @ 50 °C (Telcordia SR-332) (EST) |

# C5310-M Camera Specifications

| Specifications | C5310-M (24.6 MP) (with a 50-pin I-PEX 20682-050E-02 connector) |
|---|---|
| Active image resolution | 5328 (H) x 4608 (V) |
| Pixel size | 2.74 µm |
| Optical format | 1.2 inch |
| Shutter | Global |
| Frame rate (max) | 21.7 fps (8-bit), 17.5 fps (10-bit), 7.5 fps (12-bit) |
| Digitization | 8-bit, 10-bit, 12-bit |
| Pixel Clock rate | 37.125 MHz |
| Dynamic range | 71 dB |
| Shutter speed | 30 µs to 16.0 s |
| Analog / Digital gain | 0–48 dB (0.1 dB step) |
| Digital gain | 1x (0 dB) to 4x (12 dB), 0.001x step |
| AEC/AGC | Yes |
| Black level offset | Manual (0–255), auto |
| Exposure control | Manual, auto, external, off |
| Binning | 1x2, 2x1 and 2x2 (available in monochrome cameras only) |
| Sub-sampling | 1x2, 2x1 and 2x2 |
| White balance | Once, manual, auto, off |
| Area of interest (AOI) | Two |
| Trigger Inputs | External, pulse generator, software, computer |
| Trigger options | Edge, overlap, pulse width, trigger filter, trigger delay, debounce |
| Trigger modes | Free-run, standard, fast |
| I/O control | 2 IN (OPTO, LVTTL) / 1 OUT (OPTO) |
| Strobe output | 1 strobe, programmable position and duration |
| Pulse generator | Yes, programmable |
| Lens mount | C-mount (default), P-Iris (optional) |
| Test image patterns | Yes |
| Upgradeable firmware | Yes |
| Data correction | 4 LUTs pre-programmed with Gamma 0.45, bad pixel correction (static, dynamic), flat field correction |
| Supply voltage range | 12 V DC (6 V–30 V), 1.5 A inrush @ 12 V |
| Power consumption | Typical: 2.64 W @ 12 V |
| Camera size (W x H x L) | 37 x 37 x 47.2 mm |
| Weight | 87 g |
| Vibration, shock | Complies with IEC60068-2-64 and IEC60068-2-27 |
| Environmental | -30 °C to +75 °C Operating;<br>-40 °C to +85 °C Storage |
| Relative humidity | 10% to 90% non-condensing |
| Regulatory | CE, RoHS, UKCA;<br>C5310-M camera is considered a board level assembly.<br>FCC Part 15 Class A testing in the final enclosure is the customer's responsibility. |
| MTBF | 530,000 hours @ 50 °C (Telcordia SR-332) (EST) |

# C5311 and C5311-H Cameras Specifications

| Specifications | | C5311 and C5311-H (16.2 MP) |
|---|---|---|
| Active image resolution | | 5328 (H) x 3040 (V) |
| Pixel size | | 2.74 µm |
| Optical format | | 1.1 inch |
| Shutter | | Global |
| Frame rate (max) | | 32.6 fps (8-bit), 26.2 fps (10-bit), 11.3 fps (12-bit) |
| Digitization | | 8-bit, 10-bit, 12-bit |
| Pixel Clock rate | | 37.125 MHz |
| Dynamic range | | 71 dB |
| Shutter speed | | 30 µs to 16.0 s |
| Analog / Digital gain | | 0–48 dB (0.1 dB step) |
| Digital gain | | 1x (0 dB) to 4x (12 dB), 0.001x step |
| AEC/AGC | | Yes |
| Black level offset | | Manual (0–255), auto |
| Exposure control | | Manual, auto, external, off |
| Binning | | 1x2, 2x1 and 2x2 (available in monochrome cameras only) |
| Sub-sampling | | 1x2, 2x1 and 2x2 |
| White balance | | Once, manual, auto, off |
| Area of interest (AOI) | | Two |
| Trigger Inputs | | External, pulse generator, software, computer |
| Trigger options | | Edge, overlap, pulse width, trigger filter, trigger delay, debounce |
| Trigger modes | | Free-run, standard, fast |
| I/O control | | 2 IN (OPTO, LVTTL) / 2 OUT (OPTO, TTL) |
| Strobe output | | 2 strobes, programmable position and duration |
| Pulse generator | | Yes, programmable |
| Lens mount | | C-mount (default), P-Iris (optional) |
| Camera housing | | 6000 series aluminum |
| Upgradeable firmware | | Yes |
| Data correction | | 4 LUTs pre-programmed with Gamma 0.45, bad pixel correction (static, dynamic), flat field correction |
| Heater control | **C5311-H** | Heater turns On below -30 °C; Heater turns Off above -20 °C<br>10 °C (fixed) hysteresis |
| Supply voltage range | **C5311** | 12 V DC (6 V–30 V), 1.5 A inrush @ 12 V |
| | **C5311-H** | 12 V DC (10 V–20 V), 1.5 A inrush @ 12 V |
| Power consumption | **C5311** | Typical: 2.76 W @ 12 V |
| | **C5311-H** | 6.36 W @ 12 V to 10.86 W @18 V (heater is On); 2.64 W @12 V (heater is Off)<br>Heater power dissipation varies with input supply voltage from 3.6 W @12 V to 8.1 W @18 V |
| Camera size (W x H x L) | | 37.0 mm x 37.0 mm x 47.2 mm |
| Weight | | 103.4 g |
| Vibration, shock | | Complies with IEC60068-2-64 and IEC60068-2-27 |
| Environmental | **C5311** | -30 °C to +75 °C Operating; -40 °C to +85 °C Storage |
| | **C5311-H** | -50 °C to +75 °C Operating; -40 °C to +85 °C Storage |
| Relative humidity | | 10% to 90% non-condensing |
| Regulatory | | FCC part 15 Class A, CE, RoHS, UKCA |
| MTBF | **C5311** | 530,000 hours @ 50 °C (Telcordia SR-332) (EST) |
| | **C5311-H** | 500,000 hours @ 50 °C (Telcordia SR-332) (EST) |

# C5311-M Camera Specifications

| Specifications | C5311-M (16.2 MP) (with a 50-pin I-PEX 20682-050E-02 connector) |
|---|---|
| Active image resolution | 5328 (H) x 3040 (V) |
| Pixel size | 2.74 µm |
| Optical format | 1.1 inch |
| Shutter | Global |
| Frame rate (max) | 32.6 fps (8-bit), 26.2 fps (10-bit), 11.3 fps (12-bit) |
| Digitization | 8-bit, 10-bit, 12-bit |
| Pixel Clock rate | 37.125 MHz |
| Dynamic range | 71 dB |
| Shutter speed | 30 µs to 16.0 s |
| Analog / Digital gain | 0–48 dB (0.1 dB step) |
| Digital gain | 1x (0 dB) to 4x (12 dB), 0.001x step |
| AEC/AGC | Yes |
| Black level offset | Manual (0–255), auto |
| Exposure control | Manual, auto, external, off |
| Binning | 1x2, 2x1 and 2x2 (available in monochrome cameras only) |
| Sub-sampling | 1x2, 2x1 and 2x2 |
| White balance | Once, manual, auto, off |
| Area of interest (AOI) | Two |
| Trigger Inputs | External, pulse generator, software, computer |
| Trigger options | Edge, overlap, pulse width, trigger filter, trigger delay, debounce |
| Trigger modes | Free-run, standard, fast |
| I/O control | 2 IN (OPTO, LVTTL) / 1 OUT (OPTO) |
| Strobe output | 1 strobe, programmable position and duration |
| Pulse generator | Yes, programmable |
| Lens mount | C-mount (default), P-Iris (optional) |
| Camera housing | 6000 series aluminum |
| Upgradeable firmware | Yes |
| Data correction | 4 LUTs pre-programmed with Gamma 0.45, bad pixel correction (static, dynamic), flat field correction |
| Supply voltage range | 12 V DC (6 V–30 V), 1.5 A inrush @ 12 V |
| Power consumption | Typical: 2.76 W @ 12 V |
| Camera size (W x H x L) | 37 x 37 x 47.2 mm |
| Weight | 87 g |
| Vibration, shock | Complies with IEC60068-2-64 and IEC60068-2-27 |
| Environmental | -30 °C to +75 °C Operating;<br>-40 °C to +85 °C Storage |
| Relative humidity | 10% to 90% non-condensing |
| Regulatory | CE, RoHS, UKCA;<br>C5311-M camera is considered a board level assembly.<br>FCC Part 15 Class A testing in the final enclosure is the customer's responsibility. |
| MTBF | 530,000 hours @ 50 °C (Telcordia SR-332) (EST) |

# C5420 Camera Specifications

| Specifications | C5420 (17 MP) |
|---|---|
| Active image resolution | 5472 (H) x 3084 (V) |
| Pixel size | 3.45 µm |
| Optical format | 4/3 inch |
| Shutter | Global |
| Frame rate (max) | 32 fps (8-bit), 26 fps (10-bit), 22 fps (12-bit) |
| Digitization | 8-bit, 10-bit, 12-bit |
| Pixel clock rate | 37.125 MHz |
| Dynamic range | 71 dB |
| Shutter speed | 30 µs to 16.0 s |
| Analog / Digital gain | 0–48 dB (0.1 dB step) |
| Digital gain | 1x (0 dB) to 4x (12 dB), 0.001x step |
| AEC/AGC | Yes |
| Black level offset | Manual (0–255), auto |
| Exposure control | Manual, auto, external, off |
| Binning | 1x2, 2x1 and 2x2 (available in monochrome cameras only) |
| Sub-sampling | 1x2, 2x1 and 2x2 |
| White balance | Once, manual, auto, off |
| Area of interest (AOI) | Two |
| Trigger Inputs | External, pulse generator, software, computer |
| Trigger options | Edge, overlap, pulse width, trigger filter, trigger delay, debounce |
| Trigger modes | Free-run, standard, fast |
| I/O control | 2 IN (OPTO, LVTTL) / 2 OUT (OPTO, TTL) |
| Strobe output | 2 strobes, programmable position and duration |
| Pulse generator | Yes, programmable |
| Lens mount | F-mount (default), M42, Canon EF EOS active or passive (optional) |
| Camera housing | 6000 series aluminum |
| Upgradeable firmware | Yes |
| Data correction | 4 LUTs pre-programmed with Gamma 0.45, bad pixel correction (static, dynamic), flat field correction |
| Supply voltage range | 12 V DC (6 V–30 V), 1.5 A inrush @ 12 V |
| Power consumption | Typical: 4.2 W @ 12 V |
| Camera size (W x H x L) | 60 x 60 x 57 mm |
| Weight | 340 g |
| Vibration, shock | 20G (20–200 Hz XYZ) / 100G |
| Environmental | -30 °C to +75 °C Operating;<br>-40 °C to +85 °C Storage |
| Relative humidity | 10% to 90% non-condensing |
| Regulatory | FCC part 15 Class A, CE, RoHS, UKCA |
| MTBF | 452,000 hours @ 50 °C (Telcordia SR-332) (EST) |

# C5420-T Camera Specifications

| Specifications | C5420-T (17 MP) |
|---|---|
| Active image resolution | 5472 (H) x 3084 (V) |
| Pixel size | 3.45 µm |
| Optical format | 4/3 inch |
| Shutter | Global |
| Frame rate (max) | 32 fps (8-bit), 26 fps (10-bit), 22 fps (12-bit) |
| Digitization | 8-bit, 10-bit, 12-bit |
| Pixel clock rate | 37.125 MHz |
| Dynamic range | 71 dB |
| Shutter speed | 30 µs to 16.0 s |
| Analog / Digital gain | 0 – 48 dB (0.1 dB step) |
| Digital gain | 1x (0 dB) to 4x (12 dB), 0.001x step |
| AEC/AGC | Yes |
| Black level offset | Manual (0–255), auto |
| Exposure control | Manual, auto, external, off |
| Binning | 1x2, 2x1 and 2x2 (available in monochrome cameras only) |
| Sub-sampling | 1x2, 2x1 and 2x2 |
| White balance | Once, manual, auto, off |
| Area of interest (AOI) | Two |
| Trigger Inputs | External, pulse generator, software, computer |
| Trigger options | Edge, overlap, pulse width, trigger filter, trigger delay, debounce |
| Trigger modes | Free-run, standard, fast |
| I/O control | 2 IN (OPTO, LVTTL) / 2 OUT (OPTO, TTL) |
| Strobe output | 2 strobes, programmable position and duration |
| Pulse generator | Yes, programmable |
| TEC | Up to 20 °C below camera heat-sink temperature |
| TEC control | On, off, auto |
| Forced air cooling control | Auto |
| Lens mount | F-mount (default), M42, Canon EF EOS active or passive (optional) |
| Camera housing | 6000 series aluminum |
| Upgradeable firmware | Yes |
| Data correction | 4 LUTs pre-programmed with Gamma 0.45, bad pixel correction (static, dynamic), flat field correction |
| Supply voltage range | 12 V DC (6 V–30 V), 1.5 A inrush @ 12 V |
| Power consumption | TEC off: 350 mA @ 12 V;  TEC on: 750 mA @ 12 V;  TEC auto: 920 mA @ 12 V |
| Camera size (W x H x L) | 60.0 x 64.4 x 70.5 mm |
| Weight | 453 g |
| Vibration, shock | 20G (20–200 Hz XYZ) / 100G |
| Environmental | -30 °C to +75 °C Operating;<br>-40 °C to +85 °C Storage |
| Relative humidity | 10% to 90% non-condensing |
| Regulatory | FCC part 15 Class A, CE, RoHS, UKCA |
| MTBF | 378,000 hours @ 50 °C (Telcordia SR-332) (EST) |

# C6420 Camera Specifications

| Specifications | C6420 (31 MP) |
|---|---|
| Active image resolution | 6480 (H) x 4860 (V) |
| Pixel size | 3.45 µm |
| Optical format | APS-C |
| Shutter | Global |
| Frame rate (max) | 17 fps (8-bit), 14 fps (10-bit), 6 fps (12-bit) |
| Digitization | 8-bit, 10-bit, 12-bit |
| Pixel clock rate | 37.125 MHz |
| Dynamic range | 71 dB |
| Shutter speed | 30 µs to 16.0 s |
| Analog / Digital gain | 0–48 dB (0.1 dB step) |
| Digital gain | 1x (0 dB) to 4x (12 dB), 0.001x step |
| AEC/AGC | Yes |
| Black level offset | Manual (0–255), auto |
| Exposure control | Manual, auto, external, off |
| Binning | 1x2, 2x1 and 2x2 (available in monochrome cameras only) |
| Sub-sampling | 1x2, 2x1 and 2x2 |
| White balance | Once, manual, auto, off |
| Area of interest (AOI) | Two |
| Trigger Inputs | External, pulse generator, software, computer |
| Trigger options | Edge, overlap, pulse width, trigger filter, trigger delay, debounce |
| Trigger modes | Free-run, standard, fast |
| I/O control | 2 IN (OPTO, LVTTL) / 2 OUT (OPTO, TTL) |
| Strobe output | 2 strobes, programmable position and duration |
| Pulse generator | Yes, programmable |
| Lens mount | F-mount (default), M42, Canon EF EOS active or passive (optional) |
| Camera housing | 6000 series aluminum |
| Upgradeable firmware | Yes |
| Data correction | 4 LUTs pre-programmed with Gamma 0.45, bad pixel correction (static, dynamic), flat field correction |
| Supply voltage range | 12 V DC (6 V–30 V), 1.5 A inrush @ 12 V |
| Power consumption | Typical: 4.2 W @ 12 V |
| Camera size (W x H x L) | 60 x 60 mm x 57 mm |
| Weight | 340 g |
| Vibration, shock | 20G (20–200 Hz XYZ) / 100G |
| Environmental | -30 °C to +75 °C Operating;<br>-40 °C to +85 °C Storage |
| Relative humidity | 10% to 90% non-condensing |
| Regulatory | FCC part 15 Class A, CE, RoHS, UKCA |
| MTBF | 452,000 hours @ 50 °C (Telcordia SR-332) (EST) |

# C6420-T Camera Specifications

| Specifications | C6420-T (31 MP) |
|---|---|
| Active image resolution | 6480 (H) x 4860 (V) |
| Pixel size | 3.45 µm |
| Optical format | APS-C |
| Shutter | Global |
| Frame rate (max) | 17 fps (8-bit), 14 fps (10-bit), 6 fps (12-bit) |
| Digitization | 8-bit, 10-bit, 12-bit |
| Pixel clock rate | 37.125 MHz |
| Dynamic range | 71 dB |
| Shutter speed | 30 µs to 16.0 s |
| Analog / Digital gain | 0 – 48 dB (0.1 dB step) |
| Digital gain | 1x (0 dB) to 4x (12 dB), 0.001x step |
| AEC/AGC | Yes |
| Black level offset | Manual (0–255), auto |
| Exposure control | Manual, auto, external, off |
| Binning | 1x2, 2x1 and 2x2 (available in monochrome cameras only) |
| Sub-sampling | 1x2, 2x1 and 2x2 |
| White balance | Once, manual, auto, off |
| Area of interest (AOI) | Two |
| Trigger Inputs | External, pulse generator, software, computer |
| Trigger options | Edge, overlap, pulse width, trigger filter, trigger delay, debounce |
| Trigger modes | Free-run, standard, fast |
| I/O control | 2 IN (OPTO, LVTTL) / 2 OUT (OPTO, TTL) |
| Strobe output | 2 strobes, programmable position and duration |
| Pulse generator | Yes, programmable |
| TEC | Up to 20 °C below camera heat-sink temperature |
| TEC control | On, off, auto |
| Forced air cooling control | Auto |
| Lens mount | F-mount (default), M42, Canon EF EOS active or passive (optional) |
| Camera housing | 6000 series aluminum |
| Upgradeable firmware | Yes |
| Data correction | 4 LUTs pre-programmed with Gamma 0.45, bad pixel correction (static, dynamic), flat field correction |
| Supply voltage range | 12 V DC (6 V–30 V), 1.5 A inrush @ 12 V |
| Power consumption | TEC off: 4.2 W @ 12 V;  TEC on: 9 W @ 12 V;  TEC auto: 11.04 W @ 12 V |
| Camera size (W x H x L) | 60.0 x 64.4 x 70.5 mm |
| Weight | 453 g |
| Vibration, shock | 20G (20–200 Hz XYZ) / 100G |
| Environmental | -30 °C to +75 °C Operating;<br>-40 °C to +85 °C Storage |
| Relative humidity | 10% to 90% non-condensing |
| Regulatory | FCC part 15 Class A, CE, RoHS, UKCA |
| MTBF | 378,000 hours @ 50 °C (Telcordia SR-332) (EST) |

# Ordering Information

When ordering a camera, please specify the camera ordering code. To create your own custom Cheetah ordering code, simply choose one element from each column below.

| Interface | Camera model | Sensor Type | Environmental | Lens Mount (see Note 1) | Filter/ customization options |
|---|---|---|---|---|---|
| CLF = Camera Link Full | C1621 (1528 x 1104)<br>C1921 (1944 x 1472)<br>C2020 (2064 x 1544)<br>C2420 (2464 x 2056)[4]<br>C2820 (2856 x 2848)[5]<br>C3220 (3216 x 2208)<br>C4020 (4112 x 2176)<br>C4120 (4112 x 3008)<br>C4510 (4512 x 4512)<br>C5310 (5328 x 4608)<br>C5311 (5328 x 3040) | C = Color<br>M = Monochrome<br>Z = Monochrome Polarized<br>Y = Color Polarized<br>(Y and Z types are only available for CLF-C2420)<br>Q = Ultraviolet with quartz glass cover<br>W = Ultraviolet without glass cover<br>(Q and W types are only available for CLF-C2820) | R = Ruggedized<br>M = featuring 50-pin IPEX connector<br>H = Heater option | C = C-Mount<br>S = CS-Mount<br>I = P-Iris C Mount<br>A = P-Iris CS Mount | 000 = none[3] |
| | C4420 (4432 x 4436)<br>C5420 (5472 x 3084)<br>C6420 (6480 x 4860) | C = Color<br>M = Monochrome | R = Ruggedized<br>T = Thermoelectric cooling | F = F-Mount<br>M = M42<br>L = Canon EF EOS Active Mount<br>E = Canon EF EOS Passive Mount | |

Notes:

1) **C-Mount, CS-Mount, P-Iris C-Mount, and P-Iris CS-Mount** are supported by the C1621, C1921, C2020, C2420, C2820, C3220, C4020, C4120, C4510, C5310, and C5311 cameras.

2) **F-Mount, M42, Canon EOS EF active or passive** are supported by the C4420, C5420, C6420, C4420-T, C5420-T, C6420-T cameras.

3) **000** (none) filter/customization option means: **0** – a color camera has IR filter, a monochrome camera does not have any filters; **00** – no customization.

4) C2420 camera is available with monochrome unpolarized (M), color unpolarized (C), monochrome polarized (Z), and color polarized (Y) sensor types.

5) C2820 camera is available only with ultraviolet sensor type with (Q) or without (W) quartz glass cover

6) Sample codes:
**CLF-C2020C-RC000:** Cheetah Color 3.1 MP camera with C-Mount and Camera Link interface.
**CLF-C2420Y-RS000:** Cheetah Color polarized 5MP camera with CS-Mount and Camera Link interface.
**CLF-C2820Q-RC000:** Cheetah 8.1 MP camera with ultraviolet sensor with quartz glass cover, C-Mount lens, and Camera Link interface.
**CLF-C6420M-RL000:** Cheetah Monochrome 31 MP camera with Canon EF EOS Active mount and Camera Link interface.
**CLF-C5420C-TF000:** Cheetah Color 17 MP camera with F-Mount, TEC (Thermoelectric cooling), and Camera Link interface.
**CLF-C1921C-MC000:** Cheetah Color 7.1 MP camera with C-Mount, 50-pin I-PEX connector, and Camera Link interface.
**CLF-C4120C-HC000**: Cheetah Color 12 MP camera with C-Mount, Heater option, and Camera Link interface.

# Accessories

Imperx recommends using the PS12V14A or PS12V18A power supply for powering Cheetah Camera Link cameras (except for the camera models with the 50-pin I-PEX connector). Imperx also offers cables for use with the cameras. The accessories are sold separately (see tables below).

| Part Number | Description | Compatible with: |
|---|---|---|
| PS12V14A | Power Supply<br>12 V DC, 3 A,<br>With one strobe and one trigger, 1.75 m length | Cheetah cameras with Camera Link® interface<br>(except for the camera models with the 50-pin I-PEX connector) |
| PS12V18A | Power Supply<br>12 V DC, 3 A,<br>With one strobe, one trigger, and P-Iris connector<br>1.75 m length | Cheetah cameras with Camera Link® interface and P-Iris lens control<br>(except for the camera models with the 50-pin I-PEX connector) |
| CBL-PWIO01 | Cable<br>Power and Input/Output, 12-pin (F)<br>Hirose to loose end, 2 m | Cheetah cameras with Camera Link® interface<br>(except for the camera models with the 50-pin I-PEX connector) |
| PCB-0538-0001 | Adapter Board (for testing) | Cheetah camera models with the 50-pin I-PEX connector |
| CBL-CUST-0007 | Cable (for use with the Adapter Board) | Cheetah camera models with the 50-pin I-PEX connector |

# Technical Support

Each camera is fully tested before shipping. If for some reason the camera is not operational after power up, check the following:

1. Check the power supply and all I/O cables. Make sure that all the connectors are firmly attached.

2. Check the status LED and verify that it is steady ON, if not—refer to the section Camera LED Status Indicators.

3. Enable the test mode and verify that the communication between the frame grabber and the camera is established. If the test pattern is not present, power off the camera, check all the cabling, frame grabber settings, and computer status.

If you still have problems with the camera operation, contact technical support at:

**Email:** support@imperx.com
**Toll Free** 1 (866) 849-1662 or (+1) 561-989-0006
**Fax:** (+1) 561-989-0045
**Visit our web site:** www.imperx.com

# Hardware

## C1621, C1921, C2020, C2420, C2420Y/Z, C2820, C3220, C4020, C4120, C4510, C5310, and C5311 Cameras Connectivity

The back panel of the camera provides all the connections needed to operate and control the camera. The back panel also provides an LED status indicator.

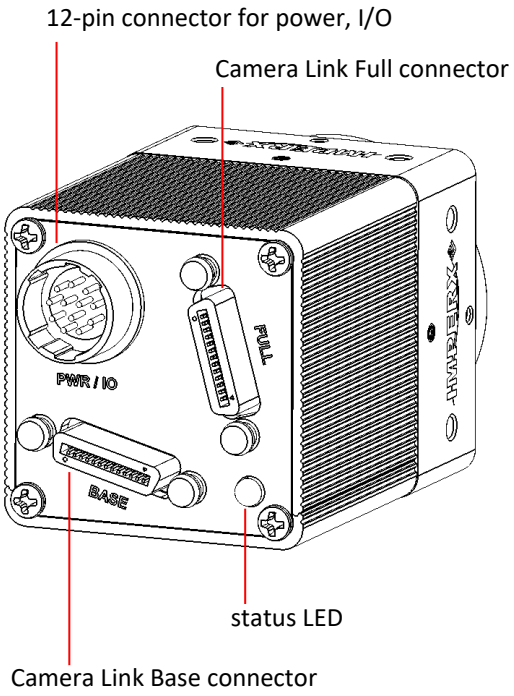


The camera provides the following connectors:

- two camera outputs. These are standard Mini-Camera Link connectors providing data, sync, control, and serial interface
- male 12-pin Hirose miniature locking receptacle #HR10A-10R-12PB (71) providing power and I/O interface
- status LED indicating the status of the camera (see Camera LED Status Indicators)
- the camera's model and serial number

# C1921-M, C2020-M, C2420-M, C2420Y/Z-M, C2820-M, C3220-M, C4020-M, C4120-M, C4510-M, C5310-M, and C5311-M Cameras Connectivity

The back board of the camera provides the I-PEX 20682-050E-02 connector to operate and control the camera.

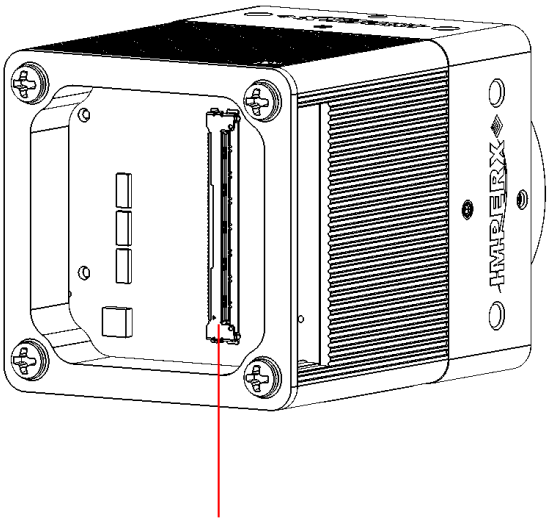

I-PEX 20682-050E-02 connector

The I-PEX 20682-050E-02 receptacle provides Camera Link interface, trigger and strobe signals, and power.
The mating plug is I-PEX 20679-050T-01.

# C4420, C5420, C6420 Cameras Connectivity

The back panel of the camera provides all the connectors needed to operate and control the camera. The back panel also provides an LED status indicator.

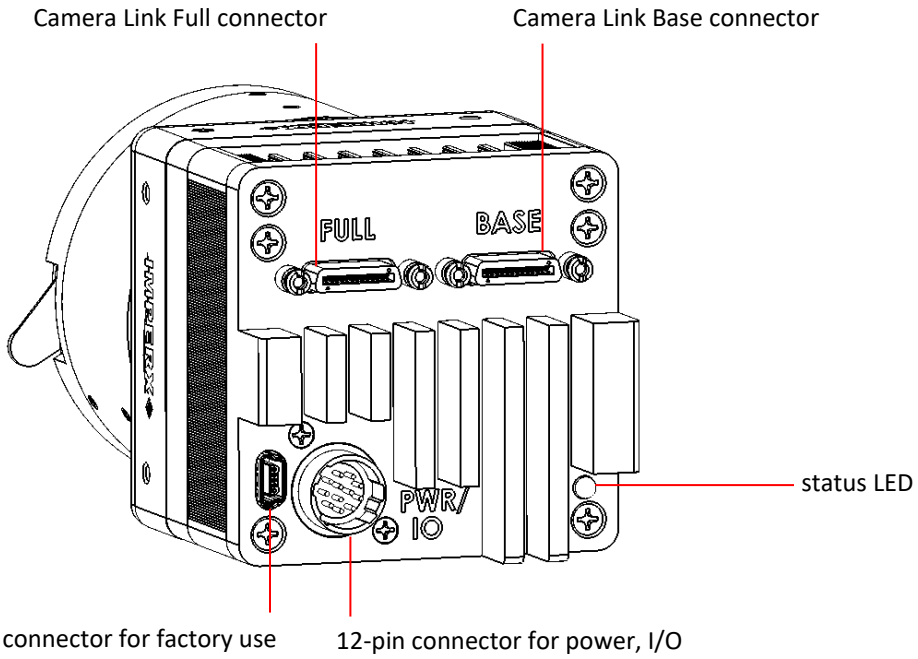


The camera provides the following connectors:

- two camera outputs. These are standard Mini-Camera Link connectors providing data, sync, control, and serial interface
- male 12-pin Hirose miniature locking receptacle #HR10A-10R-12PB (71) providing power and I/O interface
- USB type B programming/SPI connector
- status LED indicating the status of the camera (see Camera LED Status Indicators)
- the camera's model and serial number

# C4420-T, C5420-T, C6420-T Cameras Connectivity

The back panel of the camera provides all the connectors needed to operate and control the camera. The back panel also provides an LED status indicator.

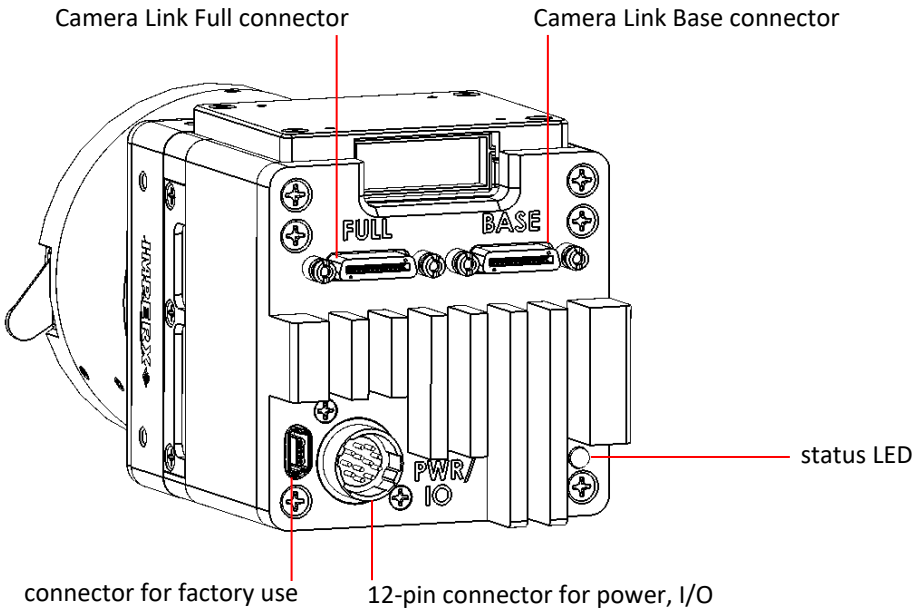


The camera provides the following connectors:

- two camera outputs. These are standard Mini-Camera Link connectors providing data, sync, control, and serial interface
- male 12-pin Hirose miniature locking receptacle #HR10A-10R-12PB (71) providing power and I/O interface
- USB type B programming/SPI connector
- status LED indicating the status of the camera (see Camera LED Status Indicators)
- the camera's model and serial number

# Hirose Connector Pin Assignments

The Hirose connector on the camera's back panel is a male type miniature locking receptacle #HR10A-10R-12PB(71). The Imperx PS12V14A power supply (sold separately – see section Power Supply) terminates in a female HIROSE type miniature locking plug #HR10A-10P-12S(73) and has two small BNC pig-tail cables for the external trigger input (black) and strobe output (white).

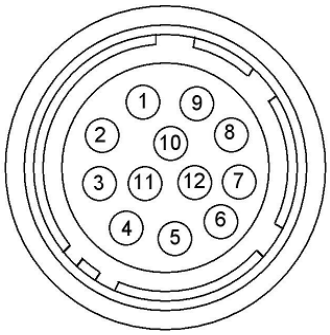


| Pin | Signal Name | Use |
|---|---|---|
| 1 | 12 VDC RTN | 12 VDC Main Power Return |
| 2 | +12 VDC | 12 VDC Main Power |
| 3 | Reserved | Reserved |
| 4 | Reserved | Reserved |
| 5 | OUT2 RTN | General Purpose Output 2, Contact 1 (Opto-isolated) |
| 6 | OUT1 RTN | General Purpose Output 1 Return (TTL) |
| 7 | OUT1 | General Purpose Output 1 (TTL) |
| 8 | INPUT1 | General Purpose Input 1 (Opto-isolated) |
| 9 | INPUT2 | General Purpose Input 2 (TTL/LVTTL) |
| 10 | INPUT1 RTN | General Purpose Input 1 Return (Opto-isolated) |
| 11 | INPUT2 RTN | General Purpose Input 2 Return (TTL) |
| 12 | OUT2 | General Purpose Output 2, Contact 2 (Opto-isolated) |

# I-PEX Connector Pin Assignments

The I-PEX 20682-050E-02 receptacle provides Camera Link interface, trigger and strobe signals, and power for the C1921-M, C2020-M, C2420-M, C2420Y/Z-M, C3220-M, C4020-M, C4120-M, C4510-M, C5310-M, and C5311-M cameras. The mating plug is I-PEX 20679-050T-01.

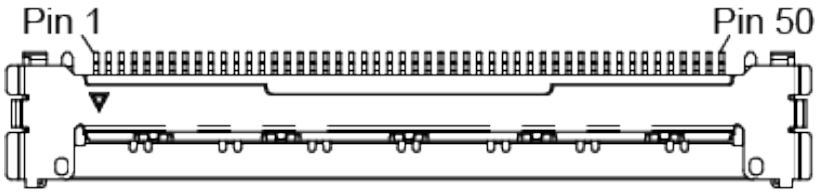


| Pin | Signal Name | Description |
|---|---|---|
| 1 | VCC | Power input to the camera<br>A user must provide ESD and EMI filtering if required |
| 2 | VCC | |
| 3 | VCC | |
| 4 | VCC | |
| 5 | GND | Camera Circuit Ground |
| 6 | GND | |
| 7 | GND | |
| 8 | GND | |
| 9 | X0_p | Camera Link Port X interface 100 Ohm differential signaling |
| 10 | X0_n | |
| 11 | X1_p | |
| 12 | X1_n | |
| 13 | X2_p | |
| 14 | X2_n | |
| 15 | X3_p | |
| 16 | X3_n | |
| 17 | XCLK_p | |
| 18 | XCLK_n | |
| 19 | Y0_p | Camera Link Port Y interface 100 ohm differential signaling |
| 20 | Y0_n | |
| 21 | Y1_p | |
| 22 | Y1_n | |
| 23 | Y2_p | |
| 24 | Y2_n | |

| Pin | Signal Name | Description |
|---|---|---|
| 25 | Y3_p | |
| 26 | Y3_n | |
| 27 | YCLK_p | |
| 28 | YCLK_n | |
| 29 | Ser_TFG_p | Serial To Frame Grabber |
| 30 | Ser_TFG_n | |
| 31 | Ser_TC_p | Serial To Camera |
| 32 | Ser_TC_n | |
| 33 | CC1_p | Camera Control 1 input |
| 34 | CC1_n | |
| 35 | Z0_p | Camera Link Port Z interface 100 ohm differential signaling |
| 36 | Z0_n | |
| 37 | Z1_p | |
| 38 | Z1_n | |
| 39 | Z2_p | |
| 40 | Z2_n | |
| 41 | Z3_p | |
| 42 | Z3_n | |
| 43 | ZCLK_p | |
| 44 | ZCLK_n | |
| 45 | IN1 TRG (OPTO) | Camera External Trigger signal, 3.3 to 24V logic input optically coupled |
| 46 | IN1 RTN | Camera External Trigger return |
| 47 | OUT 2 (OPTO) | Optically coupled output logic 3.3 V to 5.0 V |
| 48 | OUT 2 RTN | OUT2 return |
| 49 | IN2 (TTL) | TTL input signal 3.3 V to 5.0 V |
| 50 | GND | Camera Circuit Ground |

# Connecting a P-Iris Lens to Cameras with Hirose Connector

**⚠CAUTION**

Cameras with P-Iris lens control do not support INPUT2 (TTL/LVTTL) and OUT2 (OPTO). In this camera's configuration, pins 5, 9, 11, and 12 are assigned to solely control a P-Iris lens and use low-voltage signals. Do not connect any equipment other than a P-Iris lens to these contacts. Doing so can damage the camera!

If your application requires INPUT2 or OUT2, the camera needs to be re-configured. Please contact Imperx customer support support@imperx.com.

The Cheetah C1621, C1921, C2020, C2420, C2820, C3220, C4020, C4120, C4510, C5310, and C5311 cameras are available with optional P-Iris lens mount. Signals from the camera's Hirose connector provide power and control the P-Iris through an external cable.

Imperx recommends using the PS12V18A power supply that has a lens control cable terminated with a female P-Iris plug. The cable drawing is shown on the page 58.

If your application requires assembling you own cable, please refer to the diagram below that shows the P-Iris connections to the Hirose connector:

Hirose HR10A-10P-12S(73) female plug

| Signal | Pin |
|---|---|
| P-Iris Phase A+ | 5 |
| P-Iris Phase B- | 9 |
| P-Iris Phase B+ | 11 |
| P-Iris Phase A- | 12 |

P-Iris jack (female)

| Pin | Signal |
|---|---|
| 2 | Phase A+ |
| 4 | Phase B- |
| 1 | Phase B+ |
| 3 | Phase A- |

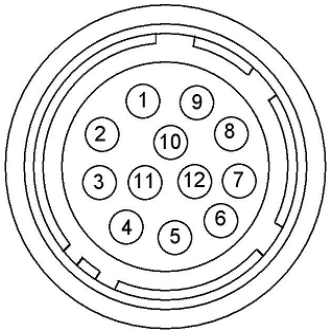


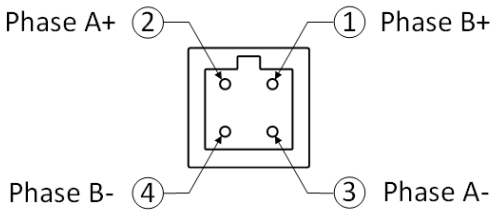

| Pin | Signal Name | Use |
|---|---|---|
| 1 | +12 V DC RTN | 12 VDC Main Power Return |
| 2 | +12 V DC | 12 VDC Main Power |
| 3 | Reserved | Reserved |
| 4 | Reserved | Reserved |
| 5 | P-Iris Phase A+ | Mapped to the pin 2 of a P-Iris jack |
| 6 | OUT1 RTN | General Purpose Output 1 Return (TTL) |
| 7 | OUT1 | General Purpose Output 1 (TTL) |
| 8 | INPUT1 | General Purpose Input 1 (Opto-isolated) |
| 9 | P-Iris Phase B- | Mapped to the pin 4 of a P-Iris jack |
| 10 | INPUT1 RTN | General Purpose Input 1 Return (Opto-isolated) |
| 11 | P-Iris Phase B+ | Mapped to the pin 1 of a P-Iris jack |
| 12 | P-Iris Phase A- | Mapped to the pin 3 of a P-Iris jack |

# Connecting a P-Iris Lens to Cameras with I-PEX Connector

The Cheetah C1921-M, C2020-M, C2420-M, C2420Y/Z-M, C3220-M, C4020-M, C4120-M, C4510-M, C5310-M, and C5311-M cameras are available with optional P-Iris lens mount. Signals from the camera's I-PEX connector provide power and control the P-Iris through an external cable.

Please refer to the diagram below that shows the P-Iris connections to the I-PEX connector.

I-PEX 20682-050E-02 receptacle

| Signal | Pin |
|---|---|
| P-Iris Phase A- | 47 |
| P-Iris Phase A+ | 48 |
| P-Iris Phase B- | 49 |
| P-Iris Phase B+ | 50 |

P-Iris jack (female)

| Pin | Signal |
|---|---|
| 3 | Phase A- |
| 2 | Phase A+ |
| 4 | Phase B- |
| 1 | Phase B+ |

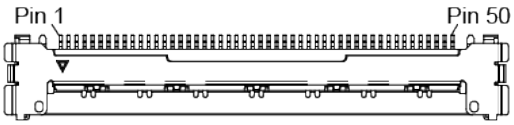


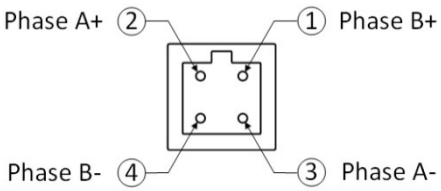

# Camera LED Status Indicators

The camera has a red-green-yellow LED on the back panel of the camera. The following LED colors and light patterns indicate the camera status and mode of operation:

| LED Condition | | Status Indication |
|---|---|---|
| | Green steady ON | Normal operation. You should see a normal image coming out of the camera. |
| | Green blinks at ~ 2.0 Hz | Programmable Frame Time enabled. |
| | Amber steady ON | Test mode. You should see one of the test patterns. |
| | Amber blinks at ~ 0.5 Hz | Camera is in AGC/AEC mode or trigger mode. In this AGC/AEC mode, changing the shutter slider does not affect image luminance. |
| | Red steady ON | RS-232 communication error or firmware load error. Re-power the camera and load the factory settings. If the condition is still present, contact the factory for support. |
| | LED OFF | Power not present. Possible power supply failure or faulty external AC adapter. Re-power camera and load factory settings. If the LED is still OFF, contact the factory for RMA. |

# Power Supply and Cables

The camera can be powered using an external Power Supply providing +12 V DC ± 10% and up to 2.5 A DC current or a frame grabber using Power over Camera Link through the Camera Link cable.

Imperx offers the PS12V14A Power Supply for use with all Cheetah Camera Link cameras (refer to the PS12V14A Power Supply section) and PS12V18A Power Supply for use with Cheetah Camera Link cameras having P-Iris lens (refer to the PS12V18A Power Supply section).
The PS12V14A and PS12V18A Power Supplies can be purchased separately.

Imperx also offers a cable assembly (P/N: CBL-PWIO01, power and input/output, 12-pin Hirose to unterminated cable, 2 meters long, see I/O Cable PWIO01) for use with cameras powered over Camera Link interface or using an external power supply. The cable also provides easy access to all trigger inputs and/or strobe outputs.

**NOTE** ⊛ The PS12V14A and PS12V18A power supplies and CBL-PWIO01 cable are not compatible with the Cheetah C1921-M, C2020-M, C2420-M, C2420Y/Z-M, C2820-M, C3220-M, C4020-M, C4120-M, C4510-M, C5310-M, and C5311-M cameras.

The C1921-H, C2020-H, C2420-H, C2420Y/Z-H, C2820-H, C3220-H, C4020-H, C4120-H, C4510-H, C5310-H, and C5311-H cameras requires a single variable power source to both power the camera and the heater. Adjusting the input voltage sets the desired heater power dissipation. The typical supply voltage range should be from 12 V to 18 V.

# PS12V14A Power Supply

The PS12V14A power supply provides +12 V DC ± 5% and up to 3 A DC current. The operating input voltage ranges from 100 to 240 V AC.

The PS12V14A power supply is comprised of three components:

| Item | Qty. |
|---|---|
| PS12V10 Universal Power Supply | 1 |
| CBL-PWR-0014 I/O and Power Cable | 1 |
| Power Cord | 1 |

The CBL-PWR-0014 cable terminates in a female Hirose type miniature locking plug #HR10A-10P-12S(73). It has two BNC pig-tail cables providing external trigger input (black) and strobe output (white).

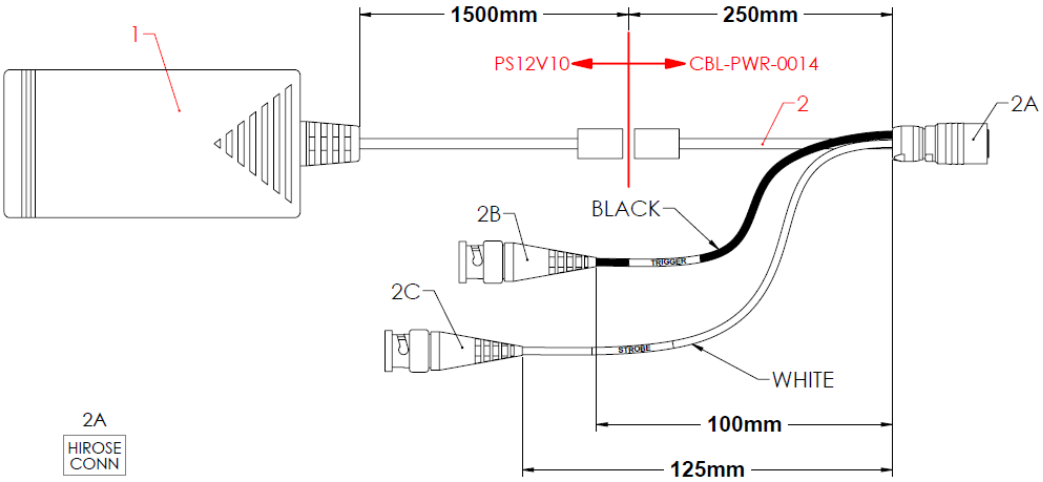


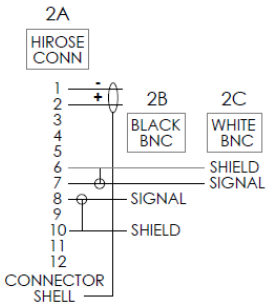


| ITEM | QTY | DESCRIPTION |
|---|---|---|
| 1 | 1 | UNIVERSAL POWER SUPPLY PS12V10 |
| 2 | 1 | POWER CABLE CBL-PWR-0014 |

| ITEM | QTY | DESCRIPTION |
|---|---|---|
| 2A | 1 | CONNECTOR, HIROSE HR10A-10P-12S |
| 2B | 1 | BNC(M) CABLE SUBASSEMBLY (BLACK) |
| 2C | 1 | BNC(M) CABLE SUBASSEMBLY (WHITE) |

# PS12V18A Power Supply

The PS12V18A power supply provides +12 V DC ± 5% and up to 3 A DC current to the Cheetah CLF camera with a P-Iris lens. The operating input voltage ranges from 100 to 240 V AC.

The PS12V18A power supply is comprised of three components:

| Item | Qty. |
|---|---|
| PS12V10 Universal Power Supply | 1 |
| CBL-PWR-0018 I/O and Power Cable | 1 |
| Power Cord | 1 |

The CBL-PWR-0018 cable terminates in a female Hirose type miniature locking plug #HR10A-10P-12S(73). It has two BNC pig-tail cables providing external trigger input (black) and strobe output (white). It also features a lens control cable terminated with a female P-Iris plug.

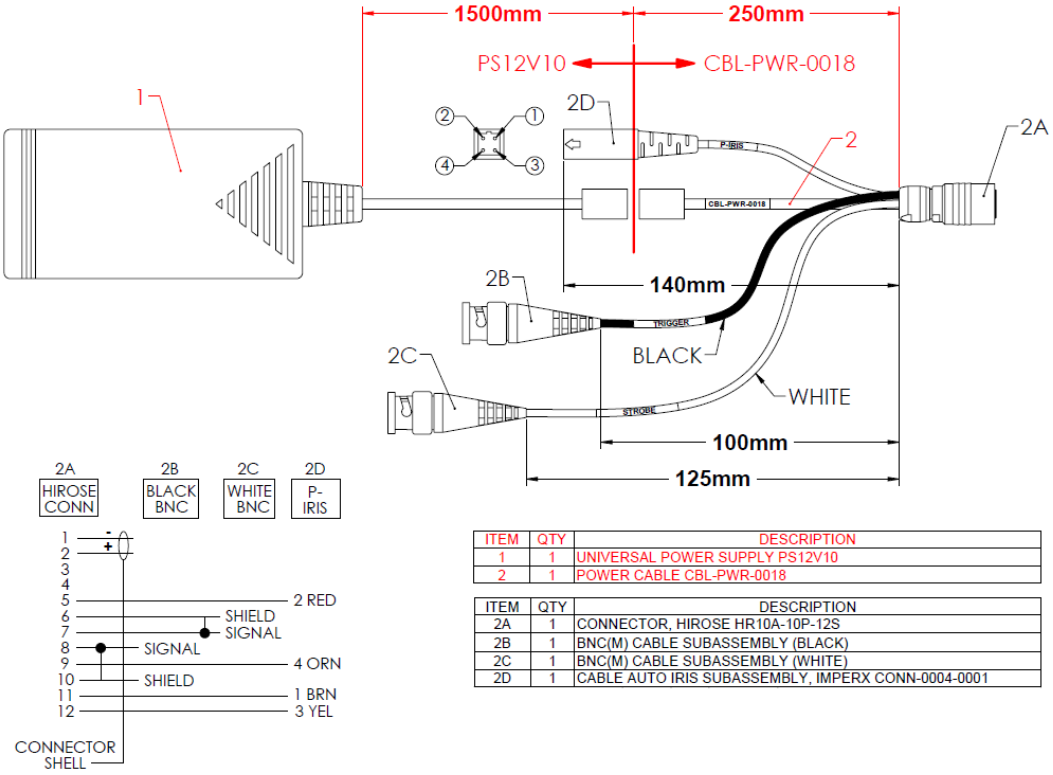


| ITEM | QTY | DESCRIPTION |
|---|---|---|
| 1 | 1 | UNIVERSAL POWER SUPPLY PS12V10 |
| 2 | 1 | POWER CABLE CBL-PWR-0018 |

| ITEM | QTY | DESCRIPTION |
|---|---|---|
| 2A | 1 | CONNECTOR, HIROSE HR10A-10P-12S |
| 2B | 1 | BNC(M) CABLE SUBASSEMBLY (BLACK) |
| 2C | 1 | BNC(M) CABLE SUBASSEMBLY (WHITE) |
| 2D | 1 | CABLE AUTO IRIS SUBASSEMBLY, IMPERX CONN-0004-0001 |

# PS12V14A and PS12V18A Specifications

| Specifications | | Description |
|---|---|---|
| **Input** | | |
| Voltage | | 100–240 V AC |
| Frequency | | 50–60 Hz |
| Current | | 1 A max |
| Inrush Current | | 70 A max / 230 V AC (cold start @ 25 °C, full load) |
| Efficiency | | Eff (av) ≥ 87.4 % (at 115 V AC & 230 V AC)<br>Eff ≥ 78.303 % (at 230V/50Hz input @10% load for CoC Tier2) |
| | | |
| **Output** | | |
| Voltage | | 11.4 V to 12.6 V DC, 12 V DC nominal |
| Current | | 3 A max |
| Load Regulation | | ± 5% |
| Ripple & Noise | | 1% Vpp max for Output Voltage @ full load |
| Total Power | | 36.0 W Max |
| **Protection** | | |
| Over-Voltage Protective (OVP) | | V out * 180% (max) |
| Short-Circuit Protective (SCP) | | Automatic recovery after short circuit fault being removed |
| Over Current Protection (OCP) | | I out * 200% (max) |
| | | |
| **Safety, EMI and EMC Requirement** | | |
| Safety | | UL, CUL, GS, PSE, BSMI, CB, RCM, CCC, KC, LPS |
| Dielectric Strength | | 10 mA max. cut off current |
| | | (1) Primary to Secondary: 3000 V AC for 1 minute |
| | | (2) Primary to Frame Ground: 1500 V AC for 1 minute |
| Insulation Resistance | | (1) Primary to Secondary: 10 MOhm for 500 V DC |
| | | (2) Primary to Frame Ground: 10 MOhm for 500 V DC |
| EMI Requirement | | CE, FCC Class B, Conduction and Radiation meet |
| Leakage Current | | Less than 3.5 mA |
| Grounding Test | | Resistance 0.1 Ohm max @ 32 A |
| | | |
| Environmental | Operating<br>Storage | 0 °C to +40 °C<br>-20 °C to +80 °C |
| Relative humidity | Operating<br>Storage | 20% to 80% non-condensing<br>10% to 90% non-condensing |
| Regulatory | | DoE VI, ErP (Lot 7), GEMS, NRCan, CEC, RoHS |
| | | |
| **Cable Length** | | |
| Supplied AC power input cable (IEC) | | 1.8 m (6’) |
| Power supply output (+12 V) | | 1.75 m (5’) ± 15 cm (6”), connector HIROSE #HR10A-10P-12S |
| Strobe | | 12.5 cm (5”) ± 1 cm (0.4”) connector BNC male |
| Trigger | | 10 cm (4”) ± 1 cm (0.4”) connector BNC male |
| P-Iris (for CBL-PWR-0018) | | 14.4 cm (5.7”) ± 1 cm (0.4”) |

## Connecting the PS12V14A / PS12V18A Power Supply

1. Connect a power cord to the PS12V10 power adapter.

2. Connect the KPPX-4P plug of the PS12V10 power adapter to the KPJX-CM-4S socket of the CBL-PWR-0014 / CBL-PWR-0018 cable .

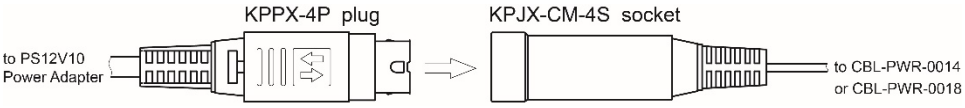


**⚠CAUTION**

Push connectors together until the locking mechanism clicks, and there is no gap between the connectors. If connectors are not securely locked, overheating may occur resulting in damage to the cable or leading to fire.

**Correct position**

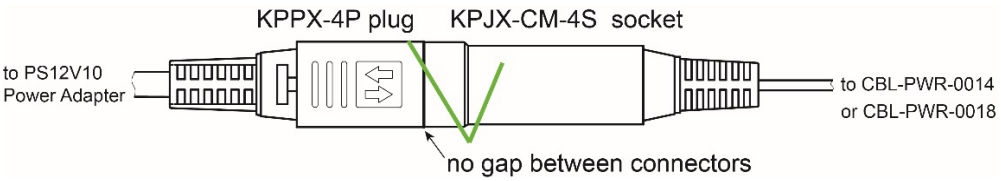


**Incorrect position**

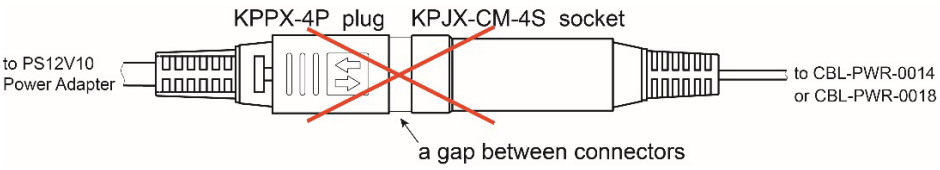


3. Connect the Hirose connector of the CBL-PWR-0014 / CBL-PWR-0018 cable to the Cheetah CLF camera.

4. Connect the Trigger and Strobe cables if applicable.

5. Connect the P-Iris jack to a P-Iris lens (PS12V18A power supply only).

**⚠CAUTION**

To disconnect the CBL-PWR-0014 or CBL-PWR-0018 cable from the PS12V10 power adapter, pull on the plug KPPX-4P. Do not pull on the cable. Doing so may result in damage to the cable.

## PS12V14A Connection Diagram

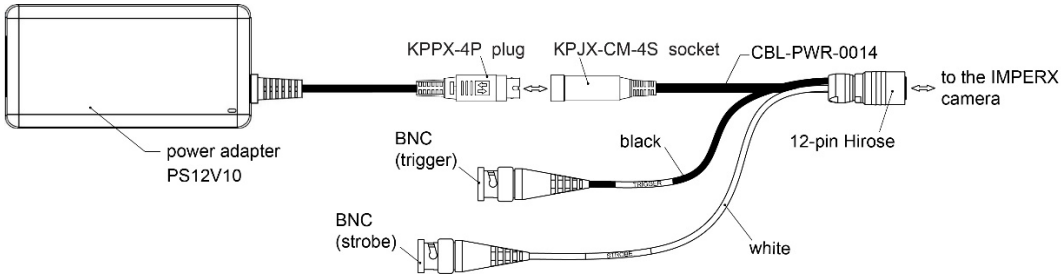


## PS12V18A Connection Diagram

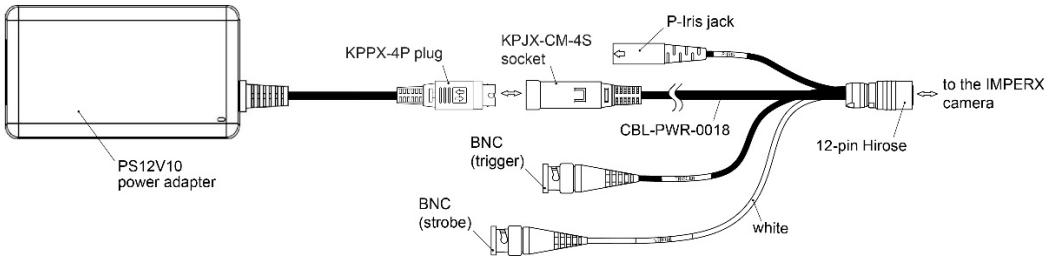

# I/O Cable CBL-PWIO01

The optionally purchased CBL-PWIO01 cable is used with Cheetah Camera Link cameras for accessing the camera's trigger and strobe signals when the cameras are powered using a frame grabber. The camera can also be powered with this cable using an external power supply. The cable terminates in a female Hirose plug #HR10A-10P-12S(73) on one end and 12 loose wires on the opposing end.

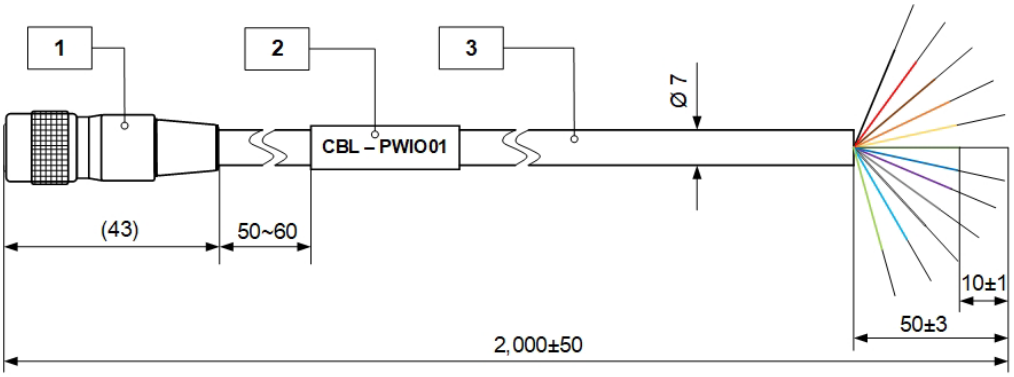


Hirose
HR10A-10P-12S(73)
Rear veiw

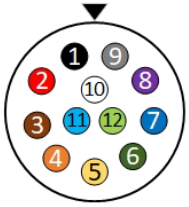


| Pin | Wire color | Signal | |
|---|---|---|---|
| 1 | Black | 12 V DC RTN | } alternative power (connect if applicable) |
| 2 | Red | +12 V DC | |
| 3 | Brown | Reserved | |
| 4 | Orange | Reserved | |
| 5 | Yellow | OUT2 RTN (OPTO) | |
| 6 | Green | OUT1 RTN (TTL) | |
| 7 | Blue | OUT1 (TTL) | |
| 8 | Violet | IN1 (OPTO) | |
| 9 | Gray | IN2 (TTL/LVTTL) | |
| 10 | White | IN1 RTN (OPTO) | |
| 11 | Sky Blue | IN2 RTN (TTL) | |
| 12 | Yellowish Green | OUT2 (OPTO) | |

| Unit | Item | QTY | Description |
|---|---|---|---|
| mm | 1 | 1 | Hirose HR10A-10P-12S(73) |
| | 2 | 1 | Shrinking label Ø 8 mm x 30 mm |
| | 3 | 1 | Cable Ø 7 mm, 2 meters |

# Active Canon EF Mount

The Canon EF lens mount provides active lens control on C4420, C5420, C6420, C4420-T, C5420-T, and C6420-T cameras.

The cameras provide communication and power to the mount through an internal connector on the front of the camera. The connector eliminates the need for a special power supply and external cable between the camera and the Canon EF mount.

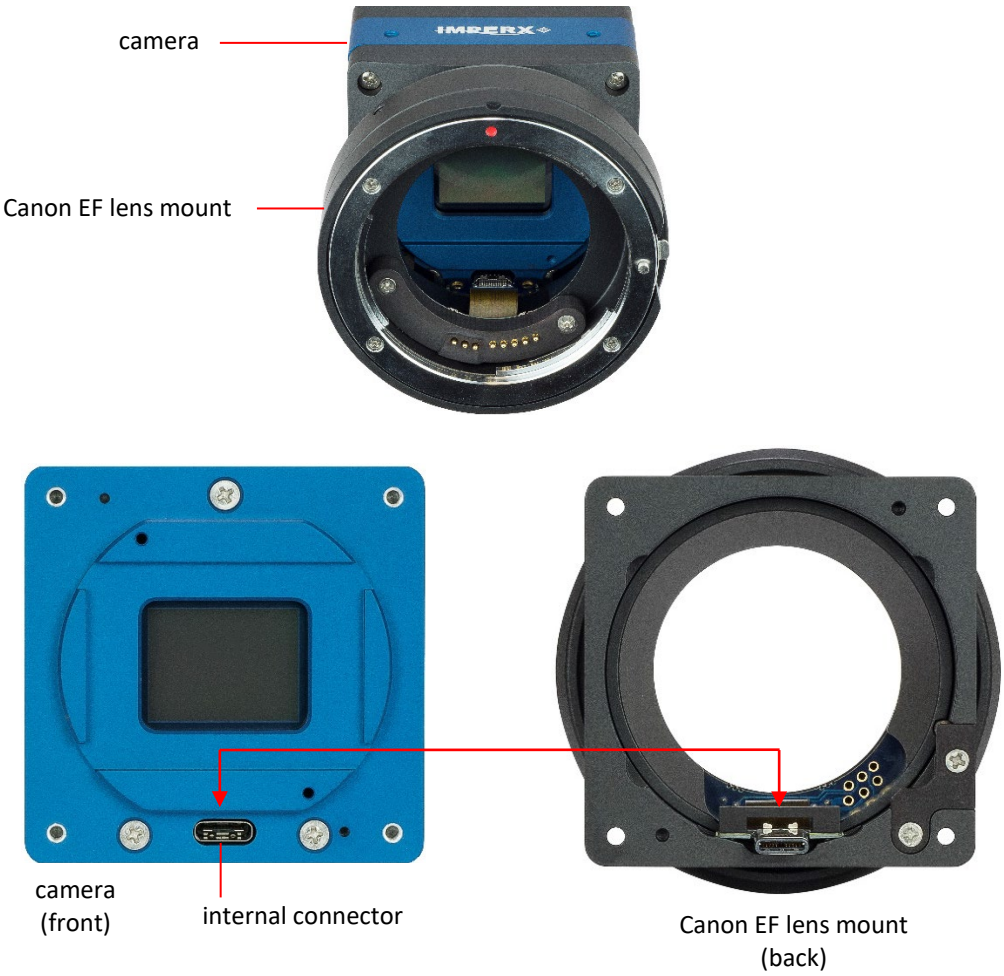

# Electrical Connectivity

The Cheetah camera has two external inputs, IN 1 and IN 2. Input IN1 is optically isolated while input IN2 accepts low voltage TTL (LVTTL). The camera provides two general-purpose outputs. Output OUT1 is a 5 V TTL compatible signal and output OUT2 is opto-isolated. The following figures show the external input electrical connections and the external output electrical connections:

## Opto-Isolated Input IN1

Input signals IN1 and IN1 RTN are optically isolated, and the voltage difference between the two must be positive between 3.3 and 24 volts. The minimum input current is 3.3 mA.

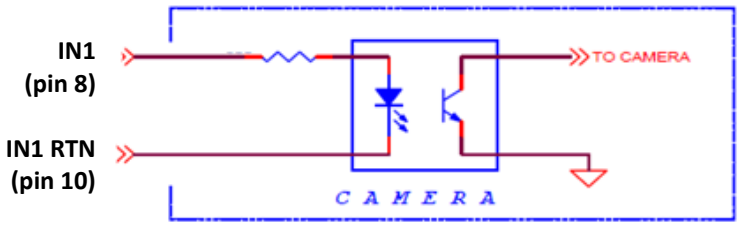


## TTl/LVTTL Input IN2

Input signals IN2 and IN2 RTN provide interfaces to a TTL or LVTTL input signal. The signal level (voltage difference between the inputs IN2 and IN2 RTN) must be LVTTL (3.3 V) or TTL (5.0 V). The total maximum input current must not exceed 2.0 mA.

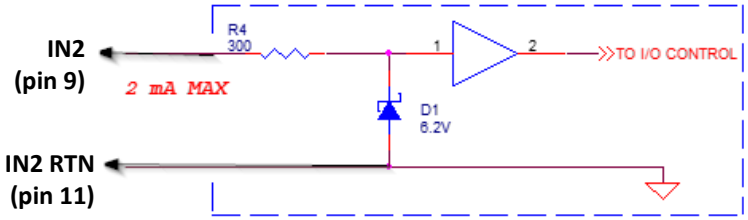


## TTL Output OUT1

Output OUT1 is a 5 V TTL compatible signal and the maximum output current must not exceed 8 mA.

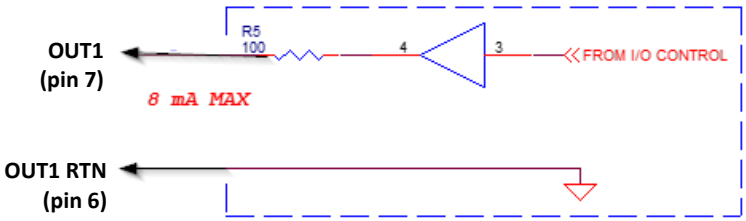

## Opto-Isolated Output OUT2

Output OUT2 is an optically isolated switch. There is no pull-up voltage on either contact. An external pull-up voltage (up to 25 V) is required for operation. Output is not polarity sensitive and AC or DC loads are possible. The voltage across OUT2 Contact 1 and OUT2 Contact 2 must not exceed 25 V and the current through the switch must not exceed 50 mA. The switch "On" resistance is less than 5 Ohms. Optional OUT2 circuit configurations are detailed below.

**Open drain logic driver:**

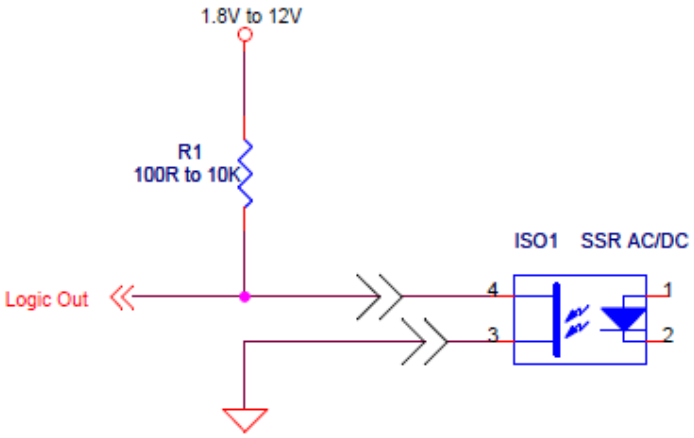


**Low side load driver:**

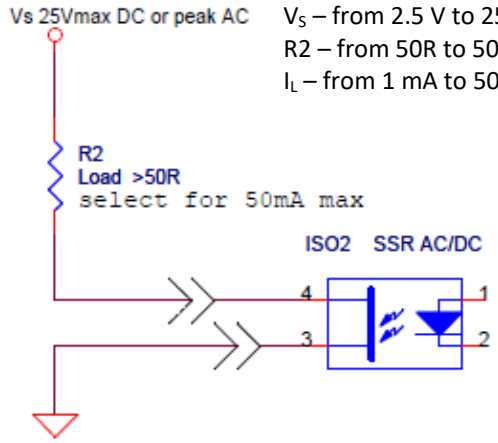


$V_S$ – from 2.5 V to 25 V (DC or peak AC)
R2 – from 50R to 500R
$I_L$ – from 1 mA to 50 mA

**High side load driver**

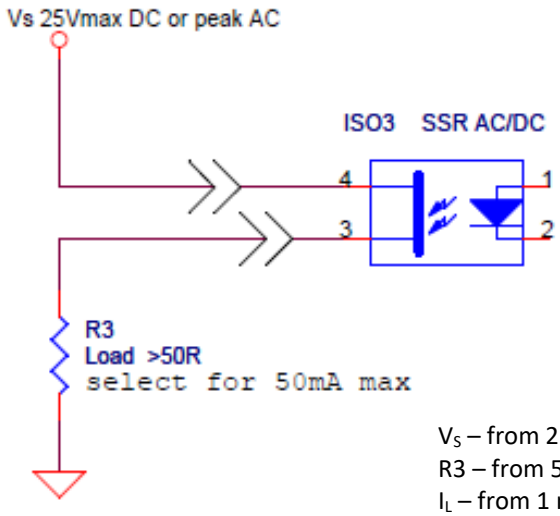


$V_S$ – from 2.5 V to 25 V (DC or peak AC)
R3 – from 50R to 500R
$I_L$ – from 1 mA to 50 mA

# Mechanical Drawings

| Camera model | Camera size (W x H x L) | Mounting holes | | |
|---|---|---|---|---|
| | | Size | Qty. | Location |
| CLF-C1621, CLF-C1921, CLF-C2020, CLF-C2420, CLF-C2420Y/Z, CLF-C2820, CLF-C3220, CLF-C4020, CLF-C4120, C4510, C5310, C5311 | 37 x 37 x 47.2 mm | M3 X 0.5mm 4.5 mm deep | 8 | 2 holes on each side |
| CLF-C4420, CLF-C5420, CLF-C6420 | 60 x 60 x 57 mm | M3 X 0.5mm 5.0 mm deep | 8 | 2 holes on each side |
| CLF-C4420-T, CLF-C5420-T, CLF-C6420-T | 60.0 x 64.4 x 70.5 mm | M3 X 0.5mm 5.0 mm deep | 8 | 2 holes on each side |

## C1621, C1921, C2020, C2420, C2420Y/Z, C2820, C3220, C4020, C4120, C4510, C5310, C5311 Cameras

The camera housing is made of precision-machined aluminum. For maximum flexibility, the camera has eight M3X0.5mm mounting holes located towards the front of the camera on all four sides. An additional plate with ¼-20 UNC (tripod mount) and hardware ship with each camera.

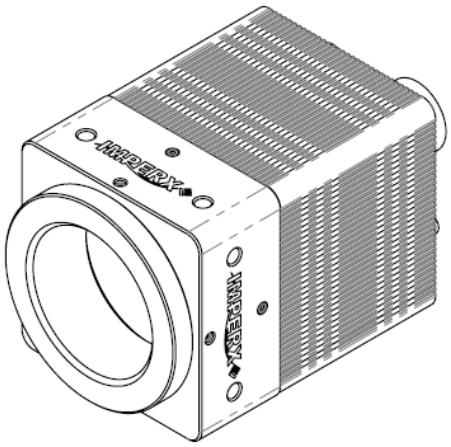

**Front View:**

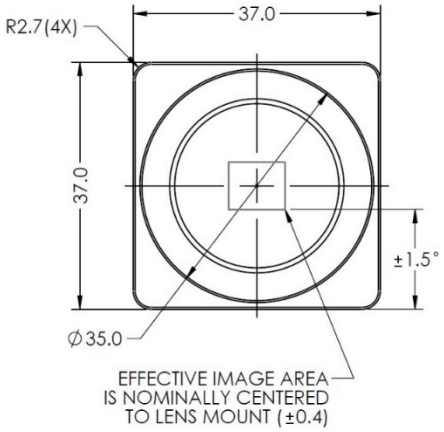


**Back View:**

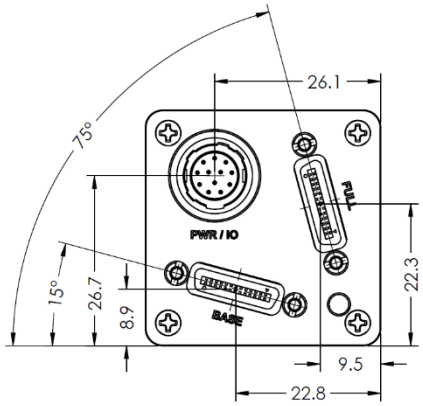

**Top View:**

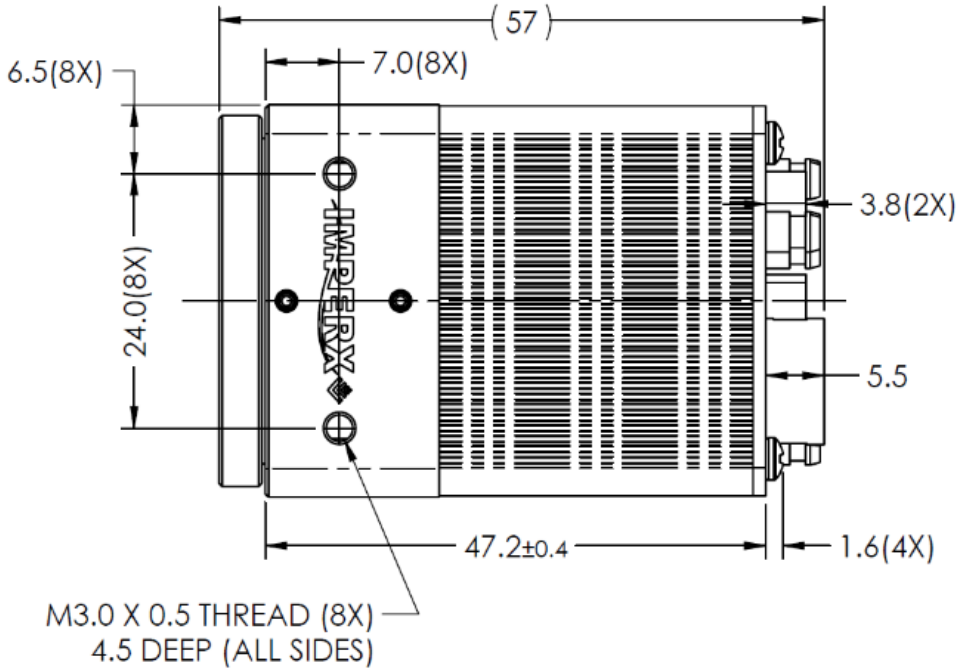


**Side View with Image Plane:**

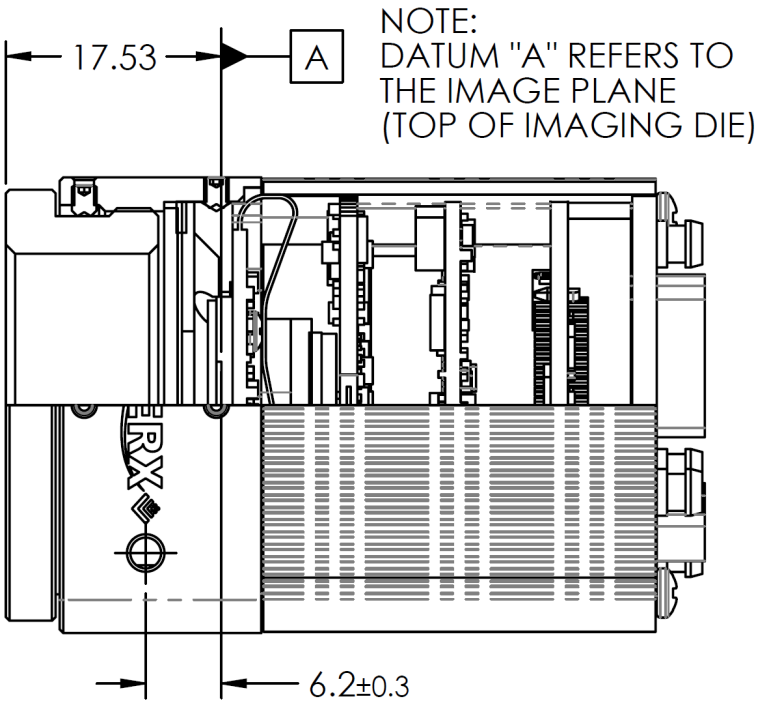

# C1921-M, C2020-M, C2420-M, C2420Y/Z-M, C3220-M, C4020-M, C4120-M, C4510-M, C5310-M, C5311-M Cameras

The camera housing is made of precision-machined aluminum. For maximum flexibility, the camera has eight M3X0.5mm mounting holes located towards the front of the camera on all four sides. An additional plate with ¼-20 UNC (tripod mount) and hardware ship with each camera.

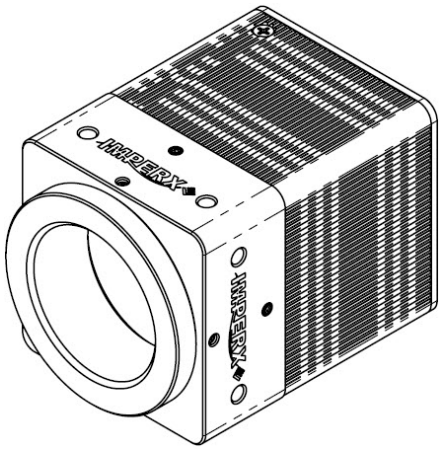


**Front View:**

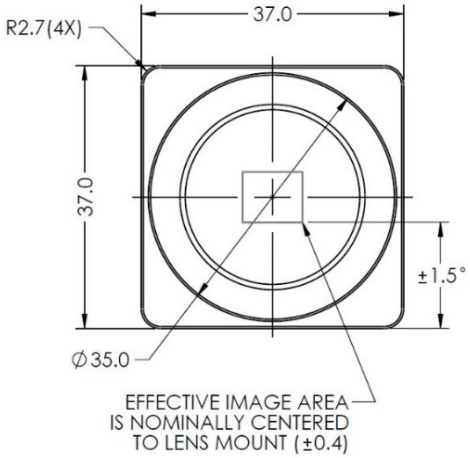


**Back View:**

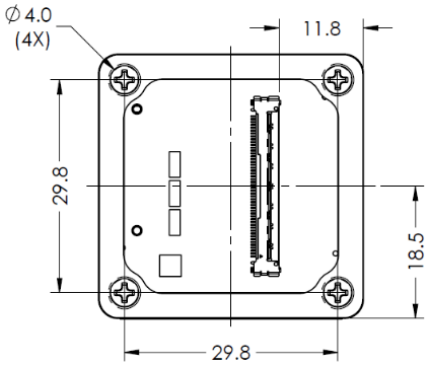

**Top View:**

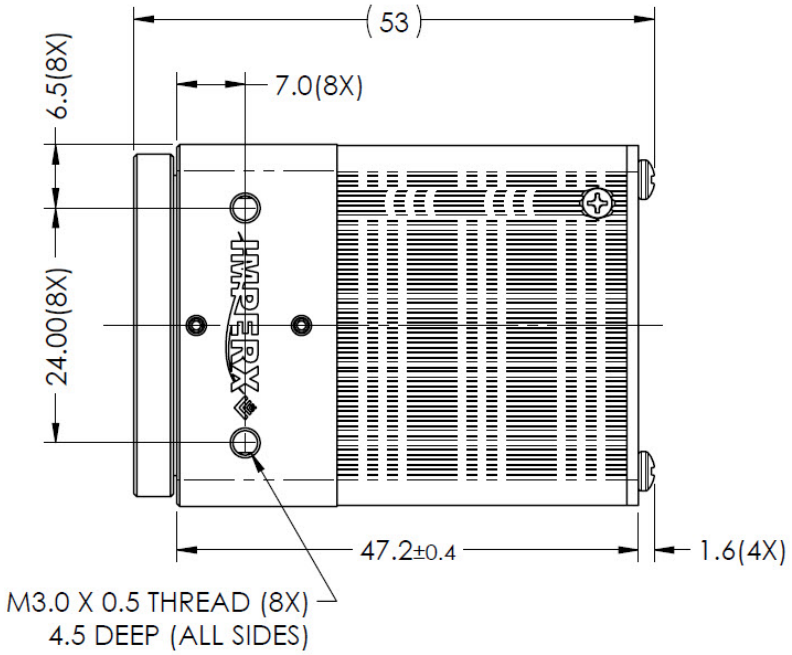


**Side View with Image Plane:**

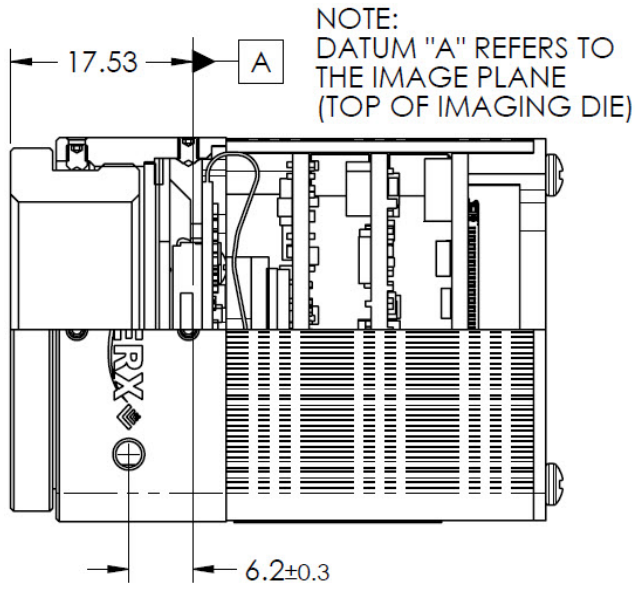

# C1621, C1921, C2020, C2420, C2420Y/Z, C2820, C3220, C4020, C4120, C4510, C5310, C5311, C1921-M, C2020-M, C2420-M, C2420Y/Z-M, C2820-M, C3220-M, C4020-M, C4120-M, C4510-M, C5310-M, C5311-M Cameras Mounting Plate

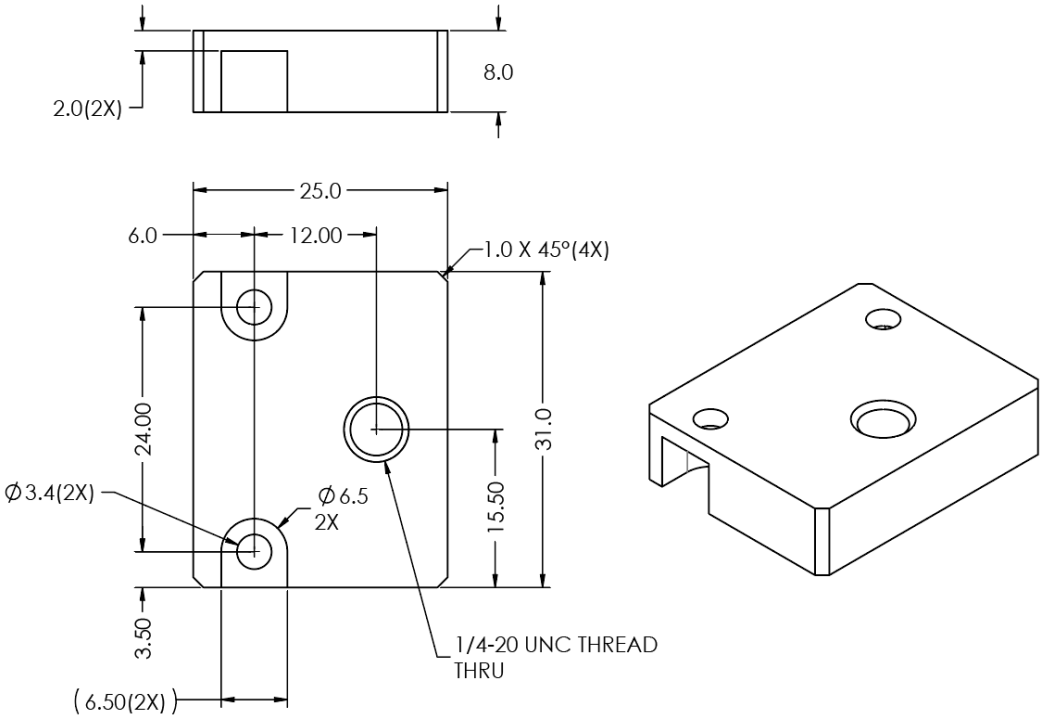

## C4420, C5420, and C6420 Cameras

The camera housing is made of precision-machined aluminum. For maximum flexibility, the camera has eight M3X0.5mm mounting holes located towards the front of the camera on all four sides. An additional plate with ¼-20 UNC (tripod mount) and hardware ship with each camera.

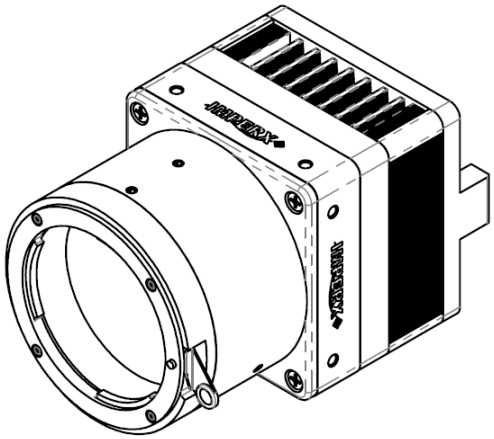

**Front View:**

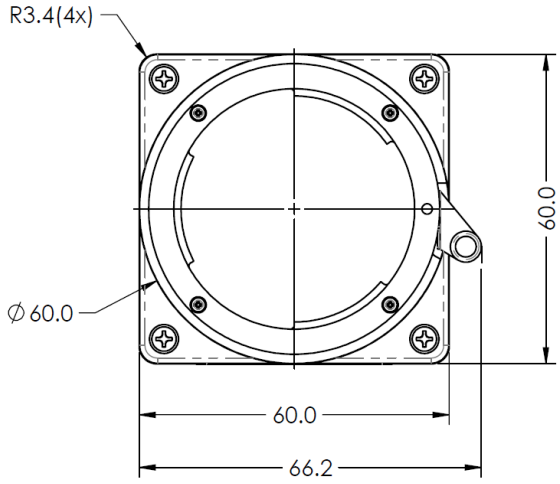


**Back View:**

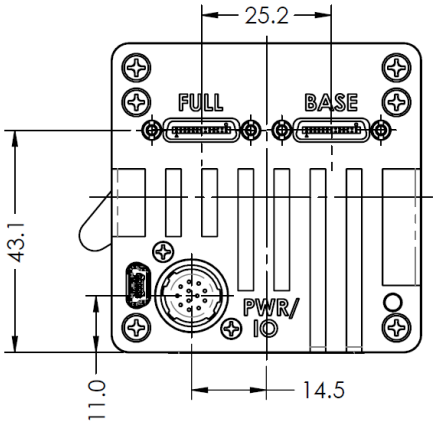

**Top view:**

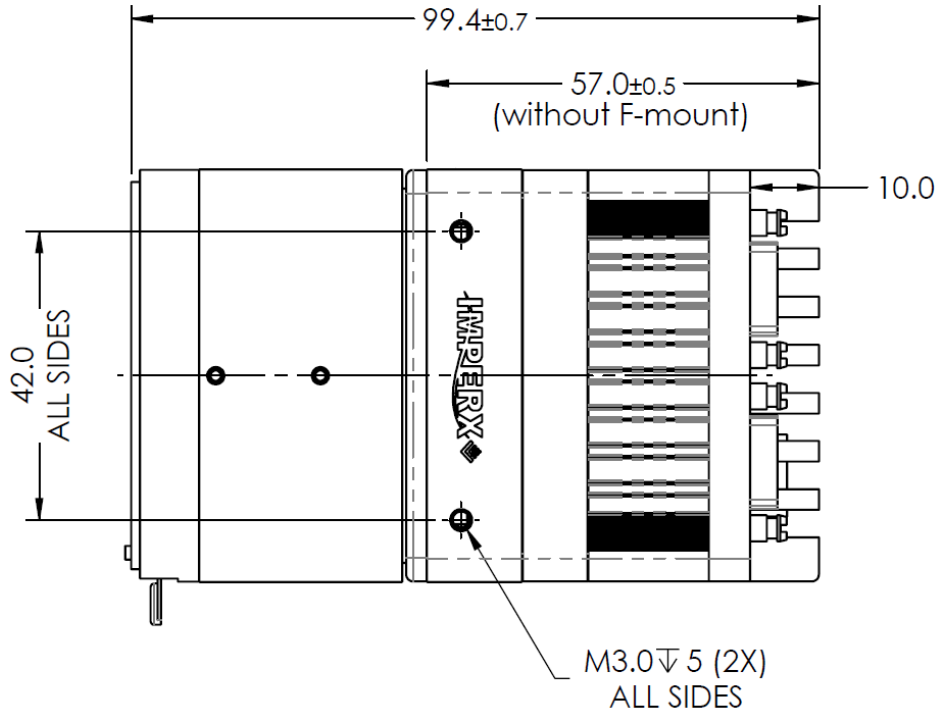


**Side view with Image Plane:**

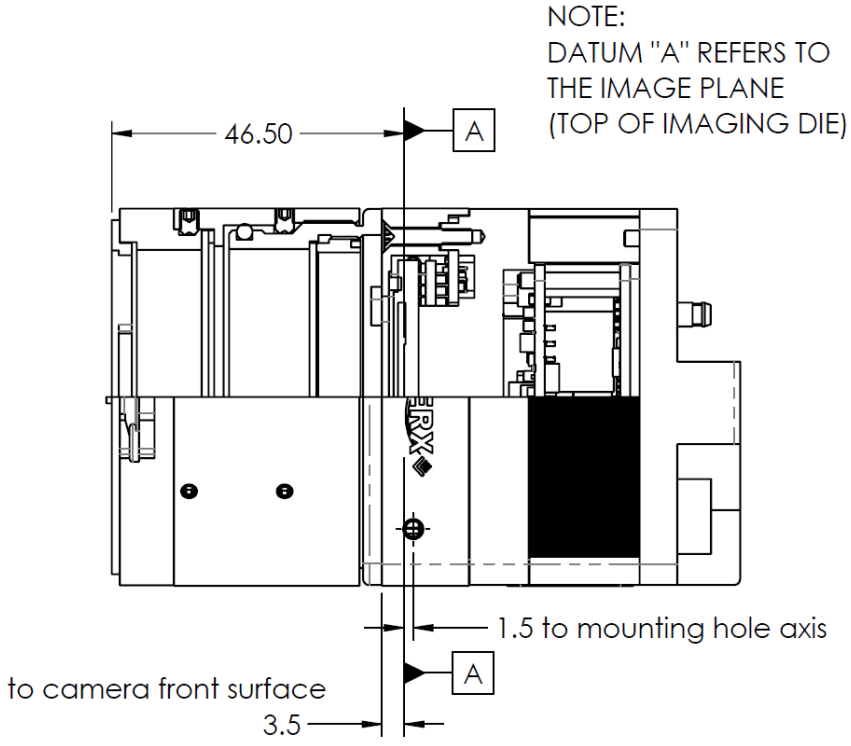

## C4420-T, C5420-T, and C6420-T Cameras

The camera housing is made of precision-machined aluminum. For maximum flexibility, the camera has eight M3X0.5mm mounting holes located towards the front of the camera on all four sides. An additional plate with ¼-20 UNC (tripod mount) and hardware ship with each camera.

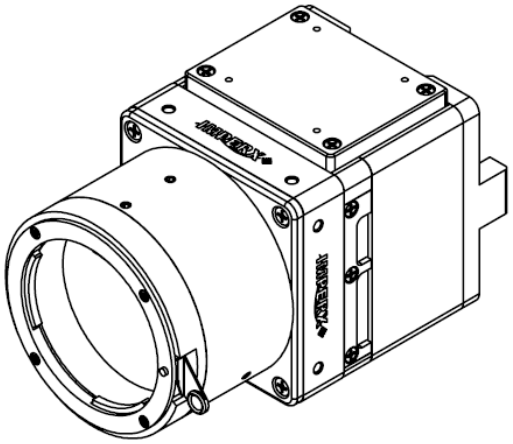

**Front View:**

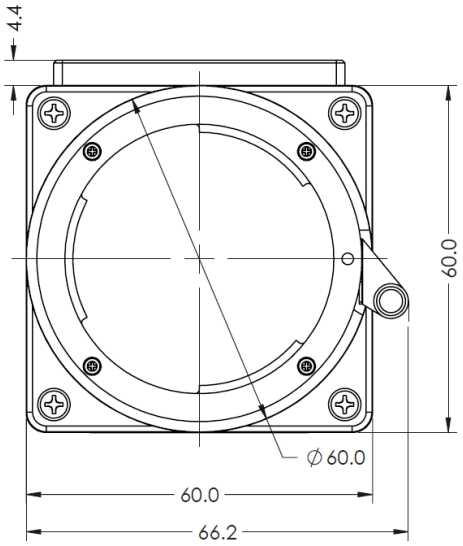


**Back View:**

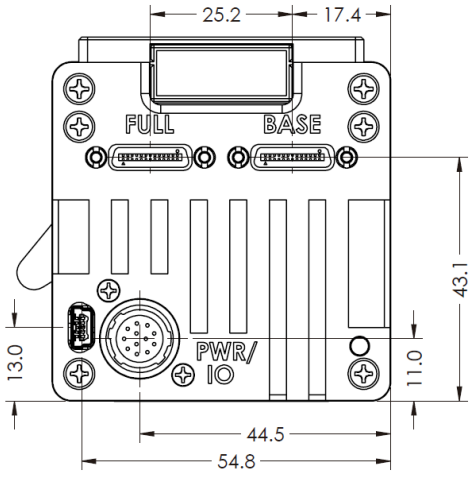

**Top view:**

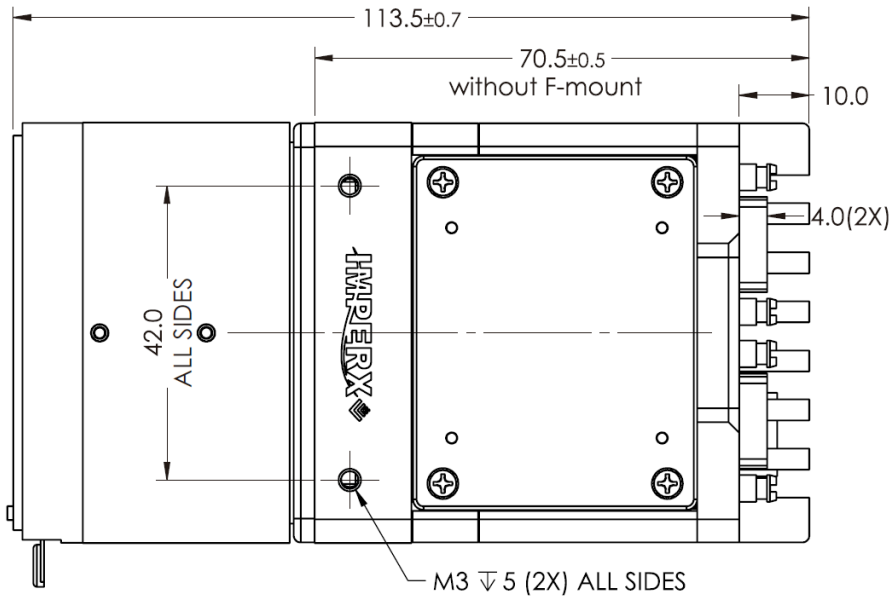


**Side view with Image Plane:**

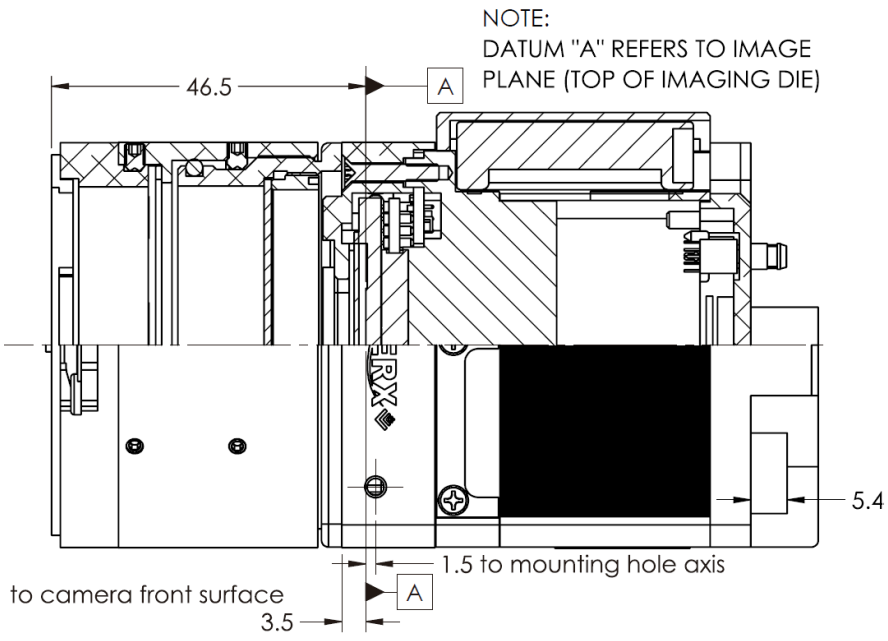

# C4420, C5420, C6420, C4420-T, C5420-T, and C6420-T Cameras Mounting Plate

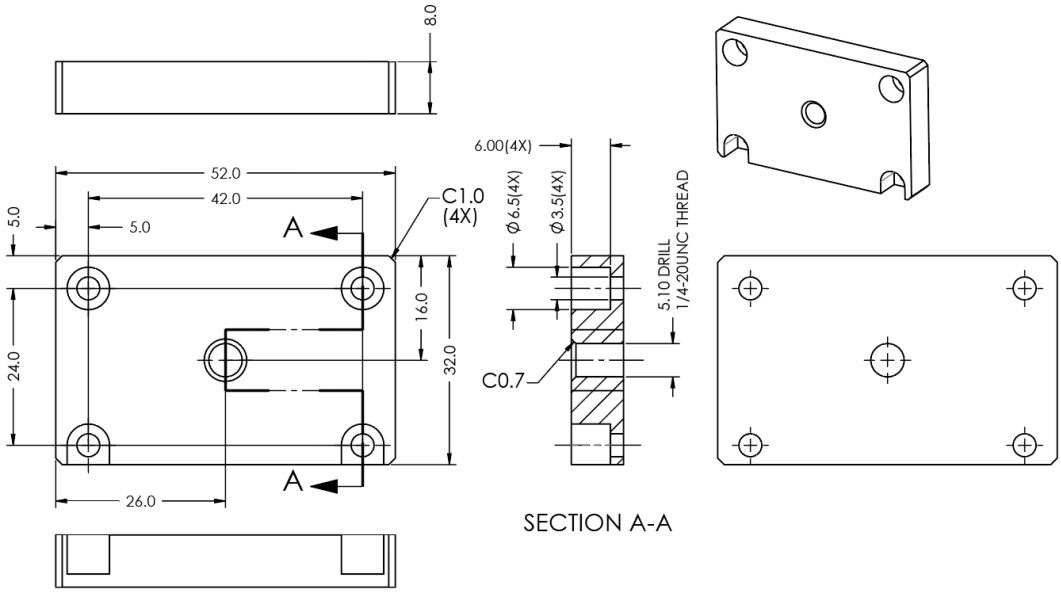

# Optical

The Cheetah Camera Link cameras  come with varying adapters for C-mount or F-mount lenses that have different back focal distances. You can use an F-mount lens with a C-mount camera using an F-mount–to-C-mount adapter. You can purchase the adapter separately (refer to the Imperx web site www.imperx.com for more information).

| Camera model | Lens Mount (default) | Back focal distance |
|---|---|---|
| C1621, C1921, C2020, C2420, C2420Y/Z, C2820, C3220, C4020, C4120, C4510, C5310, C5311 | C-Mount | 17.53 mm |
| C4420, C5420, C6420, C4420-T, C5420-T, C6420-T | F-Mount | 46.50 mm |

The camera is highly sensitive in the IR spectral region. All color cameras have an IR cut-off filter installed. Monochrome cameras do not have an IR filter. If necessary, the camera can accommodate an IR filter (1 mm thickness or less) inserted under the front lens bezel.

**⚠CAUTION**

Avoid direct exposure to a high intensity light source (such as a laser beam). This may damage the camera image sensor!

Avoid foreign particles on the surface of the image sensor.

Avoid touching or cleaning the front surface of the optical sensor. If the sensor needs cleaning, use soft lint free cloth and an optical cleaning fluid.

**Do not use methylated alcohol!**
Please refer to the Sensor Cleaning Procedure document found in the camera's ZIP file or contact Imperx support for cleaning procedures.

**TIP ⓘ**

Camera performance and signal to noise ratio (SNR) depend on the illumination (amount of light) reaching the sensor and the exposure time. Always try to balance these two factors. Unnecessarily long exposures increase the amount of dark noise and thus decrease the signal to noise ratio.

# Environmental

Always operate the camera within temperature and humidity specifications listed below.

| Specification | Definition |
|---|---|
| Operating temperature | -30 °C to +75 °C<br>-50 °C to +75 °C (cameras with internal heater) |
| Storage temperature | -40 °C to + 85 °C |
| Relative humidity | 10% to 90% |

**⚠CAUTION**

Avoid direct exposure to moisture and liquids. The camera housing is not hermetically sealed, and any exposure to liquids may damage the camera electronics!

Avoid operating in an environment without any air circulation, near an intensive heat source, strong magnetic or electric fields.

# Configuration Software

## Overview

The Cheetah Pregius CamConfig software ships with each Cheetah Camera Link cameras. After installing the software, you can program the camera, change its settings, and save the settings in a file or in the camera using the Camera Link interface. The software provides a help file to assist in setting up the camera.

The CamConfig software is compatible with the following operating systems:

- Windows 10, 32-bit and 64-bit

## Installing the Software

Use the installation wizard to install the Cheetah Pregius CamConfig software supplied with your camera.

If a previous version of the GUI software is installed on your computer, you must remove it before completing the installation. The installation wizard will do this for you during the installation process. Or, you can uninstall a previous version yourself.

**To remove previous versions yourself:**

1. Open **Control Panel** on your computer.
2. Select **Programs and Features**.
3. Select the software from the list.
4. Click **Uninstall**.

### Installation

1. Locate the executable file (Cheetah_Pregius_x_x_x_xxxx.exe) in the ZIP folder available upon registering your camera on the Imperx website.
2. Drag the file to your computer desktop. If a Security screen appears, click **OK**.

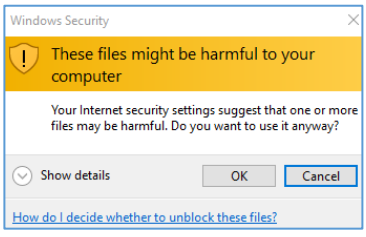

3. Double click the executable file (Cheetah_Pregius_x_x_x_xxxx.exe) on your desktop. The Welcome Setup screen opens. Note the recommendation to close other applications and then click **Next**.

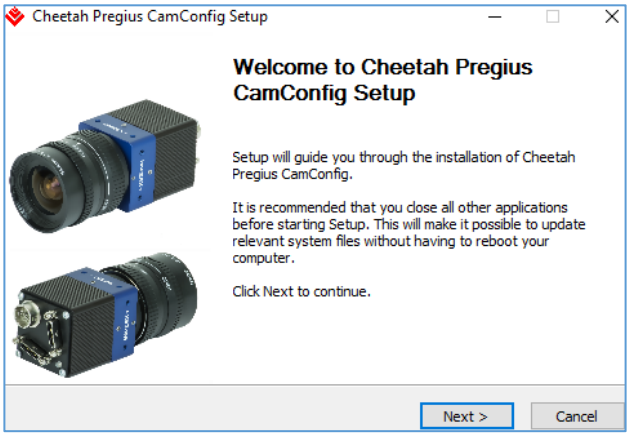


4. When the License Agreement screen appears, read the agreement and click **I Agree**.

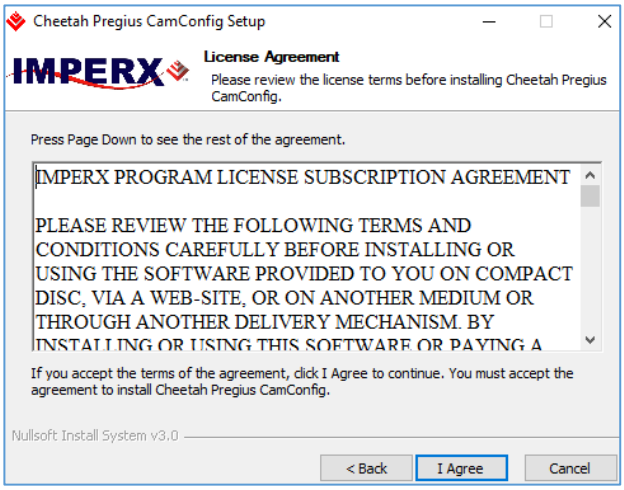

5. On the Choose Components screen, make sure the Cheetah Pregius CamConfig component is selected and then click **Next**.

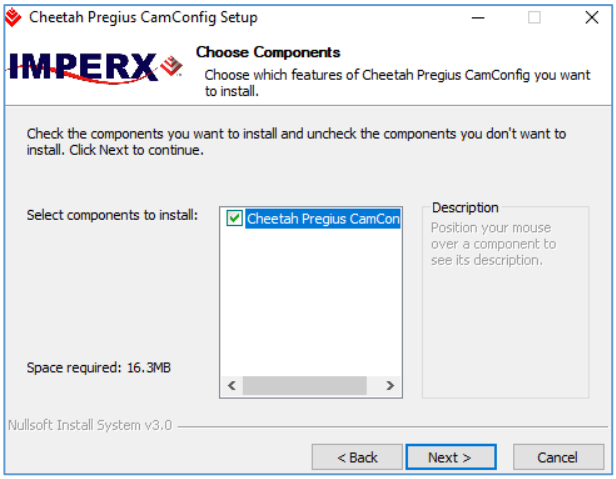


6. On the Choose Install Location screen, accept the default destination folder or click **Browse** and select a different location and then click **Install**.

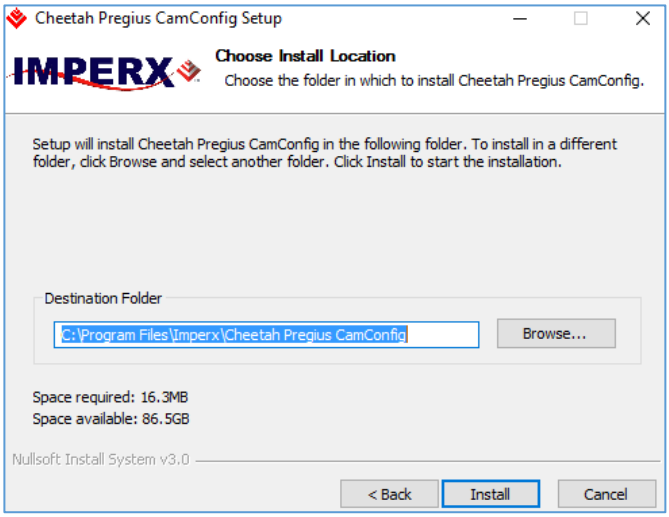


The installer prompts you to uninstall any existing versions of the software from your computer before continuing the installation

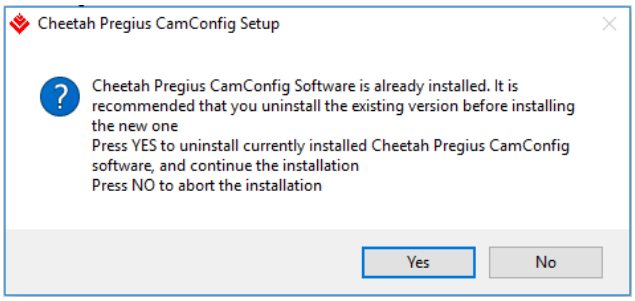

7. On the Installation Complete screen, select the check box to register your software and then click **Next**. When the Imperx website appears, complete the Subscriber Registration and click **Submit**.

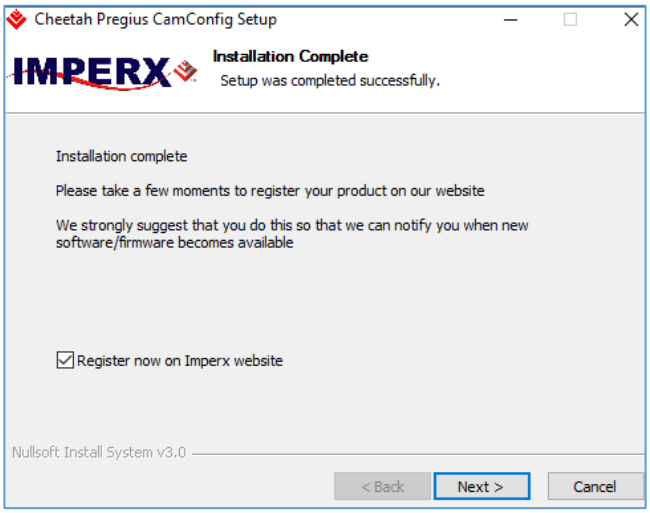


8. On the Completing Cheetah Pregius CamConfig Setup screen, click **Finish**. The Cheetah Pregius Configurator icon appears on your desktop.

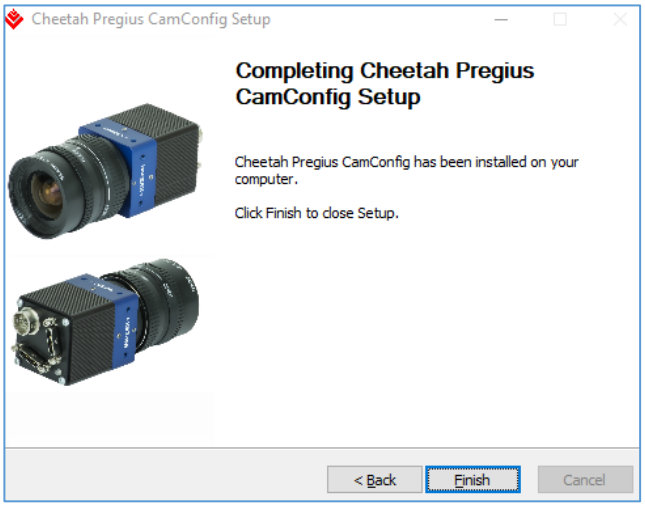

# Starting CamConfig

Users sometimes install multiple frame grabbers and cameras on the same host computer. The CamConfig software automatically discovers all available Universal Asynchronous Receiver/Transmitter (UART) components on the computer and lets you select the one connected to the camera.

The CamConfig software also searches for any available COM ports installed on the host computer. It communicates with each COM port and attempts to query the attached camera. If the software detects an attached Imperx Cheetah camera, it displays the port and camera type on the Select Port screen. You can repeat the discovery procedure by clicking Rescan Ports.

**TIP** ⓘ If the software does not find your computer's COM ports, you might need to locate your frame grabber's DLL file and move it to C:\Windows\System32. You can search File Explorer for the DLL file by entering clser* in the search field. Note: your frame grabber's vendor name abbreviation should appear where XXX is shown in the clserXXX.dll file name.

**To select a camera for programming:**

1. Open the CamConfig software.

2. On the Select Port screen, click the camera of interest.

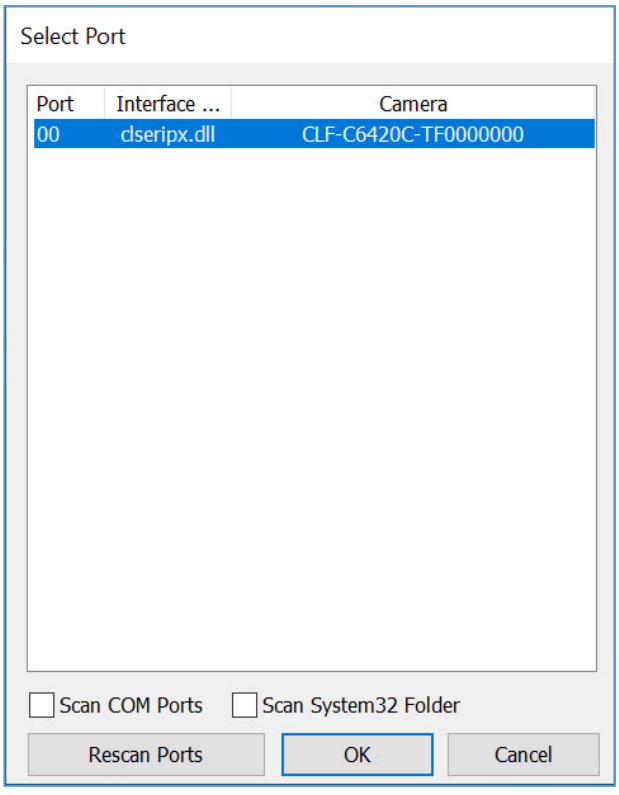


3. Click **OK**. The CamConfig Main panel appears.

# Main Window

The main window appears after you select a camera. It provides menu and view options, a help file, camera information, and configuration options. The camera's name and status appear at the bottom of the main window. The status indicator next to the camera name turns red if the connection between the camera and host computer is lost.

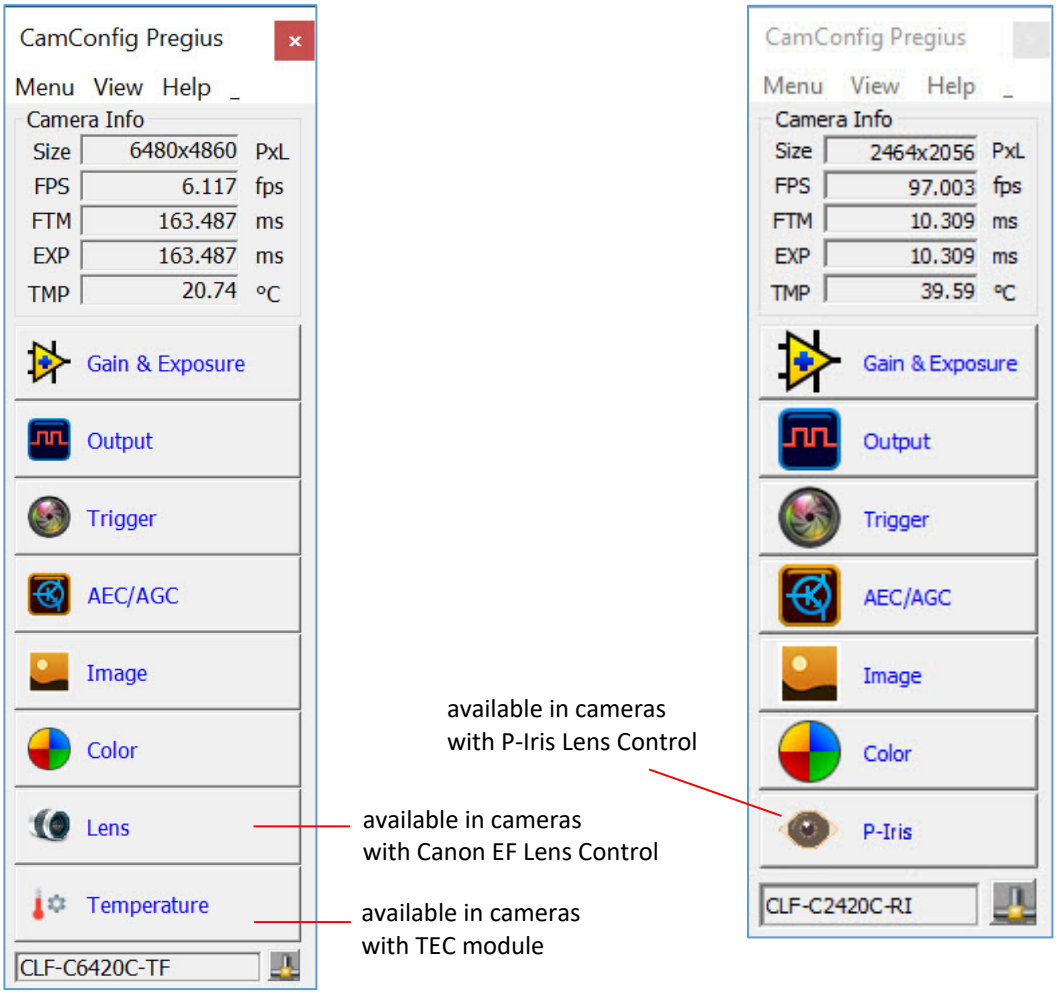


The window also displays real-time information about the camera's current conditions and operations based on the settings you implement. The software monitors the image size (in pixels), frame per second (FPS), frame time in milliseconds (FTM), and exposure time in milliseconds (EXP), and image sensor temperature in Celsius (TMP).

**NOTE** ⊛ The image sensor temperature is a rough value and accurate to ±5 °C tolerance. This feature cannot be used for precise measurements.

Only Cheetah cameras with TEC are calibrated to compensate for the difference. For these cameras, the image sensor temperature value is precise.

The Lens button appears if the camera supports Canon lens control functionality (CLF-C4420, CLF-C5420, CLF-C6420, CLF-C4420-T, CLF-C5420-T, and CLF-C6420-T cameras only)

The P-Iris button appears if the camera supports P-Iris lens control functionality (available in all cameras, except for C4420, C5420, C6420, C4420-T, C5420-T, and C6420-T ).

The Temperature button appears for cameras with thermoelectric cooling (CLF-C4420-T, CLF-C5420-T, and CLF-C6420-T cameras only).

## Menu

The Menu provides access to load options, settings, the command terminal, and more.

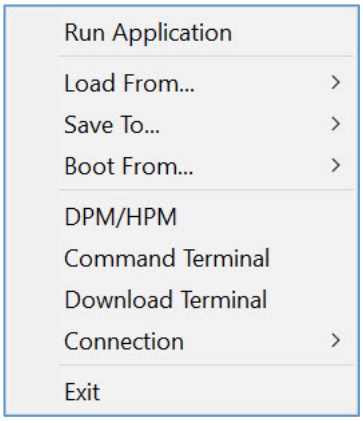


**Run Application**
This starts any other executable file that you normally use, such as a frame-grabber application. CamConfig remembers the location of such files in the host computer.

**Load From . . .**
This enables loading camera registers from a saved configuration space. Options are:

- **File:** Loads camera registers from a saved configuration file.
- **WorkSpace:** Updates the software with the current camera workspace settings.
- **Factory Space:** Loads the camera registers with the original factory settings.
- **User Space #1 to #4:** Loads the camera registers with settings saved within the camera from any of the camera user spaces: #1 to #4.

**Save To . . .**
You can save the camera registers to a file or the camera User Spaces. Factory Space is available only for factory technicians.

**Boot From . . .**
This enables loading the camera registers from the Factory configuration or from User Space #1, #2, #3, or #4 upon powering up.

**DPM/HPM**

When selected, the Bad Pixel Map window shows defective or hot pixels location. The maps are stored in the camera's non-volatile memory and are used to correct defective or hot pixels when bad pixel correction is enabled. The Factory maps defective and hot pixels according to stores the maps in the camera during factory calibration. Customers download the Factory DPM and HPM maps, add defective or hot pixels to the Factory map and then save the updated map to the DPM or HPM User spaces.

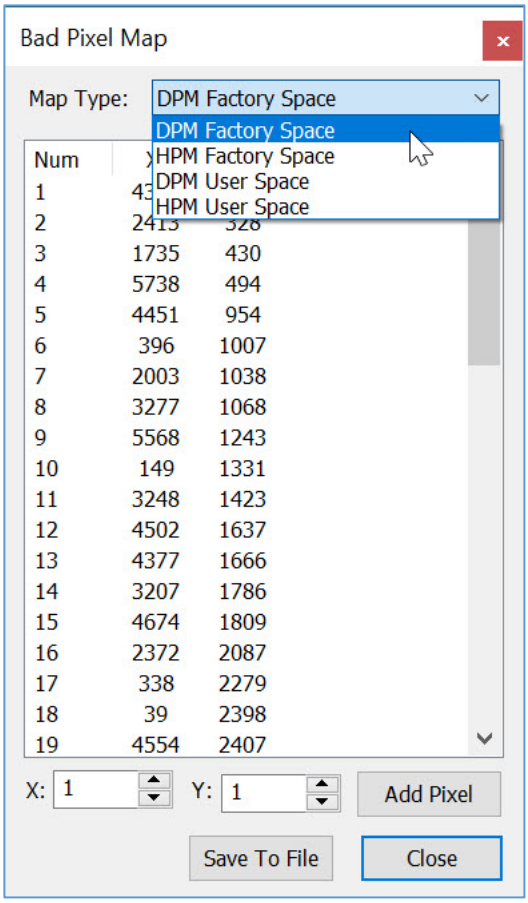


**Map Type**: selects what type of defect pixel map to show:

- **DPM (Defective Pixel Map)** – a map of pixels with sensitivity that deviates more than 15% due to fluctuations in the CMOS manufacturing process.
- **HPM (Hot Pixel Map)** – a map of pixels that during normal camera operation respond within specifications, but in long integration modes (programmable frame time) become high-intensity bright pixels.

**Add Pixel**: you can add a defective or hot pixel into DPM or HPM by entering its coordinates (see section Locating and Adding Pixel Coordinates, **STEP 4**).

**X and Y**: horizontal and vertical coordinates of the defective pixel. (See Locating and Adding Pixel Coordinates for determining exact coordinates based on your frame-grabber).

**Save To File**: saves the map shown in Defect Pixel Map window into a .dpm or .hpm file.

**To add a group of defective pixels into DPM or HPM:**

1. Save a map that you want to add pixels to on your computer by clicking **Save to File**. The file will have extension .dpm or .hpm.

2. Open the file using any standard ASCII text editor, Microsoft Notepad, or Microsoft Excel.

3. Add defective pixels, save changes and close the file (see Appendix B, section Editing HPM Files for more information on how to add pixels).

4. Select **Menu** > **Download Terminal** on GUI.
5. Click **File Type** and select a file **DPM** or **HPM**.

6. Enter or browse to the location of the file that you saved in step 3.

7. Select the file you want to download.

8. Click **Load File**.

9. Reboot the camera and restart the GUI for the changes to take the effect.

**Command Terminal**

The Command Terminal shows information about all commands sent to or received by the camera. It also lets you communicate directly with the camera by entering write or read commands directly into the text box on the Command Terminal screen.

To write a command to a camera register, the command terminal must send a sequence of 7 bytes to the camera. The write command must start with 0x followed by 57, the register address, and data.

**Example 1:**
Write to register address 0x0410, data value = 0x11223344:
Camera Write Command: <0x57> <04> <10> <11> <22> <33> <44>

To read a command from a camera register, the command terminal must send a sequence of 3 bytes to the camera. The read command must start with 0x followed by 52 and the register address.

**Example 2:**
Read from register address 0x0410:
Camera Read Command: <0x52> <04> <10>

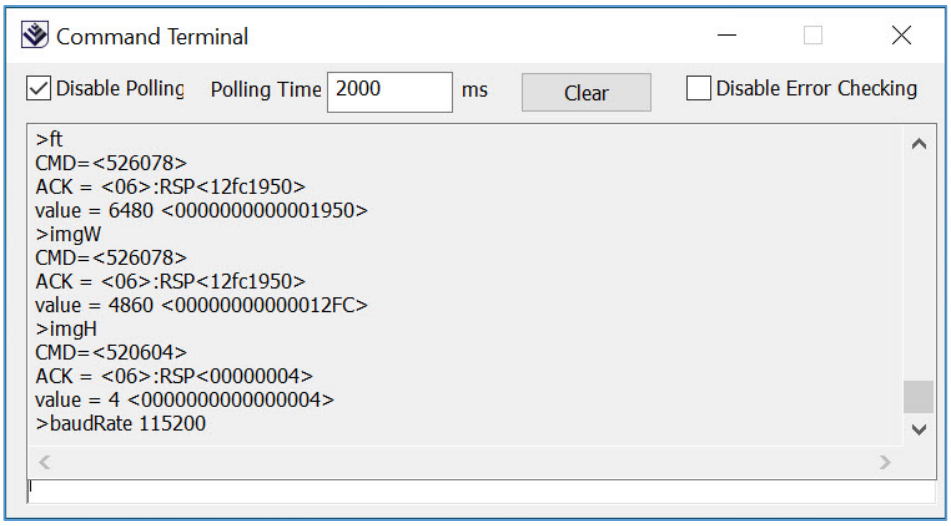


**Disable Polling**: Turns polling commands on or off for frame time, exposure time, frame rate, and so on.

**Polling time**: You can change the polling time in milliseconds by entering a number in the Polling Time field.

**Disable Error Checking**: The software displays error messages when the camera returns a command error. You can disable error checking by selecting the Disable Error Checking check box.

**Download Terminal**

The Download Terminal lets you upgrade the camera's firmware and upload any custom files — DPM, HPM, Flat Field Correction (FFC), Lookup Tables (LUT), or Register Set (RGS).

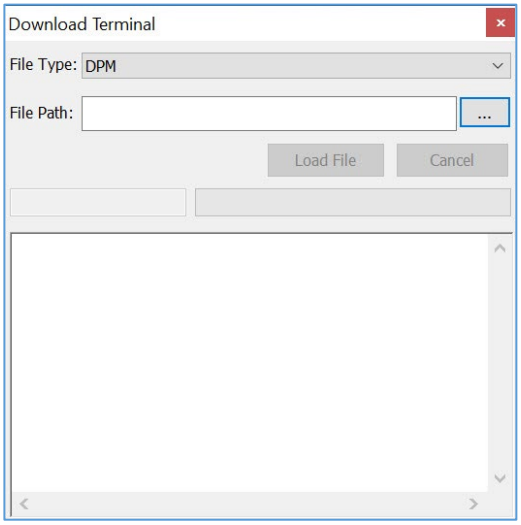


**To download files to the camera:**

1. Click **File Type** and select a file type such as DPM, HPM, FFC, RGS, or LUT.

2. Enter or browse to the location of the file on your computer.

3. Select the file you want to download.

4. Click **Load File**.

5. Reboot the camera and restart the GUI for the changes to take into effect.

**Connection**

Use the Connection menu to switch ports and change baud rates.

**Switch Port:** use this option to switch the COM port/camera. You can also Rescan Ports before switching.

**Set Baud Rate**: use this to change the speed of data transmission. A higher baud rate number indicates the transfer of more bits per second. Baud rates are 9600, 19200, 28400, 57600, and 115200. The factory default is 115200.

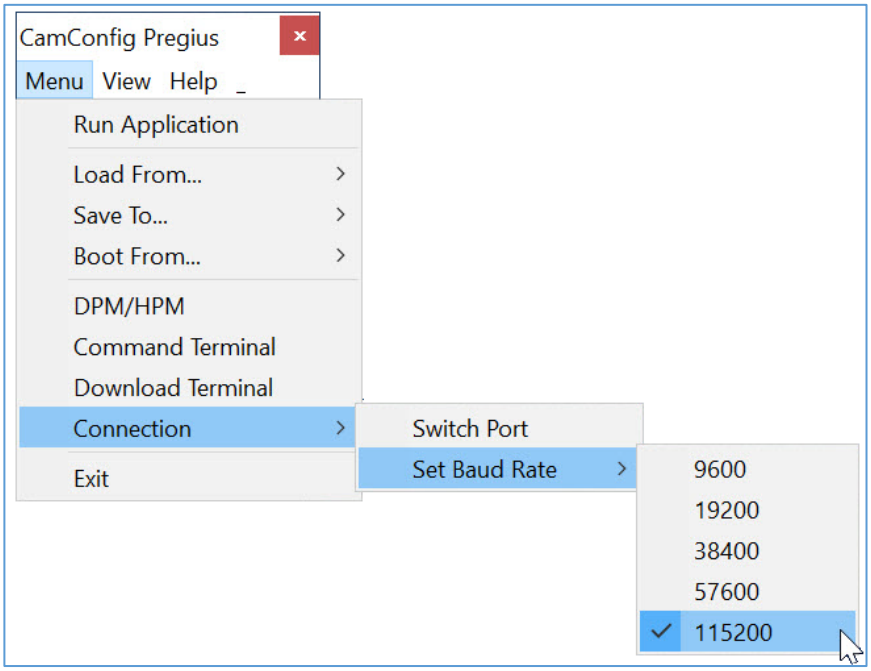

## View

Use the View menu to display or hide the following panels: Gain & Exposure, Output Control, Trigger Control, AEC/AGC Control, Image Parameters, and Color Control on the screen.

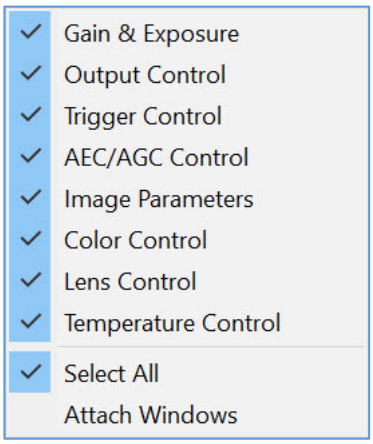


**Gain & Exposure**
Controls the exposure time, frame time, analog and digital gain, and black level.

**Output Control**
Sets the output data format, enables and controls the camera strobe signals, internal pulse generator which can be used to generate trigger or output signals.

**Trigger Control**
Controls the camera triggering features.

**AGC/AEC Control**
Maintains consistent image brightness during times of fluctuating lighting conditions. You can enable both automatic exposure mode and automatic gain mode simultaneously.

**Image Parameters**
Sets output data format, AOI, enables Look-Up Tables, DPC, HPC, and test patterns

**Color Control**
Sets the white balance mode. Displays WBC values.

**Lens Control**
Controls the focus and iris position of a Canon EF EOS lens (C4420, C5420, C6420, CLF-C4420-T, CLF-C5420-T, and CLF-C6420-T cameras only).

**Temperature Control**
Sets mode and target temperature for the TEC module (available for the CLF-C4420-T, CLF-C5420-T, and CLF-C6420-T cameras only).

**Select All**
Enables all camera parameter windows.

**Attach Windows**
Attaches all camera parameter windows to the main GUI window.

# Help

Help provides access to a user help file and the following options:

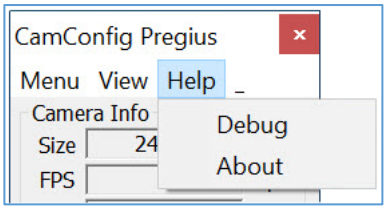


**Debug**
Puts the software in debug mode for test purposes and troubleshooting.

**About**
Provides information about the application version and camera's firmware build, revision, image sensor, and other components.

# Gain & Exposure

Gain and Exposure Control enables adjustments to analog gain, digital gain and offset, black level, and exposure Modes.

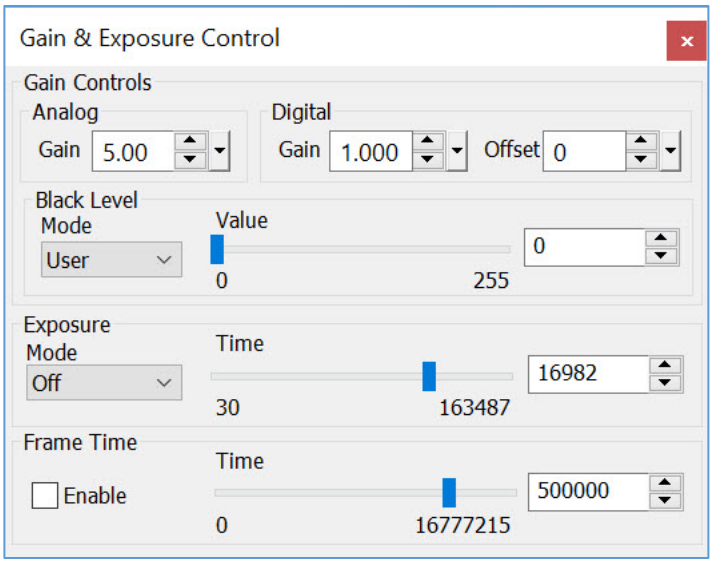


**Analog Gain** Amplifies the image signal before converting the signal to digital data. You can set the analog gain from 0 to 48 dB in 0.1 dB steps.

**Digital Gain** Increases image brightness by multiplying the data by a fixed number (1.0x to 4.0x in 0.001x increments).

**Digital Offset** Digital Offset increases the image brightness by adding a fixed number (a count) to data (-512 to +511 in 1-step increments).

**Black Level Mode** Enables black level correction. Black Level Mode options are User and Auto. Use the slider to adjust the black level from 0 to full-scale. (Response is non-linear).

**TIP** ⓘ Choose Auto Black Level mode with value of 5 to optimize dynamic range without black level clipping for short exposures and 10 to 15 for long exposures.

**Exposure Mode**

Use the following to set the camera exposure:

- **Off** – Sets the exposure time equal to the frame period.
- **Pulse Width** – Sets the exposure time equal to the trigger's input pulse width. Trigger mode must be enabled (see section Trigger Options).
- **Internal** – Sets the internal camera timer control exposure based on the Exposure Time setting. Use the slider to adjust the Exposure Time from 0 to one frame time in microseconds.

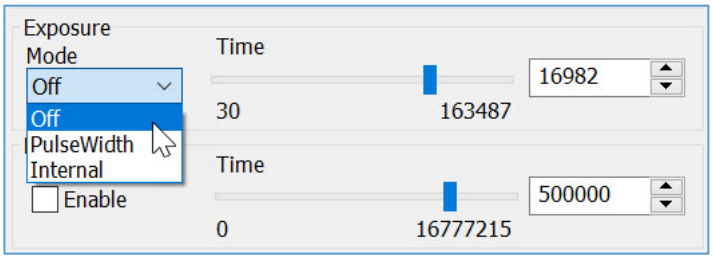


**Frame Time**

This is the time required to read out the entire frame. Select the check box to enable Frame Time control. You can set the value from one frame time to 16,777,215 microseconds (~16.8 seconds).

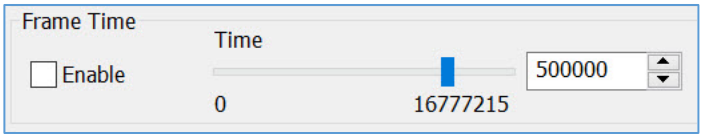

# Output

Output Control lets you map the camera output to various internal signals, configure the two strobe outputs, and adjust the optional pulse generator.

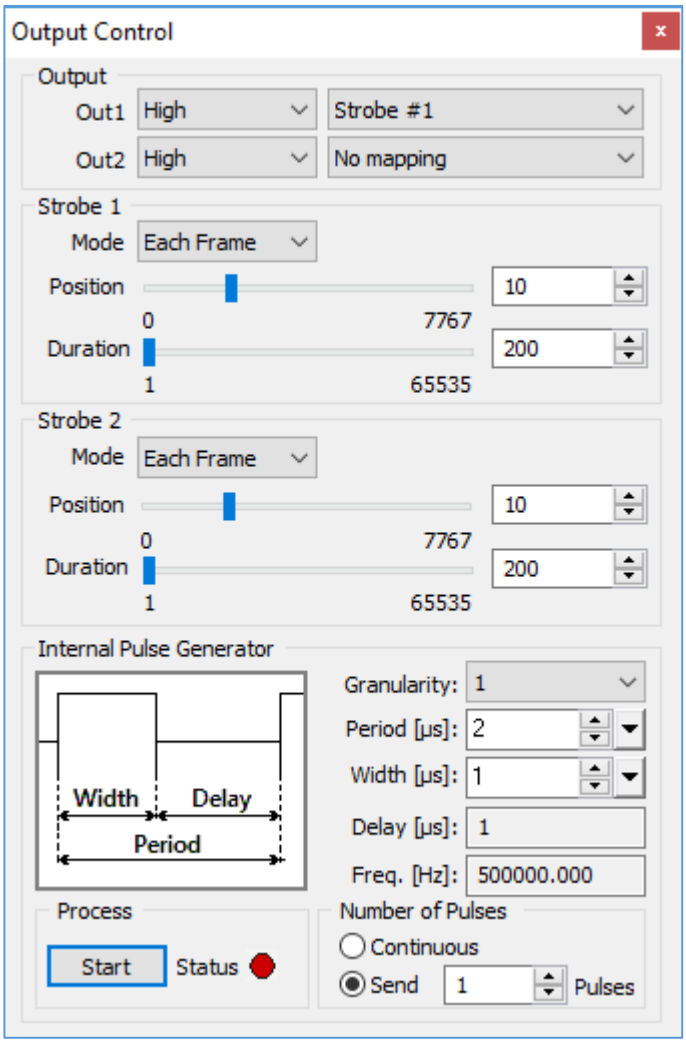


## Output (OUT1 and OUT2)

The Output section enables mapping the camera's two outputs (OUT1 and OUT2) to internally generated signals. For each output, you can set the signal level to active High or active Low.

The following internal signals are available for mapping.

| Output Signals | Description |
|---|---|
| Exposure Start | A short pulse (2µs) indicating the beginning of the camera exposure. |
| Exposure End | A short pulse (2µs) indicating the end of the camera exposure. |
| Mid Exposure | A short pulse (2µs) indicating the middle of the camera exposure. |
| Active Exposure Window | A signal indicating the duration of the camera exposure. |

| Output Signals | Description |
|---|---|
| H-Sync | A short pulse (2µs) synchronized with the camera line timing. |
| V-Sync | A short pulse (2µs) synchronized with the camera frame timing. |
| Odd/Even Frame Flag | A signal based on the camera's internal timing for indicating either odd or even frame. It alternates with every frame. If the output is set as High, it represents the even frame; odd is low. |
| Trigger Pulse | Maps the input trigger pulse to the output with no delay (as is). |
| Trigger Pulse Delayed | Maps the input trigger pulse to the output with delay set by the Exposure Delay Register. |
| Camera Ready | A signal indicating when the camera is ready to accept the next trigger pulse. |
| Pulse Generator | Maps the internal pulse generator waveform to the output. |
| Strobe #1 | Maps the Strobe 1 signal to the corresponding external output. |
| Strobe #2 | Maps the Strobe 2 signal to the corresponding external output. |
| Toggle | Controls the active polarity of the output signal. |
| Frame Pulse | Maps the Vertical Frame Transfer pulse. |

## Strobes 1 and 2

You can set the operational Mode, Position, and Delay for strobe 1 and Strobe 2 independently.

**Mode**

When setting up a strobe, you must assign it to a frame. Use the Mode drop-down menu to assign the strobe pulse to the following:

- Disable
- Each Frame
- Odd Frames
- Even Frames

**Position and Duration**

You can set the position and duration of each strobe within the entire frame timing period with a precision of 1.0 microsecond.

- The position determines when the strobe turns on during the frame period.
- The duration determines how long the strobe stays on.

## Pulse Generator

In this section of the screen, you can configure the parameters of the Internal Pulse Generator.

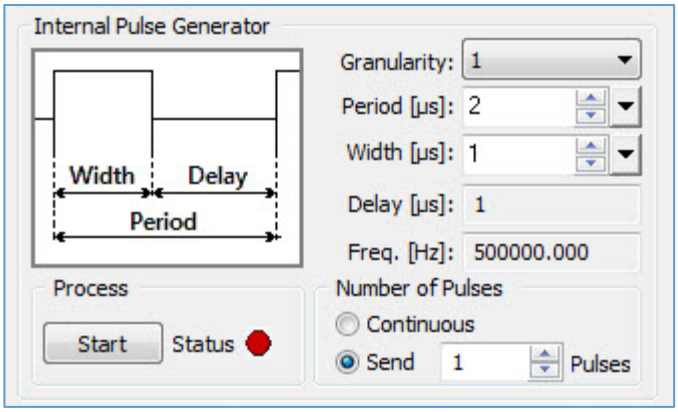


**Granularity** Indicates the number of clock cycles for each increment of the width and the period. The main resolution is in microseconds, and four granularity steps are possible: x1, x10, x100 and x 1000 (x1000 is equal to 1ms timing resolution).

**Period** Sets the amount of time in microseconds (determined by the granularity setting) between consecutive pulses.

**Width** Sets the amount of time in microseconds (determined by the granularity setting) the pulse remains at a high level before falling to a low level.

**Delay** Shows the delay calculated in microseconds as Period minus Width.

**Frequency** Shows the frequency calculated as 1/Period.

**Number of Pulses** Enables sending pulses either continuously or by a set number of pulses. Two modes are available:

- **Continuous** – provides a continuous operation. Click **Stop** button to end.
- **Send** – Generates a discrete number of pulses (1 to 65535). Click **Stop** to end or allow the process to end after sending the last pulse.

**Process Start** Allows you to manually start and stop the pulse generator. The Status LED indicates the following:

- Red: Pulse Generator is stopped
- Green: Pulse Generator is operational

# Trigger Control

Trigger Control lets you configure the camera's trigger options and trigger strobe options.

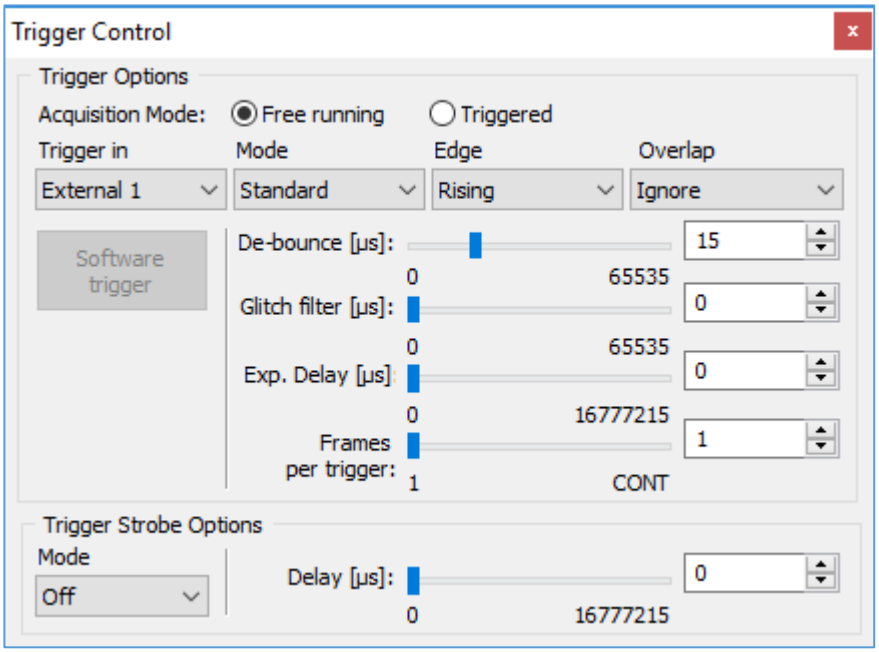


## Trigger Options

The Cheetah camera operates in free running mode or trigger mode. In free running mode, the camera runs without synchronization. In trigger mode, the camera waits for the trigger to start the image capture, synchronizing it to an external event.

To use triggers, select Trigger on the main menu. Use the following options to configure the trigger source and other settings:

**Trigger in** Select one of the following active triggering input signals from the drop-down list:

- **External 1** – The camera expects a trigger signal coming from External INPUT 1.
- **Pulse Gen** – The camera expects a trigger signal coming from the internal pulse generator.
- **Computer** – The camera expects a signal coming from CC 1.
- **Software** – Triggering starts when you click the software trigger button.
- **External 2** – The camera expects a trigger signal coming from External INPUT 2.

**Mode** Select a mode from the drop-down list:

- **Standard** – The camera waits for the trigger, then exposes using the internal exposure timer and then reads out the frame. The exposure occurs first followed by readout.
- **Fast** – The camera exposes a frame and then exposes the next frame while reading the previous frame. In this way, the camera overlaps the exposure and readout times. Fast trigger requires a predictable and stable trigger period.

**Edge** Select the active triggering edge of the trigger pulse:

- **Rising**: Uses the rising edge of the trigger pulse to start the exposure.
- **Falling**: Uses the falling edge of the trigger pulse to start the exposure.

**Overlap** Selects how to handle the next trigger pulse if a trigger is received while the previous triggering cycle is in process:

- **Ignore**: Camera ignores the next trigger and continues its present operation.
- **Accept**: Camera uses the next trigger. The camera will stop the present operation, then reset and start the new trigger cycle.

**De-bounce** This is designed to prevent multiple triggering from ringing on the trigger input pulses. The camera ignores additional triggers received during the de-bounce time. Set the de-bounce time between 0 and 65535 microseconds.

**Glitch Filter** Sets the minimum trigger pulse width. The camera ignores pulses with a width shorter than the selected value, which range from 0 to 65535 microseconds.

**Exposure Delay** Sets the delay between the trigger pulse active edge and beginning of the exposure. You can set the delay from 0 to 16777215 microseconds.

**Frames per trigger** When the Mode is Standard, this option lets you select the number of frames to capture (expose) and read out per trigger. Select from 1 to 65530 or CONT (continuous) frames.

## Trigger Strobe Options

The camera can send a strobe pulse to synchronize the camera to an external light source. The Trigger Strobe Options section lets you enable a strobe pulse with each trigger. From the Mode drop-down list, select from the following options:

- Off
- Strobe #1
- Strobe #2
- Both

You can set a delay with respect to the trigger pulse active edge from 0 to 16,777,215 microseconds (~16.8 seconds).

# AEC/AGC/AIC

Automatic exposure control (AEC) and automatic gain control (AGC) enables the camera to maintain the same image brightness under variable lighting conditions. The automatic exposure and gain control process drives the exposure and gain to achieve a target luminance level (in counts) specified in the Limit settings.

AEC/AGC Control also provides real-time statistics on the camera's exposure time, gain, and luminance values. When one of the camera's exposure or gain limits is reached, an indicator light on the screen changes color from green to red.

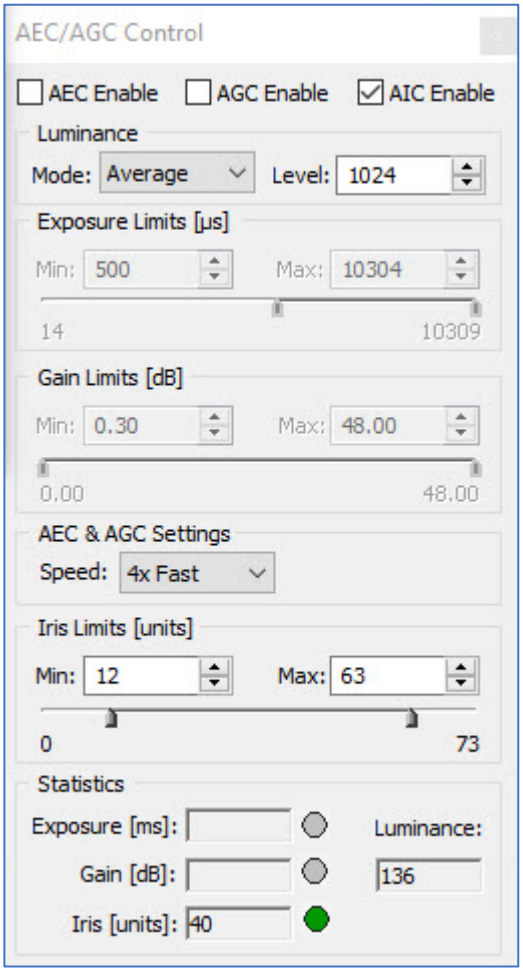


**AEC Enable, AGC Enable, AIC Enable:** Select the check box(es) to enable AEC, AGC, or AIC.

**Luminance:** Sets the desired luminance level to be maintained in the image. Two options are available: Average and Peak. Enter a desired luminance value in counts (ADUs) for either selection. The luminance is a 12-bit value so if using 8-bit output, multiply the desired image intensity in counts (ADU) by 16 to get the Luminance target value.

- **Average** – The camera calculates the average value of the image luminance within the image and compares that value to the value

entered in the Luminance field to determine changes to the exposure/gain settings.

- **Peak** – The camera calculates the peak luminance value (maximum luminance level) within the image and compares that value to the value entered in the Luminance field to determine changes to the exposure/gain settings.

**Exposure Limits:** Enter a minimum and a maximum limit. For example, if motion capture is important, specify a short maximum exposure to avoid motion blur. Exposure Limits range from 25 microseconds to a maximum limit of one frame time. Generally, the minimum exposure limit should be set to a minimum of 30 microseconds to avoid control loop oscillations when the scene illumination changes suddenly.

**Gain Limits:** Sets the minimum and maximum gain limits.

Gain Limits range from Min: 0 dB to Max: 48 dB.

**AEC & AGC Settings:** Sets the camera's exposure correction speed during AGC/AEC. Options are: 1x speed (slow), 2x speed, 3x speed, and 4x speed (fast).

**Iris Limits:** When enabling the automatic iris control for a P-Iris lens, you can specify the range of iris positions from minimum to maximum in steps. By default, the minimum iris limit is 0 which means the iris is Fully Open. The amount of light reaching the sensor is maximum.

The maximum iris limit is the number of steps needed to set the iris to the Fully Closed position. The amount of light reaching the sensor is minimum. The maximum possible iris limit depends on a lens model. By default, the maximum limit is set to 73. You may need to adjust this limit if the maximum number of steps of your P-Iris lens differs from 73. Please refer to the documentation on your lens for this parameter.

**Statistic**: Provides live information about the current value of the Exposure time, Gain, and Luminance. The values are refreshed every time polling is done. Two indicators provide status of the current exposure or gain:

- Green: the exposure/gain value is within the set limits.
- Yellow: the exposure/gain has reached a minimum limit value.
- Red: the exposure/gain has reached a maximum limit value.

# Image Control

The Image Parameters panel lets you configure the camera for your specific application, including Master Area of Interest (MAOI), Slave Area of Interest (SAOI), binning, polarization, image structure, image correction, and test mode.

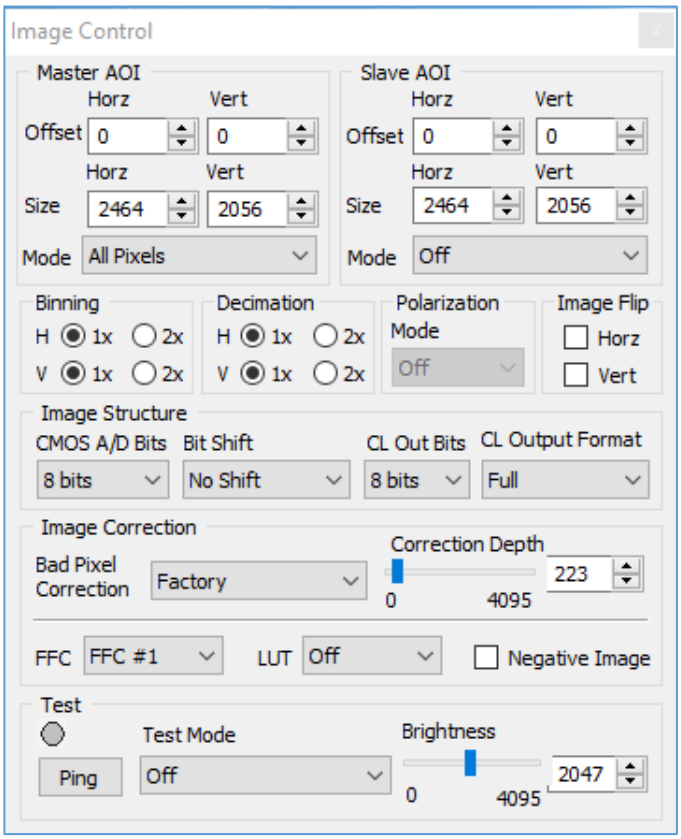


The AOI affects the camera's frame rates. The following table shows C2020 frame rates based on various AOI's.

| Product | AOI | FPS |
|---|---|---|
| C2020 | 2064 x 1544 | 149 |
| | 2064 x 516 | 426 |
| | 2064 x 256 | 802 |
| | 2064 x 128 | 1412 |
| | 2064 x 64 | 2302 |
| | 2064 x 32 | 3339 |
| | 2064 x 16 | 4310 |
| | 2064 x 8 | 5025 |
| | 2064 x 4 | 5494 |
| | 516 x 4 | 5494 |
| | 256 x 4 | 5494 |
| | 176 x 4 | 5494 |

## Master AOI

The Master AOI (MAOI) determines the current image size. You define the MAOI by specifying horizontal and vertical size dimensions and offset coordinates. The size dimensions specify the width and height of the AOI in pixels. The offset coordinates define the boundaries of the AOI. The horizontal and vertical dimensions and offsets are limited to multiples of 4 pixels.

**Mode**: A drop-down lets you select the following MOAI modes:

| Master AOI Modes | Descriptions |
|---|---|
| All Pixels | The entire image area is used. |
| Faster Frame Rate | Each AOI is read out sequentially without any vertical blanking to achieve the maximum possible frame rate. |
| Keep Frame Rates | The vertical size of the AOI can affect frame rates. The camera adds a vertical blanking interval after the image readout to maintain the frame rate. |

## Slave AOI

The Slave AOI (SAOI) is nested inside the Master AOI. You might use the SAOI for a region of interest for automatic gain control (AGC)/automatic exposure control (AEC), auto white balance (AWB), or LUT.

**Mode**: A drop-down lets you select the following SOAI modes:

| Slave AOI Modes | Descriptions |
|---|---|
| Off | Turns off all modes. |
| Include | Only pixels within the Slave AOI are included into the image, all pixels outside Slave AOI are excluded. |
| Exclude | Slave AOI pixels are excluded from the image, all pixels outside the Slave AOI are included. |
| AGC/AEC ROI Include | Pixels within the Slave AOI are used by Auto Gain Control (AGC) and/or Auto Exposure Control (AEC) to calculate the Luminance statistics. |
| AGC/AEC ROI Exclude | All pixels outside the Slave AOI are used for Auto Gain Control (AGC) and/or Auto Exposure Control (AEC) features to calculate the Luminance statistics. |
| AWB ROI Include | Pixels within the Slave AOI are used by the Auto White Balance (AWB) feature to calculate WB coefficients. |
| AWB ROI Exclude | All pixels outside the Slave AOI are used by the Auto White Balance (AWB) feature to calculate WB coefficients. |
| LUT ROI Include | The LUT is applied to pixels within the Slave AOI only. |
| LUT ROI Exclude | The LUT is applied only to pixels outside the Slave AOI. |

## Binning

Binning combines charges from adjacent pixels to enable faster readout speeds and improved signal to noise ratios. It also reduces spatial resolution. Binning is supported in all monochrome models except the C2420Y/Z camera.

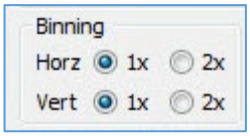


- Horizontal – Select radio button 2x to enable horizontal binning (1x is no binning).
- Vertical – Select radio button 2x to enable vertical binning (1x is no binning).

**NOTE** ⊛ If planning to use both Binning and an Area of Interest (AOI), you must set up binning before defining the AOI.

After activating Binning and AOI, if you want to change the CMOS A/D Bits settings, use the following procedure:

1. Turn off Binning and AOI.
2. Set Binning by clicking 2x for both horizontal and vertical.
3. Set the AOI horizontal and vertical sizes.
4. Select a new CMOS A/D Bits. Options are 8 bits, 10 bits, or 12 bits.

## Decimation

Decimation is the use of sub-sampling to reduce output resolution.

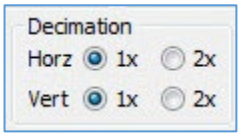


- Horizontal – Select radio buttons 2x to enable horizontal decimation (1x – no image change).
- Vertical – Select radio buttons 2x to enable vertical decimation (1x – no image change).

The C2420Y/Z camera does not support sub-sampling.

**NOTE** ⊛ When using both Decimation and Master Area of Interest (MAOI), only mode *Keep Frame Rate* is supported. If Decimation is enabled, and then MAOI is set to *Fast Frame Rate*, the new image has the resolution set by MAOI and Decimation is ignored.

The first pixel read out is red in Sony Pregius CMOS color sensors. However, in Gen 4 Sony Pregius S color sensors (used in CLF-C4510C, CLF-C5310C, and CLF-C5311C cameras), the first pixel read out is green when decimation is enabled. To keep the same color structure and compensate for the wrong starting color, two lines are automatically skipped after the decimation has been enabled (one line – at the top, one line – at the bottom of the sensor).

The vertical resolution of the camera with a Gen 4 Sony Pregius S sensor when vertical decimation is enabled:

$$\frac{Full\ Resolution}{2} - 2\ lines$$

# Polarization Mode – C2420Y/Z Camera

Polarization mode activates the polarization capabilities of the C2420Y/Z camera. When the polarization mode is Off, the values of each pixel are output. The output image of the C2420Y/Z camera has a resolution of 2464 (H) x 2056 (V) pixels.
The camera's micro-polarized sensor has a 2x2 pixel sub-array where each pixel blocks a different polarization filter angle (0, 45, 90 or 135 degrees). The output image consists of pixels with selected polarization angle, other pixels are discarded. This reduces the vertical and horizontal resolution of the image by 2. The camera produces a resolution of 1232 x 1028 per polarization angle.

To activate polarization, select one of the following filter angles:

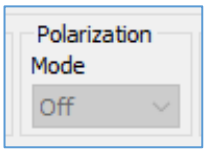


- 0 degrees
- 45 degrees
- 90 degrees
- 135 degrees
- Circular

In the example below, a polarization angle of 90° is selected, and the resulting image consists of the pixels framed in black.

For monochrome models:

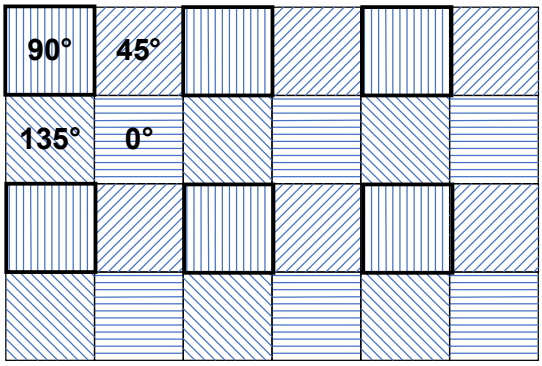


For color models:

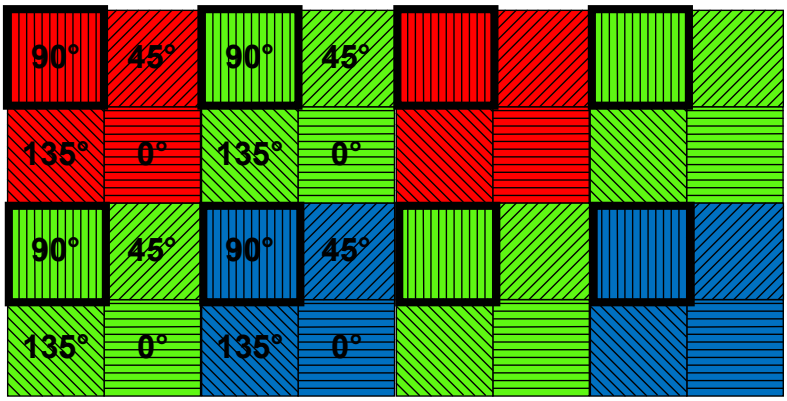

## Image Flip

Image Flip allows you to flip an active image.

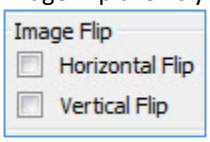


- Horizontal. Select the check box to enable the horizontal flip.
- Vertical. Select the check box to enable the vertical flip.

## Image Structure

The Image Control screen provides options for adjusting your image structure bits, bit shift, Camera Link out bits, and Camera Link output format.

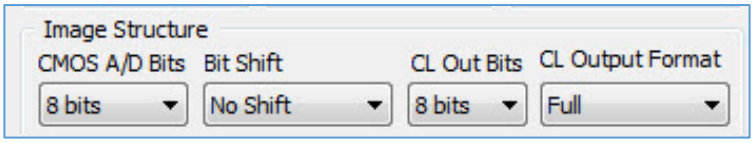


**CMOS A/D Bits** Determines the amount of tonal information available from the image sensor. Bit depth options are 8 bits, 10 bits, or 12 bits. Faster frame rates are possible at lower bit depths.

**Bit Shift** Changes the relative weighting of the output data by shifting bits to the left or to the right by a number of bit positions (positions are 1x, 2x, 3x, up to 7x).

**CL Out Bits** Sets the number of bits per pixel output to the Camera Link output. Options are 8, 10, and 12 bits.

**CL Output Format** Sets the number of Camera Link output taps used. Options are Base (2 taps or 3 taps), Medium (4 taps), and Full (8 taps), DECA (8 taps, 10 bits).

You can set the following combinations of CMOS A/D Bits, CL Out Bits, and CL Output Format:

| CMOS A/D Bits | CL Out Bits | CL output Format |
|---|---|---|
| 8 bits | 8 bits | Base 2x or Base 3x |
| | 8 bits | Medium (4 taps) |
| | 8 bits | Full (8 taps) |
| 10 bits | 8 bits | Base 2x or Base 3x |
| | 8 bits | Medium (4 taps) |
| | 8 bits | Full (8 taps) |
| | 10 bits | Base 2x or Base 3x |
| | 10 bits | Medium (4 taps) |
| | 10 bits | Full (8 taps) |
| 12 bits | 8 bits | Base 2x or Base 3x |
| | 8 bits | Medium (4 taps) |
| | 8 bits | Full (8 taps) |
| | 10 bits | Base 2x or Base 3x |
| | 10 bits | Medium (4 taps) |

| CMOS A/D Bits | CL Out Bits | CL output Format |
|---|---|---|
| | 10 bits | Full (8 taps) |
| | 12 bits | Base 2x or Base 3x |
| | 12 bits | Medium (4 taps) |

**NOTE** ✱ Camera Link Base and Medium support 8, 10, or 12-bit output whereas Camera Link Full only supports 8 or 10 bits per pixel.

A table below shows maximum frame rates of the Cheetah CLF-C4120C camera at full resolution with following settings:

- Master AOI size: 4112 (H) x 3008 (V)
- Horizontal and Vertical Offset: 0
- Horizontal and Vertical Binning: 1x
- Horizontal and Vertical Decimation: 1x
- Bit Shift: No Shift

| CMOS A/D Bits | CL Out Bits | CL output Format | Frame Rate (full resolution) |
|---|---|---|---|
| 8 bits | 8 bits | Base 2x or Base 3x | 11 |
| | 8 bits | Medium (4 taps) | 22 |
| | 8 bits | Full (8 taps) | 42 |
| 10 bits | 8 bits | Base 2x or Base 3x | 9 |
| | 8 bits | Medium (4 taps) | 18 |
| | 8 bits | Full (8 taps) | 34 |
| | 10 bits | Base 2x or Base 3x | 10 |
| | 10 bits | Medium (4 taps) | 18 |
| | 10 bits | Full (8 taps) | 34 |
| 12 bits | 8 bits | Base 2x or Base 3x | 8 |
| | 8 bits | Medium (4 taps) | 15 |
| | 8 bits | Full (8 taps) | 29 |
| | 10 bits | Base 2x or Base 3x | 8 |
| | 10 bits | Medium (4 taps) | 15 |
| | 10 bits | Full (8 taps) | 29 |
| | 12 bits | Base 2x or Base 3x | 7 |
| | 12 bits | Medium (4 taps) | 14 |

**TIP** ⓘ Camera Link cameras require a frame grabber device on the computer for capturing individual frames from the camera's video stream. Be sure to set the number of camera link taps in the frame grabber to match the number of camera link taps coming out of the camera.

## Image Correction

The camera provides image correction with preloaded defect maps and tables (static) and without preloaded defect maps or tables (dynamic).

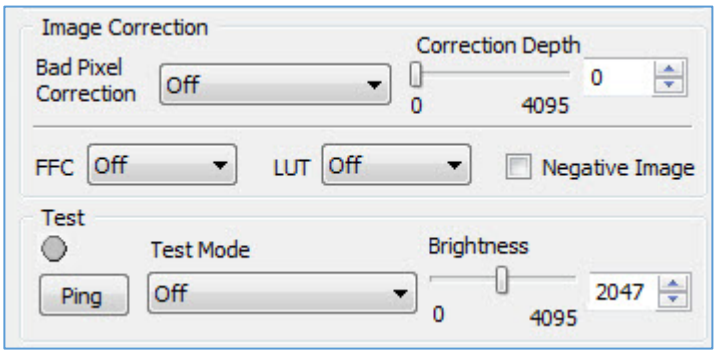


**Bad Pixel Correction** Enables static or dynamic pixel corrections. You can enable static and dynamic pixel correction independently or simultaneously. You can adjust the intensity threshold for the hot pixel corrections using the Threshold slider (0–4095).

- **Off:** disables Bad Pixel Correction.
- **Factory:** corrects bad pixels identified with predetermined and preloaded defective and hot pixel maps created by the factory.
- **Dynamic:** pixel correction works independently of defective or hot pixel maps. The camera determines which pixels need correction based on a threshold value you input and performs the correction automatically.
- **Dynamic&Factory:** Combines dynamic pixel correction and use of factory bad pixel maps.
- **User:** Corrects bad pixels identified by user-created correction maps.
- **Dynamic&User:** Combines dynamic pixel correction and use of user-created bad pixel maps.

**Correction Depth** For Dynamic Pixel Correction, you can set a threshold level from 0 to 4095 for 12-bit images. The camera will correct all hot pixels having an amplitude (hot pixel intensity minus average pixel intensity) higher than the threshold setting.

**FFC** Activates a flat field correction table created by the factory or user. The Flat Field Correction mechanism corrects for variation in illumination caused by the lens over the field of the array. You can turn FFC off or select from one of two FFC tables, FFC#1 and FFC#2. The Factory loads a default FFC table into FFC#1, but the user can upload custom FFC tables to both FFC#1 and FFC#2 using Imperx Upload Utility.

**LUT** Activates a Lookup Table for modifying and transforming the original video data into any arbitrary value. The camera supports four lookup tables. LUT#1 is pre-loaded with standard Gamma 0.45.

**Negative Image** Reverses the image (2's complement) so that the lightest areas appear darkest and the darkest areas appear lightest.

## Test

Use the test function on the Image Parameters panel to check camera communications and to generate test images.

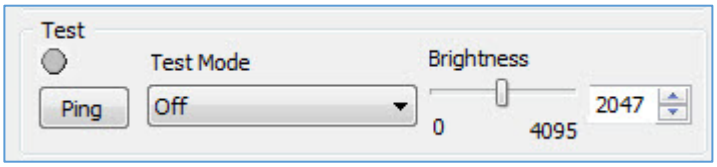


The Ping function checks the serial connection status of the camera. Click **Ping** for a visual indication of the following status indicators:

- Green (OK) indicates a successful connection.
- Red (ERR) indicates no connection.
- Yellow indicates a ping command was sent to the camera. IF no valid return is received, the indicators becomes gray.

The camera can output several test images to verify the camera's general performance and connectivity to the computer. This ensures that all the major modules in the hardware are working properly and the connection between your computer and camera is synchronized, that is, the image framing, output mode, communication rate, and so on are properly configured. Note that test image patterns do not exercise and verify the image sensor functionality.

Use the drop-down menu to display several test patterns.

| Test Mode | Descriptions |
|---|---|
| Off | Test mode is off. |
| BW Checkerboard | A black and white checkerboard pattern. |
| Gray Image | A uniformly dark gray image. User can set the value. |
| Tap Segmented | An image segmented by each tap output. |
| H Ramp | A stationary horizontal ramp image. |
| V Ramp | A stationary vertical ramp image. |
| H & V Ramp | A combined stationary horizontal and vertical ramp. |
| H & V Ramp Moving | A moving horizontal and vertical ramp image. |
| Vertical Bars | A set of 8 vertical gray bars with different gray levels. |
| Superimpose Crosshair | Superimposes crosshair watermark (2 pixels and 2 lines thickness) indicating the absolute center of the image. |

# Color

White balance lets you adjusts the camera's color setting to preserve the scene's original colors so white objects appear white. The screen displays the current (calculated) white balance coefficients for each color (red, green, blue). The Color screen is disabled for monochrome cameras.

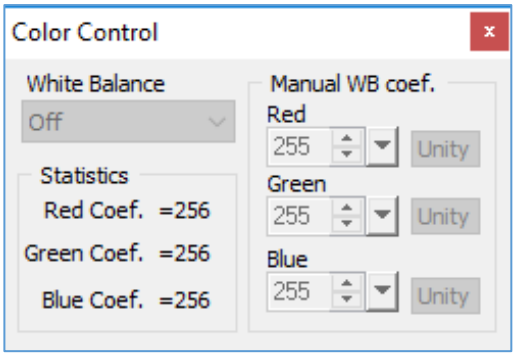


Use the White Balance drop-down menu to select a white balance preset:

| White Balance Presets | Descriptions |
|---|---|
| Off | No white balance performed. Raw Red, Green and Blue pixel data is output. |
| Once | The camera analyzes only one image frame, calculates only one set of color correction coefficients, and corrects all subsequent frames with this set of coefficients. |
| Auto | The camera analyzes each frame, derives a set of correction coefficients on each frame, and applies them to the next frame. |
| Manual | The camera uses the correction coefficients as entered from the user. |

Use Manual WB Coefficients to manually define white balance coefficients for each color (red, green, and blue). Coefficient values affect the intensity of each color and range from 0 to 4095. The Statistic area of the screen gives you the current (calculated) white balance coefficients per color.

**TIP** ⓘ

For best color accuracy and stability when the spectral source is constant, image a uniform grey target with the camera using the desired light source.

Select **Once** to find the correct R, G, and B coefficients and write down the values.

Then select **Manual** and load these coefficients into the camera. Leave Manual selected. The camera will now apply these coefficients to every frame captured. Save this configuration to one of the camera's user spaces.

# P-Iris Lens Control

If your camera has support for a P-Iris lens, the CamConfig GUI provides a P-Iris Control screen for manual control over the iris position. Depending on the lens type, the iris position and limits are shown in steps (Default lens type) or f-numbers (Kowa LM25JC5MM-IR, Xenoplan XNP 1,4/17, or Computar MG5020KC lenses).

P-Iris option is available for the Cheetah C1621, C1921, C2020, C2420, C2420Y/Z, C2820, C3220, C4020, C4120, C4510, C5310, and C5311 cameras.

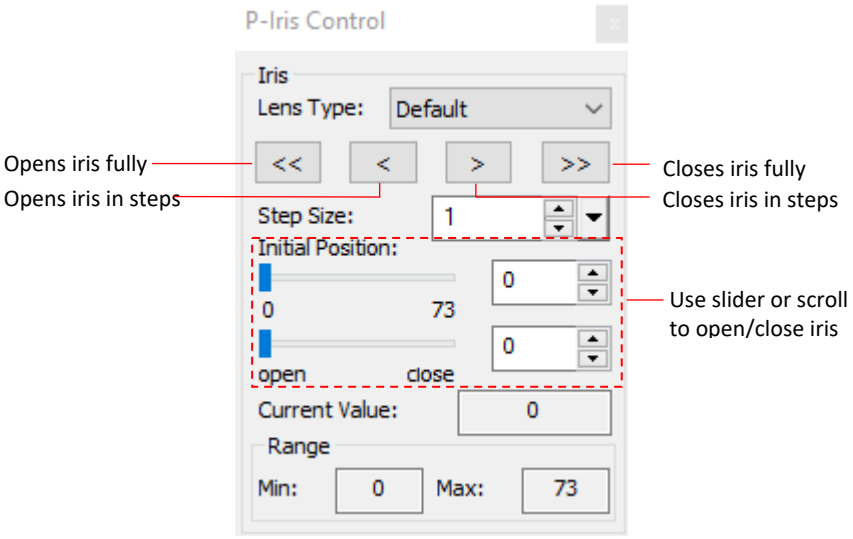


| Settings | Descriptions |
|---|---|
| Lens Type | Select the P-Iris lens on your camera from the drop-down.<br>The options are:<br>• Default<br>• Kowa (LM25JC5MM-IR)<br>• Xenoplan (XNP 1,4/17)<br>• Computar (MG5020KC) |
| Iris Open/Close<br><< >> | Use the iris buttons to fully open or fully close the iris. |
| Iris Step<br>< > | Use the iris step buttons or slider to finely adjust the iris open/close. |
| Step Size | Sets the iris step. |
| Current Value | Displays current iris position (in f-stops or steps). |
| Range | Shows register minimum/maximum values of iris. |

# Canon Lens Control

If using Canon EF lens control, you can control the lens iris and focus from the Lens Control screen. The screen also provides the current status of the lens control unit, encoder, iris, and iris range. Canon lens control is available for C4420, C5420, C6420, C4420-T, C5420-T, and C6420-T cameras.

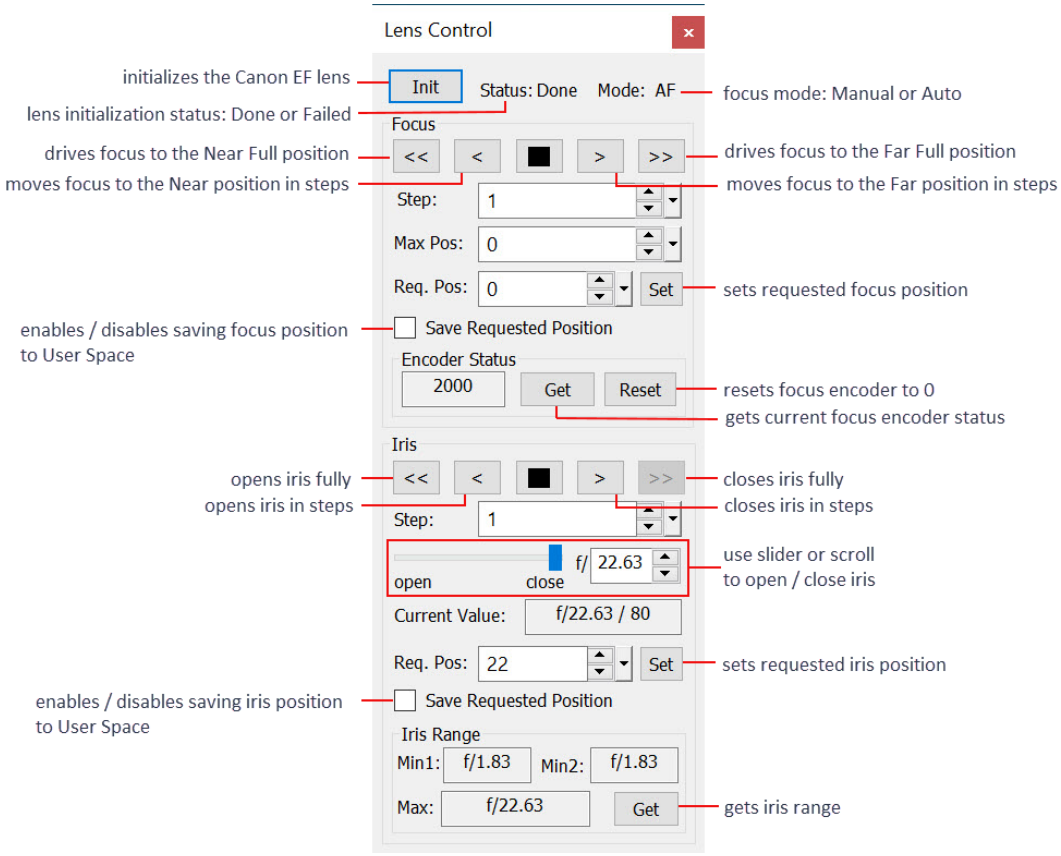


| Controls | Description |
|---|---|
| Init | Initializes the Canon EF lens. |
| Status | Indicates status of lens initialization, either Done or Failed. |
| Mode | Indicates mode of the lens focus, either Manual or Auto. |
| Focus | Controls for focusing the lens in real-time. |
| Step | Changes the focus position step granularity from fine (step 1) to coarse (step 255). A step value of 4 is recommended for fine focus. |
| Max Pos | Sets maximum focus encoder value. To set the maximum focus position, enter the value in the **Max Pos** field and press **Enter**. |
| Req. pos | Sets requested focus position. To set focus to a desired position, enter the value in **Req. Pos** field, press **Enter**, and click **Set**. |
| Save Requested Position | Enables/disables saving focus position to User Space. |

| Controls | Description |
|---|---|
| Encoder Status | Provides a relative measure of the lens focus position but does not provide sufficiently accurate location information to set lens focus after power cycling. Once the lens is focused, it will retain focus after repeated power cycling.<br>• Click **Get** to display the current location of the lens position.<br>• Click **Reset** to return status to zero value. |
| Iris | Controls for opening/closing iris |
| Req. Pos | Sets requested iris position in raw units. To set iris to a desired position, enter the value in **Req. Pos** field, press **Enter**, and click **Set.** |
| Save Requested Position | Enables/disables saving iris position to User Space |
| Iris Range | Shows register values of iris and current iris value. Click **Get** to ensure current iris range values. |

## Iris Control

A Canon EF EOS lens provides an iris range in raw encoder counts, and the camera reads out this iris range from a Canon lens upon issuing the CANON Get Aperture Range command (0x6234). Each time the iris is changed, the camera calculates and returns the Current F-Number using the following formula:

Current F-Number = Sqrt (2)^[(Raw unit/8) - 1]

For example, if Raw unit = 45, then Current F-Number = 4.97.

The CamConfig GUI specifies the iris position in raw encoder counts using the F-number/Raw counts format:

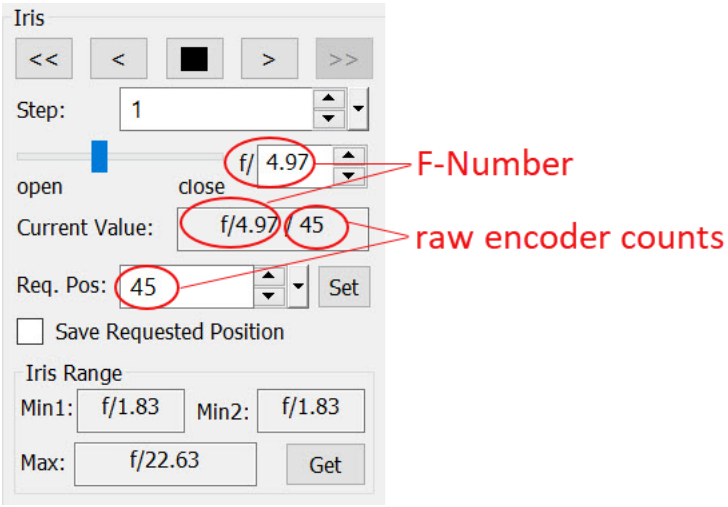


Using registers CANON IRIS Saved Position (0x0400) and Set IRIS Position (0x620C) you can set the iris to a required value. The aperture will be changed with IRIS Step Value (0x6200) until it is greater than or equal to the target position in raw units. For best precision to return the iris to a previous F-number, Imperx recommends using an IRIS Step Value of 1 or 2.

# Temperature Control

The CLF-C4420-T, CLF-C5420-T, and CLF-C6420-T cameras feature thermoelectric Peltier cooling module (TEC) that stabilizes the image sensor temperature over ambient temperature variations. The cameras are also equipped with built-in forced air-cooling. The Temperature Control screen lets you set the target image sensor temperature for auto-mode or disable/enable TEC manually.

**⚠CAUTION**

The image sensor is not protected from humidity in the environment. When using the TEC option, always monitor the environment's relative humidity and be sure that the image sensor temperature set point is always well above the 'dew point'.

If condensation forms on the image sensor, electrical shorting and corrosion can result potentially damaging the image sensor and/or camera electronics.

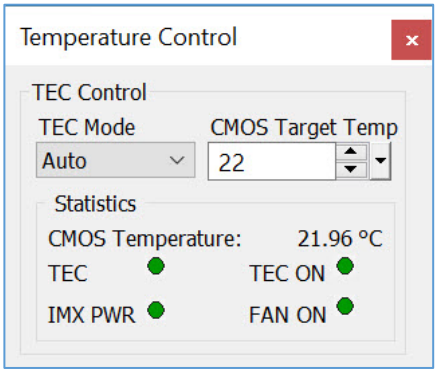


| Settings | Descriptions |
|---|---|
| TEC Mode | Sets the TEC to On, Off, or Auto<br><br>**On**: TEC module operates constantly at full power.<br><br>**Auto**: TEC module turns on when the sensor temperature is higher than CMOS Target Temperature. |
| CMOS Target Temp | Sets the temperature that turns on TEC module in Auto mode. The temperature range is from 10 °C to 40 °C. |
| Statistics | Provides live information about the current temperature of the image sensor and a status of the TEC module, fan, and image sensor power.<br><br>• **CMOS temperature** shows current temperature of the image sensor<br>• **TEC** indicator provides status of the TEC module power:<br>– the power consumption of the TEC module is within limits<br>– the power consumption of the TEC module has reached the minimum limit<br>– the power consumption of the TEC module power has reached the maximum limit |

| Settings | Descriptions |
|---|---|
| | • **TEC ON** indicator provides status of the TEC module:<br> – the TEC module is On<br> – the TEC module is Off<br>• **IMX PWR** indicator provides status of the image sensor power:<br> – the image sensor power is on<br> – the image sensor power is off<br>When the temperature of one of the camera's boards reaches 90 °C, the image sensor power turns off. The power restores once the temperatures of all boards decreased to 75 °C.<br>• **FAN ON** indicator provides status of the fan<br> – the fan is On<br>The fan turns on, if the temperature of a camera board reaches 35 °C. Once the temperatures of all boards has decreased to 30 °C, the fan turns off. The fan is enabled if TEC Mode is On or Auto. If TEC Mode is Off, the fan is disabled.<br> – the fan is Off |

The C4420-T, C5420-T, and C6420-T cameras maintain the sensor temperature at 20 °C when the ambient temperature is within the range from 18 °C to 34 °C.

# Camera Features

## Image Data Flow

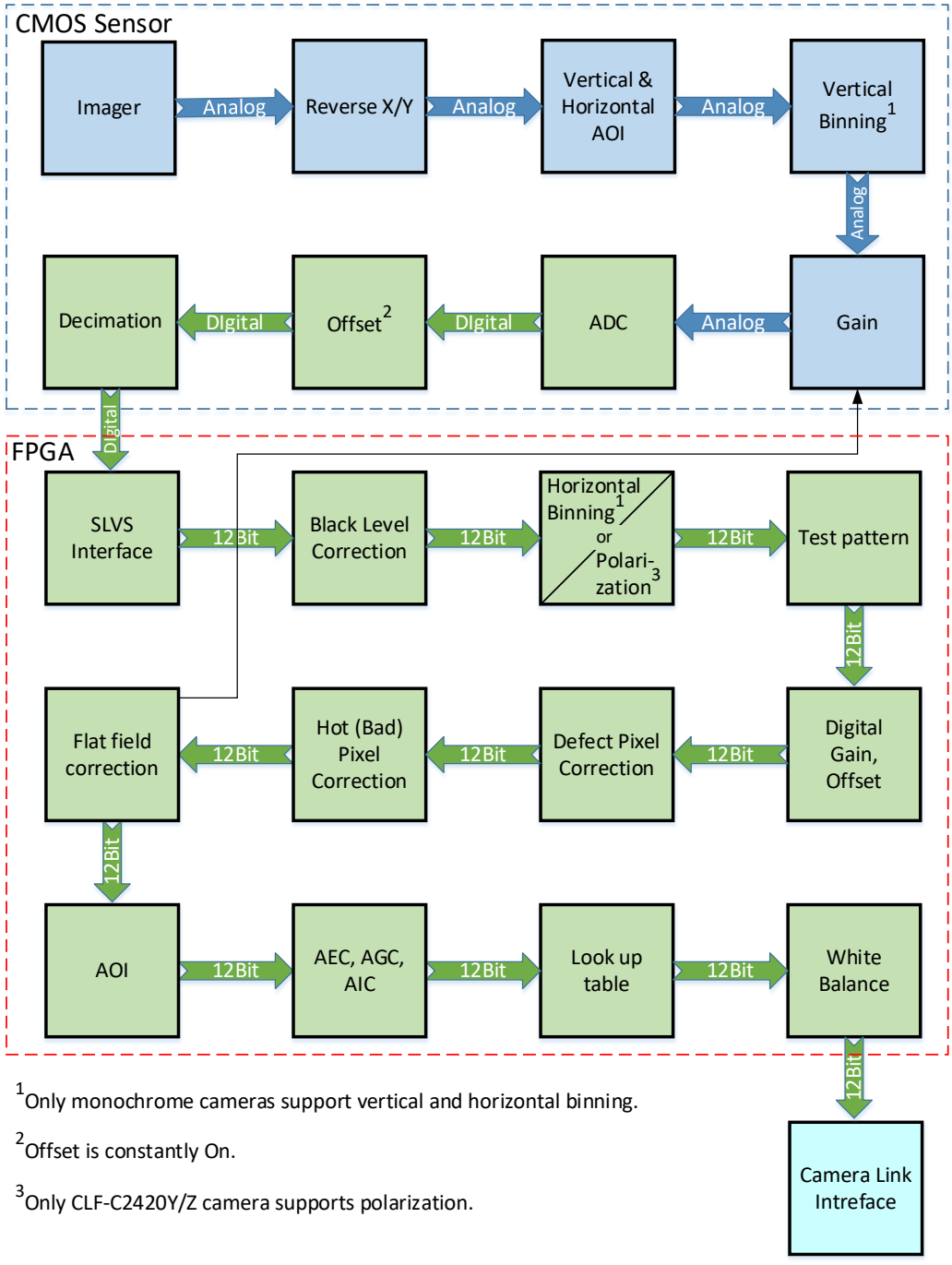


[1]Only monochrome cameras support vertical and horizontal binning.

[2]Offset is constantly On.

[3]Only CLF-C2420Y/Z camera supports polarization.

# Exposure Control

You can select one of the exposure control modes: **Off**, **Internal**, or **Pulse Width**.

When exposure control is **Off**, the frame readout time determines the exposure time.

In the **Internal** mode, you can control exposure time manually or automatically. To enable manual control, clear the *AEC Enable* check box and specify the exposure time using *Exposure Time* setting.

To enable AEC (Automatic Exposure Control), check the *AEC Enable* check box.

As the camera works either in free-running (untriggered) or triggered (Standard or Fast Trigger) mode, you might need to adjust trigger parameters when setting exposure (refer to the section Camera Triggering).

**NOTE** ⊛ The AEC is not available when exposure mode is set to **Pulse Width**.

## Exposure Control in Free-Running Mode

In **free-running mode**, the camera constantly reads out the sensor, and the exposure time is determined by the frame readout time. The exposure time equals the frame read out time when the exposure mode is set to **Off**.

**Free-running mode, Exposure control is Off**

**Settings:**
Exposure Mode: **Off**
Acquisition Mode: **Free running**

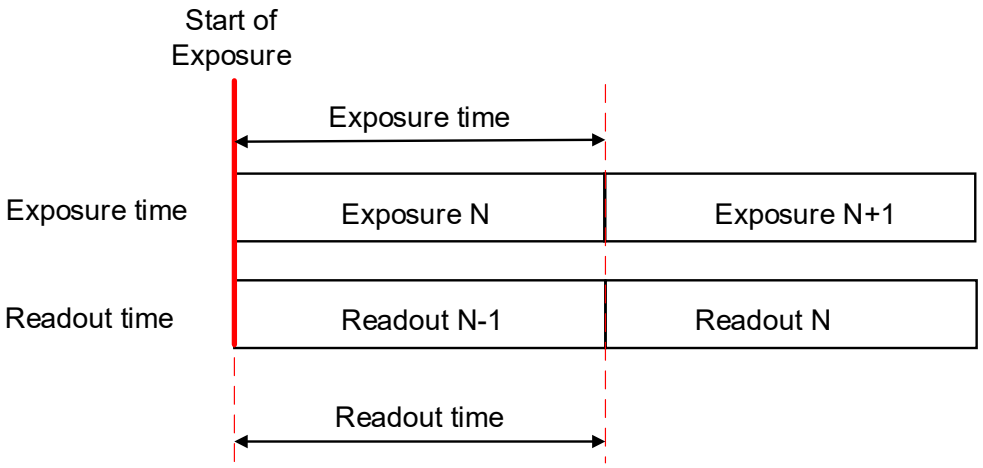

To reduce the image exposure time under bright lighting conditions, set *Exposure Mode* to **Internal**. The electronic exposure control does not affect the frame rate; it only changes the exposure time. When the **Internal** mode is active, the camera controls the start of exposure, so the new exposure ends just as the readout of the current frame ends and the readout of the next frame begins.

**Free-running mode, Exposure control is Internal**

**Settings:**
Exposure Mode: **Internal**
Acquisition Mode: **Free running**
Exposure Time: **User-specified** (Min. is camera dependent; Max = Readout time)

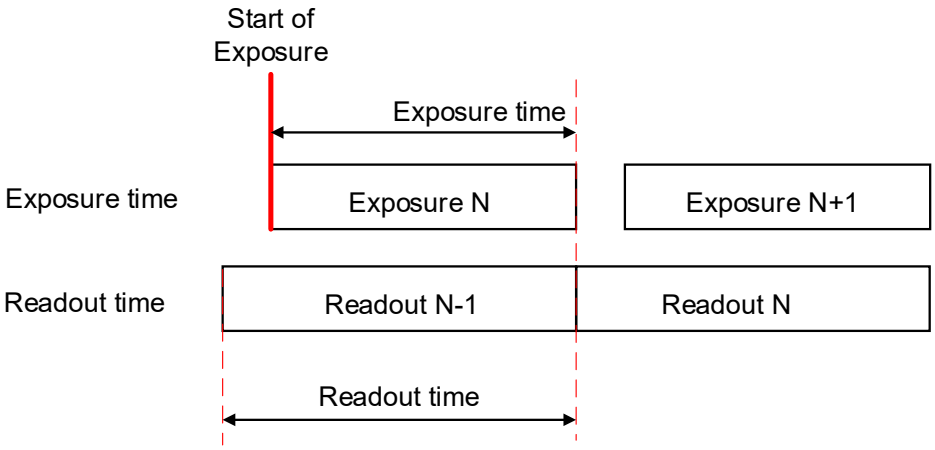


**NOTE** ⊛ In free-running mode, the maximum exposure time equals frame time. The minimum exposure depends on camera model:
10 µs for C1621,
5 µs for C1921 and C3220;
14 µs for C2020, C2420, C4020, and C4120;
30 µs for C4420, C4510, C5310, C5311, C5420, and C6420 cameras.

## Exposure Control in Triggered Mode

In **Triggered mode**, you can synchronize the exposure start and duration to an external signal. Two exposure control options are available: **Internal** or **Pulse Width**. Triggered mode can be set to either Standard or Fast (see the Camera Triggering section).

**NOTE** ⊛ The electronic exposure control does not affect the camera's frame rate in Fast trigger mode, because the exposure and readout operations are overlapped in time.

In Standard Trigger mode, the maximum frame rate depends upon the exposure time, because the exposure and readout occur sequentially (not overlapped).

In the **Internal** exposure control mode, the external trigger signal controls the start of exposure. The exposure duration can be controlled manually or automatically (AEC).

In the **Pulse Width** mode, the external trigger signal controls the start and duration of exposure.

## Setting Exposure in Trigger Mode

1. Turn off the camera image acquisition.
2. For manual exposure control, clear the *AEC Enable* check box. For automatic exposure control, check the *AEC Enable* check box (AEC is not available in Pulse Width mode).
3. In the Gain and Exposure menu, set *Exposure Mode* to **Internal** (or **Pulse Width**).

   If AEC is disabled, enter *Exposure Time* (in µs).
4. In the Trigger Control menu, set Acquisition mode to **Triggered**.
5. Configure the trigger parameters.

   Please refer to the section Configuring the Trigger, steps 3–6.

## Global Shutter

In global shutter mode, all pixels in the array reset at the same time, then collect signal during the exposure time, and finally transfer the image to a pixel memory region within each pixel. After transferring the image to the pixel memory region, the readout of the array begins. In this way, all pixels capture the image during the same period, which reduces any image artifacts due to motion within the scene. The maximum exposure is frame-time dependent, and the minimum exposure varies based on the image sensor.

The camera overlaps the exposure and read-out times in free-running and Fast Trigger modes as shown in the following figure.

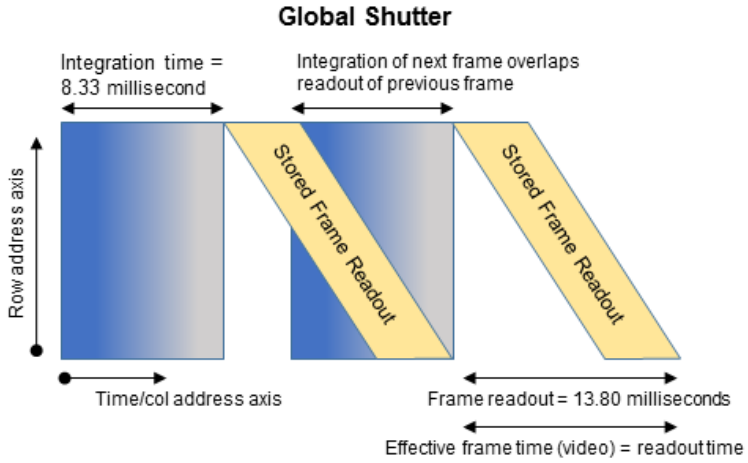

# Automatic Exposure Control

You can set the camera to AEC (automatic exposure control) to keep the same image brightness during changing light conditions. You can enable both AEC and automatic gain control (AGC) independently or together.

In AEC mode, you can set the image luminance (brightness) target, and the camera adjusts the exposure accordingly. The slave Area of Interest (SAOI) supports a mode where the camera adjusts the exposure to maintain the target luminance calculated only within the AOI.

The luminance target is a 12-bit value. To determine the luminance target when using 8-bits per pixel, take the desired output in ADUs and multiply this value by 16. You can select the target luminance to be either the average luminance or peak luminance within the image or within the AOI.

The camera adjusts the exposure starting within the preset limit established by the user-specified minimum/maximum limits. When AEC and AGC are enabled, exposure is always varied first until the exposure reaches the maximum limit. The camera then indicates the limit has been reached and begins increasing the gain until either the luminance target is achieved, or the maximum gain limit is reached.

You can preset the speed of convergence (how fast the camera stabilizes after an illumination change) from four possible rates. Slower convergence rates are more stable than faster convergence rates, if the illumination levels change quickly over a wide intensity range. The camera displays the current luminance, current exposure, and current gain. For auto gain control, refer to Automatic Gain Control (AGC) section.

**⚠CAUTION**

In some rapidly changing and bright light conditions, an image brightness oscillation (image intensity flipping from bright to dark) could occur. To prevent this, increase the AEC minimum exposure settings, decrease the convergence speed, or change the AOI or the lens iris.

# Automatic Gain Control

Automatic gain control (AGC) enables the camera to maintain the same image brightness during changing light conditions. In AGC mode, you can set the image luminance (brightness), and the camera will adjust the gain accordingly. Luminance options are average or peak.

The camera starts by changing the gain within the specified min-max limits.

- If reaching one of the gain limits, the camera indicates the limit has been reached and maintains this value until the light condition change. You can set the speed of convergence from four possible options.
- If enabling AEC mode and AGC mode together, the camera starts by changing the exposure first within the specified min-max limits until the maximum exposure limit is reached.
- Upon reaching the maximum exposure limit, the camera adds gain and changes it within the specified min-max limits.

The AEC/AGC algorithm samples all pixels for the entire frame, but you can select only a portion of the image (AOI) to calculate the luminance level using the slave AOI mode. The camera displays the current luminance within the frame (or AOI, if selected), the current exposure, and the current gain.

# Input / Output Control

The camera supports one TTL output and one opto-isolated output. The camera also supports one TTL compatible and one opto-isolated trigger input.

You can map an external trigger signal to either Input 1 or Input 2 by setting **Trigger in** parameter to External 1 or External 2 respectively. Also, you can select what edge (rising or falling) will be used for triggering.

The inputs have debounce and filter options to prevent false triggering. The **Glitch filter** option defines the input trigger signals minimum pulse width. By setting the Glitch filter setting to a value slightly less than the input signal's pulse width, the camera will reject any noise with pulse widths less than the Glitch filter setting.

The debounce option defines the time period following a triggering event in which no additional triggers will be accepted by the camera.

You can map up to fifteen signals to either Output 1 or Output 2. For each mapped signal, you can select active High or active Low.

# Camera Triggering

Set the *Acquisition Mode* setting to **Triggered** to synchronize the camera to an external event and acquire an image at a specific time. A trigger pulse is issued when the external event occurs. The camera then receives the trigger and acquires the images.

The camera supports Standard and Fast Trigger modes.

## Standard Trigger Mode

In **Standard trigger mode**, the camera first performs the exposure (using the internal timer or external pulse width) and then reads out the image. The minimum trigger period is equal to the maximum exposure time plus the camera readout time.

You can set the number of frames to acquire for each trigger using *Frames per trigger* setting. By default, *Frames per trigger* is equal to 1 frame. The maximum number of frames is 16777215.

**NOTE** ⊛ The *Frames per trigger* setting is available in Standard trigger mode only.

An external timing pulse controls the start of the exposure if *Exposure Mode* is set to Internal.

**Standard trigger mode, Exposure Mode is Timed**

**CamConfig Controls:**
Acquisition Mode: **Triggered**
Trigger in: **External 1** (or External 2, Pulse Generator, Computer, Software)
Mode: **Standard**
Edge: **Rising** (or Falling)
Overlap: **Ignore** (or Accept)
De-bounce, Glitch filter, Exp. Delay: – **set if applicable**.
Frames per trigger: **1** (default), max is 16777215
Exposure Mode: **Internal**
For manual exposure control:
Exposure Time: **User-specified** (Min. – camera-dependent ; Max = Readout time)
AEC Enable: **Disabled**
For automatic exposure control (AEC):
AEC Enable: **Enabled**

**Parameters of the external trigger pulse**
Trigger width: ≥ 10 µs
Trigger period (min) = Exposure time (max) + Readout time

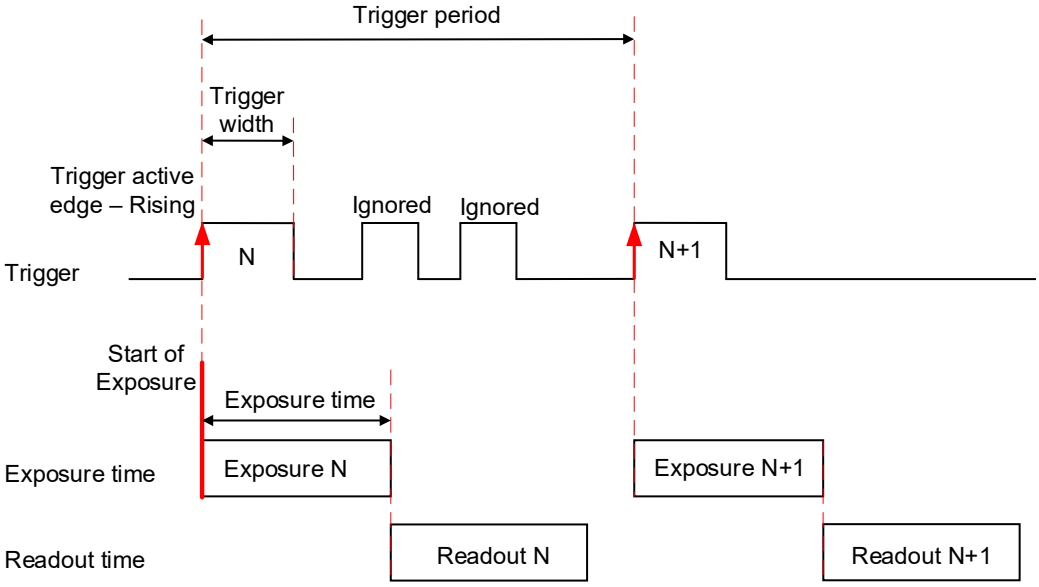

Setting *Exposure Mode* to **Pulse Width** allows the external timing pulse to control the exposure duration.

**Standard trigger mode, Exposure Mode is Pulse Width**

**CamConfig Controls:**
Acquisition Mode: **Triggered**
Trigger in: **External 1** (or External 2, Pulse Generator)
Mode: **Standard**
Edge: **Rising** (or Falling)
Overlap: **Ignore** (or Accept)
De-bounce, Glitch filter, Exp. Delay: **set if applicable**
Frames per trigger: **1** (default), max is 16777215
Exposure Mode: **Pulse Width**

**Parameters of the external trigger pulse**
Trigger width: ≥ 10 µs
Trigger period (min) = Exposure time (max) + Readout time

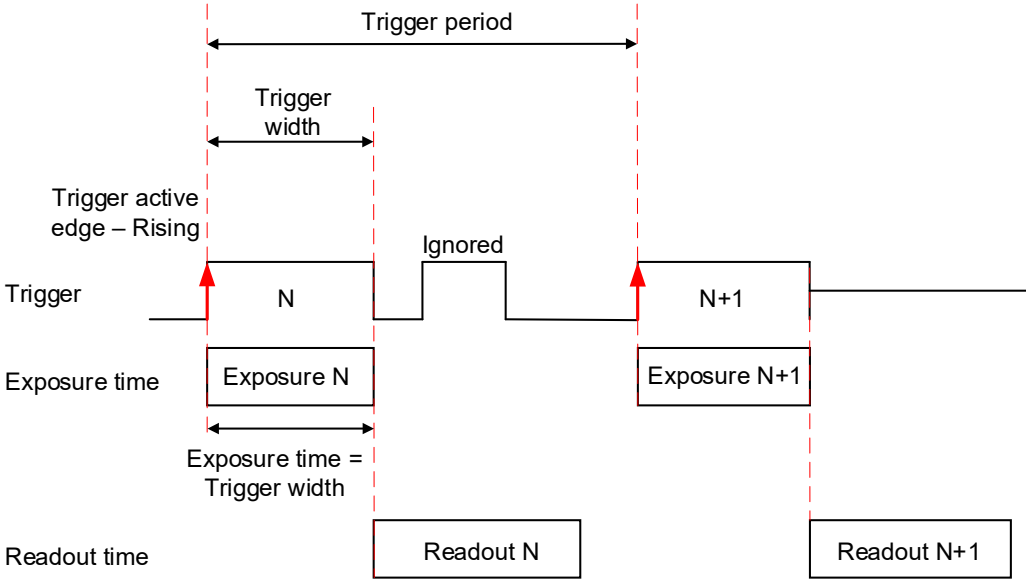

# Fast Trigger Mode

In **Fast trigger mode**, the exposure period and readout period are overlapped in a way that is similar to free-running (untriggered mode). Fast trigger mode depends upon a constant and stable trigger source so the camera can position the exposure period to conclude just as the previous frame readout ends. If the trigger period varies, the exposure will vary with the trigger period and uneven image illumination or wavering image brightness will result.

An external timing pulse controls the start of the exposure when *Exposure Mode* is Internal. The new exposure ends just as the readout of the current frame ends. The readout of the next frame begins with the next trigger. If the next trigger pulse appears during the previous trigger period, the camera ignores it.

**Fast trigger mode, Exposure Mode is Timed**

**CamConfig Controls:**
Acquisition Mode: **Triggered**
Trigger in: **External 1** (or External 2, Pulse Generator, Computer)
Mode: **Fast**
Edge: **Falling**
Overlap: **Ignore**
De-bounce, Glitch filter, Exp. Delay: **set if applicable**
Exposure Mode: **Internal**
Exposure Time: **User-specified** (Min.: camera-dependent; Max=16 s)

Parameters of the external trigger pulse:
Trigger width: ≥ 10 µs
Trigger period (min) = Readout time

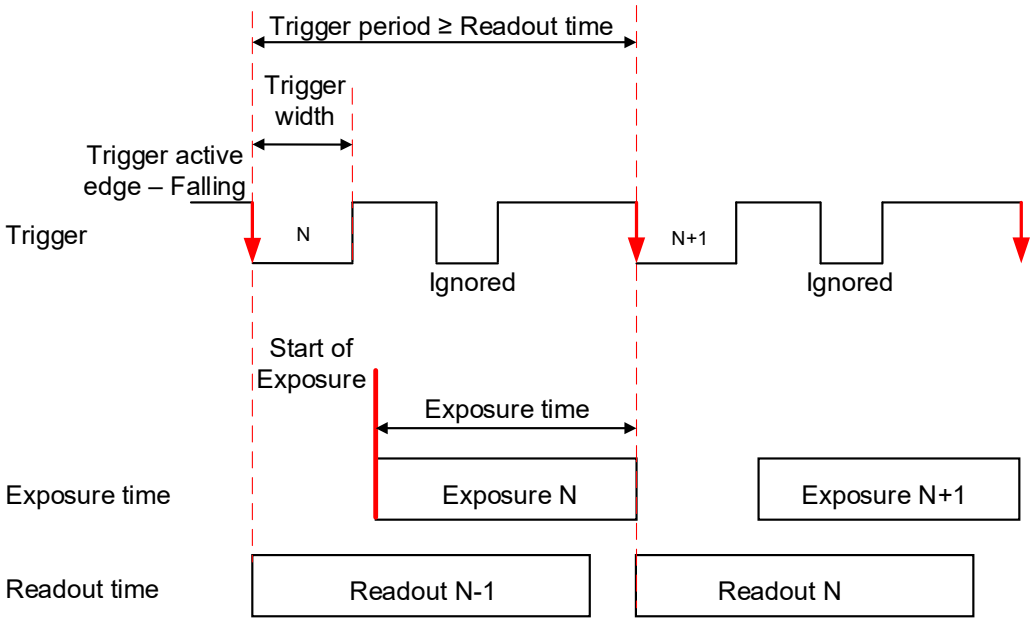

You can adjust the exposure duration to be equal to the external pulse width by setting the *Exposure Mode* to **Pulse Width**. The new exposure begins with the next trigger pulse during the readout of the current frame.

**Fast trigger mode, Exposure Mode is Pulse Width**

**CamConfig Controls:**
Acquisition Mode: **Triggered**
Trigger in: **External 1** (or External 2, Pulse Generator)
Mode: **Fast**
Edge: **Falling**
Overlap: **Ignore**
De-bounce, Glitch filter, Exp. Delay: **set if applicable**
Exposure Mode: **Pulse Width**

**Parameters of the external trigger pulse**
Trigger width: ≥ 10 μs
Trigger period: ≥ Readout time

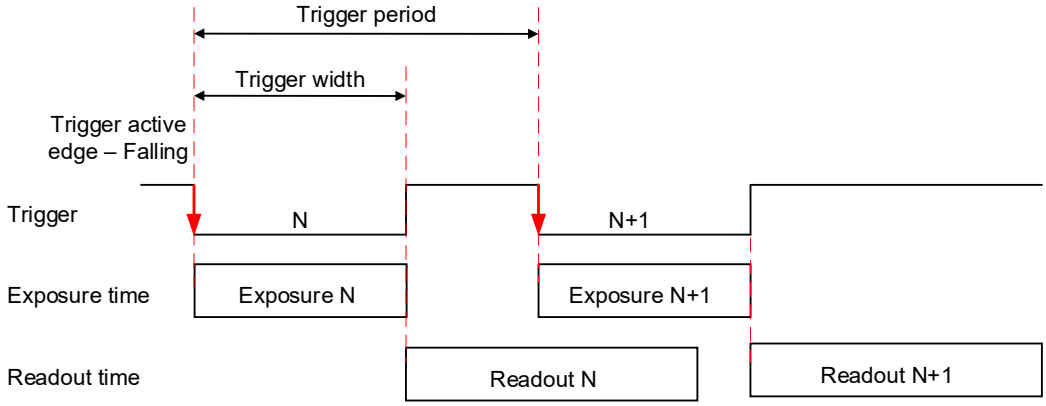


## Trigger Sources

In the normal mode of operation, the camera is free running, which means the camera continually reads out the sensor. If using a trigger to initiate readout, trigger mode enables synchronizing the camera to a timing pulse.

The camera offers five sources for triggering: External 1 or External2, internal (pulse generator), software, and Computer. You can map the trigger signal to a corresponding camera input.

- **External 1** – hardware Input Line GP Input1 (Trigger 1) is used as external source for the trigger signal.
- **External 2** – hardware Input Line GP Input2 (Trigger 2) is used as external source for the trigger signal.
- **Pulse Generator** – trigger source is generated by camera's internal Pulse Generator.
- **Software** – the camera expects a computer to send a command to the camera for generating one short trigger pulse. You can trigger the camera by clicking the GUI Software Trigger button or by sending the Trigger Software command. This can be useful in a debugging operation.
- **Computer** – The camera expects a signal coming from CC1.

## Configuring the Trigger

To configure the camera to work in trigger mode, follow the steps below:

1. Turn off the camera image acquisition.
2. On the Trigger Control screen, set *Acquisition Mode* to **Triggered**.
3. Set *Mode* to either Fast or Standard.
4. Select a trigger source under the *Trigger in* setting*:*
   - If a trigger source is either External 1 (Input1) or External 2 (Input2), configure the external trigger signal source.
   - If a trigger source is Pulse Generator, configure the camera's internal pulse generator.
   - If a trigger source is Software, you do not need to configure a signal source.
     The camera generates one short trigger pulse when you click the GUI Software Trigger button or send the Trigger Software command.
5. For the Fast trigger mode, set *Edge* to **Falling**.
6. For the Standard trigger mode, set Edge to either **Rising** or **Falling**.

> **NOTE** ⊛
>
> If *Edge* is Rising and *Exposure Mode* is set to Pulse Width, the exposure duration will be the time the trigger stays high.
>
> If *Edge* is Falling and *Exposure Mode* is set to Pulse Width, the exposure time will last as long as the trigger stays low.

7. Set trigger *Overlap* to either Ignore or Accept.
   **Ignore:** Camera ignores the next trigger and continues its present operation.
   **Accept:** Camera uses the next trigger. The camera stops the present operation, then reset and start the new trigger cycle
8. If applicable, set the number of frames to acquire for each trigger using *Frames per trigger* setting.
9. If applicable, set *De-bounce*, *Glitch filter*, and *Exp. Delay* to desired values. The *De-bounce* and *Glitch filter* features are used to prevent false triggering when a trigger signal is being generated by an external source mapped to the camera's Input 1 or Input 2.

| | |
|---|---|
| *Glitch filter* | Defines the input trigger signals minimum pulse width. By setting the *Glitch filter* to a value slightly less than the input signal's pulse width, the camera will reject any noise with pulse widths less than the *Glitch filter* value. |
| *De-bounce* | Defines the time period following a triggering event in which no additional triggers will be accepted by the camera. The camera ignores any pulses during the *De-bounce* time after receiving the trigger signal. |
| *Exp. Delay* | Defines the time between the beginning of the trigger pulse and the beginning of the exposure. The camera captures an image with some delay after the trigger event. |

Trigger pulse width: ≥ 10 µs
*Glitch filter time*: Recommended value ≤ 75% of the Trigger pulse width
Max.*Glitch filter time* = 65535 µs
Max. *De-bounce time* = 65535 µs
Max. *Exposure Delay* = 16777215 µs

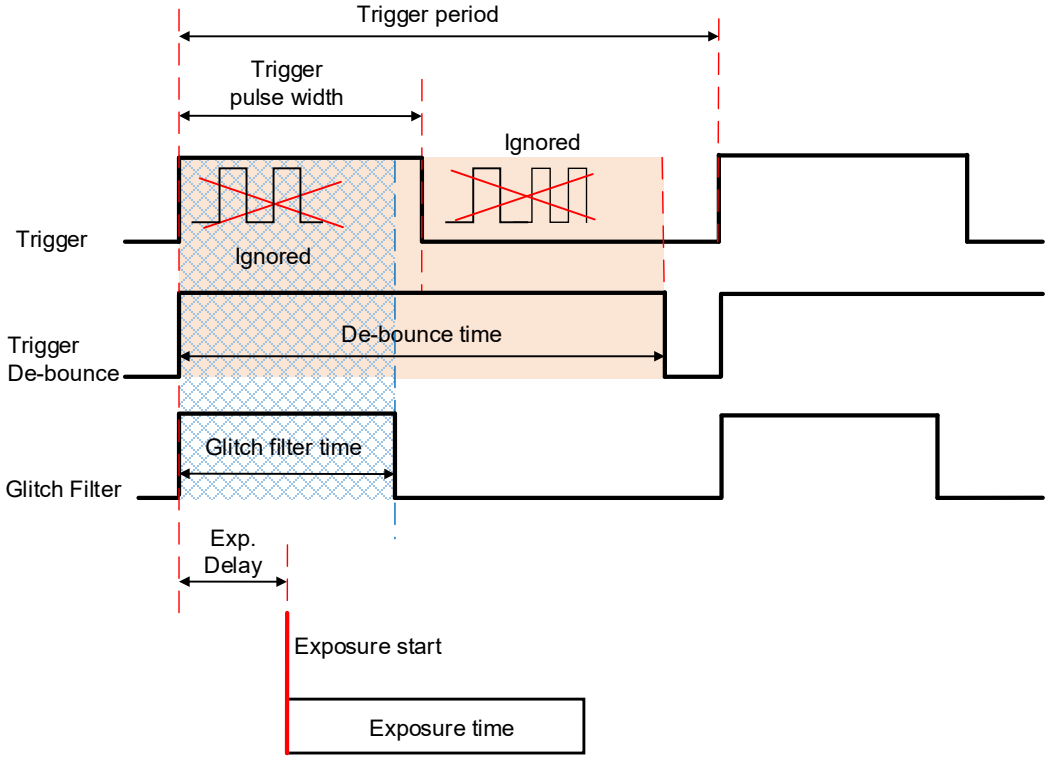

# Strobe and Synchronization Controls

The camera allows you to synchronize your system from several references. You can synchronize with the trigger input, the start, middle or end of exposure, or the start of image readout.

The Trigger Strobe feature creates a strobe output signal from the trigger input signal. The strobe can be delayed with respect to trigger using the Trigger Strobe delay feature (see Trigger Strobe Options).

**Strobe Positioned with Respect to the Trigger Pulse**
**Standard Trigger Mode**

**CamConfig Controls**
**Trigger Control**
Acquisition Mode: **Triggered**
Trigger in: **External 1** (or External 2, Pulse Generator, Software, Computer)
Mode: **Standard** (or Fast)
Edge: **Rising** (or Falling)
Overlap: **Ignore** (or Accept)
Frames per trigger: **1** (default), max is 16777215
De-bounce, Glitch filter, Exp. Delay: **set if applicable**

Trigger Strobe Options:
Mode: **Strobe 1** (or Strobe 2, or Both)
Delay: **User-specified** (from 0 to 16777215 µs)

**Output Control**
Out1: **Strobe#1, High**
Strobe 1
Mode: **Each Frame** (or Odd Frames, or Even Frames)
Position: **User-specified** (in µs)
Duration: **User-specified** (in µs)

Exposure Mode: **Internal**

**Parameters of the strobe signal**
Strobe period = Trigger period

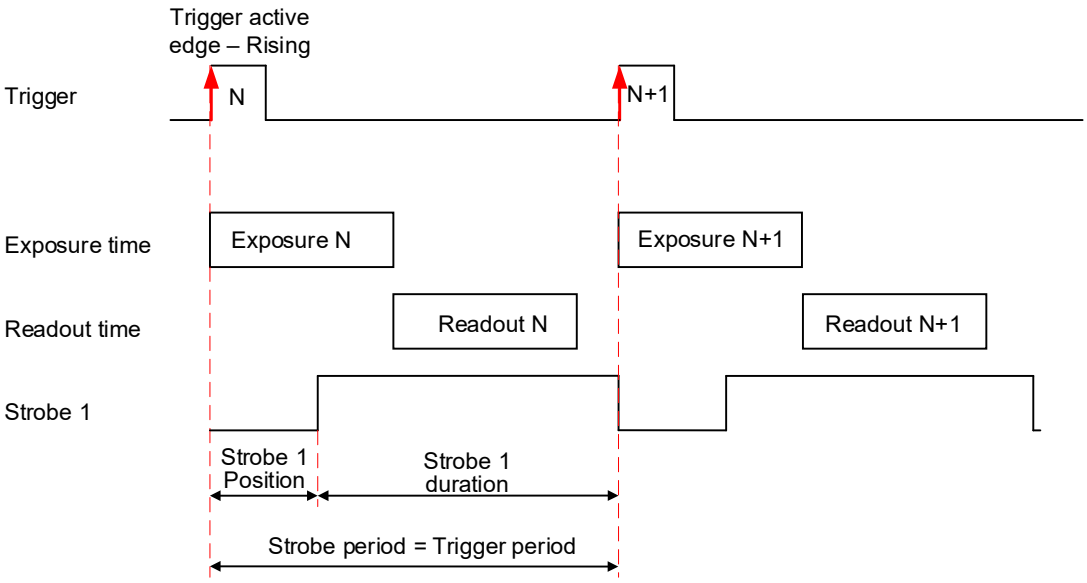

The camera provides signals indicating the start of exposure, mid-exposure, and end of exposure. These signals have a fixed duration of 2 microseconds These signals can be delayed using the Exposure Delay feature in the Trigger Control menu to also synchronize multiple cameras or light sources. If a longer pulse period is required, the strobe feature can be used.

The camera also provides strobes that activate just as the readout period begins and can be activated on all frames or just even or odd frames. If using internal exposure control, you can position the strobe to occur when the exposure time starts by using the Strobe Position feature. You can position each strobe pulse within the entire frame-timing period with a precision of 1.0 microsecond. You can set the strobe position and duration from 1.0 microsecond to the maximum strobe duration of 65,535 microseconds.

**Strobe Positioned with Respect to the Start of Exposure**
**Standard Trigger Mode**

**CamConfig Controls**
**Trigger Control**
Acquisition Mode: **Triggered**
Trigger in: **External 1** (or External 2, Pulse Generator, Software, Computer)
Mode: **Standard** (or Fast)
Edge: **Rising** (or Falling)
Overlap: **Ignore** (or Accept)
Frames per trigger: **1** (default), max is 16777215
De-bounce, Glitch filter, Exp. Delay: **set if applicable**

Trigger Strobe Options:
Mode: **Strobe 1** (or Strobe 2, or Both)
Delay: **User-specified** (from 0 to 16777215 µs)

**Output Control**
Out1: **Strobe#1, High**
Strobe 1
Mode: **Each Frame** (or Odd Frames, or Even Frames)
Position: **User-specified** (in µs)
Duration: **User-specified** (in µs)

Exposure Mode: **Internal**

**Parameters of the strobe signal**
Strobe period = Trigger period

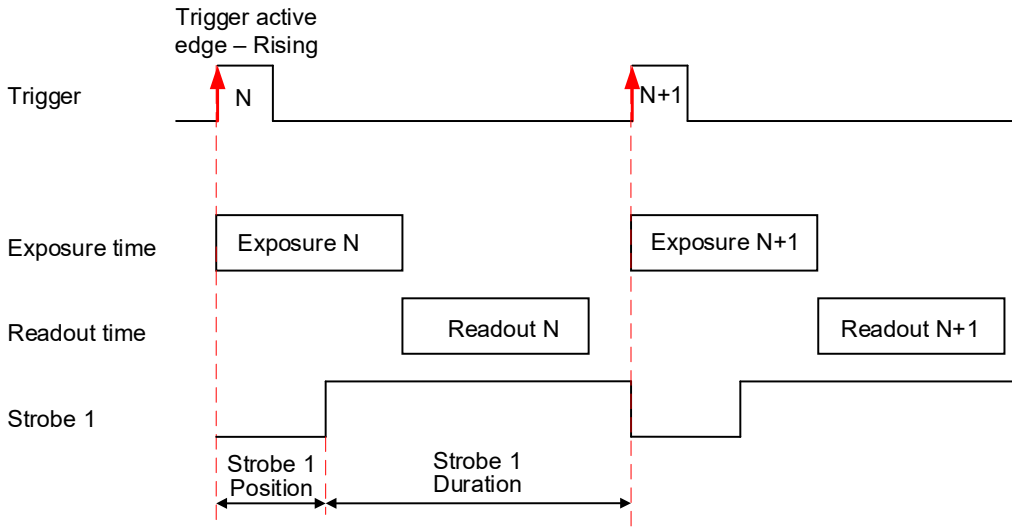


# Area of Interest

For some applications, you might not need the entire image, but only a portion of it. To accommodate this requirement, the Cheetah camera allows you to create one Region of Interest (ROI), also known as an Area of Interest (AOI).

## Horizontal and Vertical Window

Set the starting and ending point for each AOI independently in the horizontal direction (Horizontal Window) and the vertical direction (Vertical Window) by setting the window (H & V) offset and (H & V) size. The horizontal and vertical dimensions and offsets are limited to multiples of 4 pixels. In normal operation, the AOI defines the number of columns and rows output. The maximum horizontal window size (H) and the vertical window size (V) are determined by the camera's image full resolution.

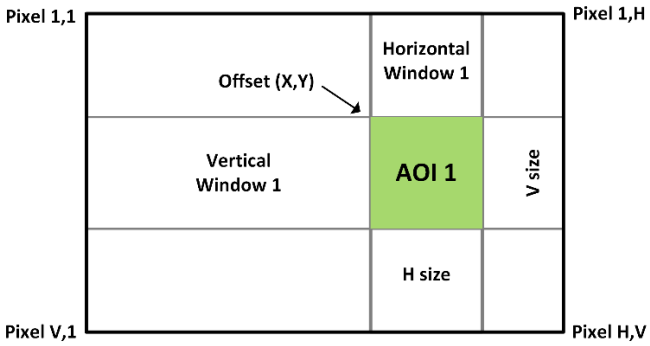


**NOTE** ⊛ For color version with AOI enabled, use an even number for Offset X and Offset Y to achieve proper color reconstruction and white balance.

## Factors Impacting Frame Rate

The camera frame rate depends upon a number of variables including the exposure time, number of rows and columns in the AOI, and the bandwidth of the output interface.

**AOI size:** Camera frame rate increases by decreasing either the number of columns or number of rows read out. Changing the number of rows read out causes the largest change in frame rate.

**Exposure Time:** In free-running or Fast trigger mode, the camera overlaps the exposure time and image readout so frame rate has no dependence on exposure time. In Standard trigger mode, however, the exposure and readout time do not overlap, and long exposure times will decrease frame rate.

**Decimation** – The camera supports both subsampling and pixel averaging to reduce the output resolution. Pixel averaging and subsampling increase the sensor frame rate. However, subsampling decimation offers the largest frame rate improvement by reducing the number of rows and columns read out from the image sensor. Sub-sampling and pixel averaging decimation provide about a 2x to 3x increase in frame rate.

**Output Interface Bandwidth** – The bandwidth of the output interface can also impact the maximum achievable frame rate. For example, with Camera Link Base (2 taps selected) and with 10-bit digitization and 10-bit output mode selected, the frame rate is limited by the output interface bandwidth of 2.04 Gbps.

## Slave AOI

A Slave AOI (SAOI) used to apply a look-up table (LUT) to a selected region of the image or to calculate white balance coefficients from a selected region within the image. The selected region can be within the SAOI or outside the SAOI (Exclude option). Alternatively, the SAOI can be used to further refine the camera output so that only the pixels within the SAOI are output or only pixels within the ROI, but outside the SAOI (Exclude option) are displayed. When SAOI is enabled with AEC/AGC, the auto gain and auto exposure corrections will use luminance values calculated from inside or outside the selected AOI and then apply the determined exposure and gain settings to the full image.

| Test pattern | Description |
|---|---|
| Off | Slave AOI disabled. |
| Include | Only pixels within the Slave AOI are included to the image, all pixels outside Slave AOI are excluded. |
| Exclude | Slave AOI are excluded from the image, all pixels outside the Slave AOI are included. |
| AGC/AEC ROI Include | Pixels within the Slave AOI are used by Auto Gain Control (AGC) and/or Auto Exposure Control (AEC) to calculate the Luminance statistics. |
| AGC/AEC ROI Exclude | All pixels outside the Slave AOI are used for Auto Gain Control (AGC) and/or Auto Exposure Control (AEC) features to calculate the Luminance statistics. |
| AWB ROI Include | Pixels within the Slave AOI are used by the Auto White Balance (AWB) feature to calculate WB coefficients. |
| AWB ROI Exclude | All pixels outside the Slave AOI are used by the Auto White Balance (AWB) feature to calculate WB coefficients. |
| LUT ROI Include | The LUT is applied to pixels within the Slave AOI only. |
| LUT ROI Exclude | The LUT is applied only to pixels outside the Slave AOI. |

# Binning and Sub-Sampling Decimation

## Binning

The principal objective of the binning function is to reduce the image resolution with better final image quality than a subsampling function. Binning reduces the output resolution by summarizing several pixels together and has the advantage of reducing aliasing, increasing signal-to-noise ratio (SNR). Subsampling — as opposed to binning — has the advantage of increasing the output frame rate by reducing the number of rows read out, but also can introduce aliasing in the final image. Subsampling, however, increases the output frame rate more than binning.

The following graphic illustrates the concept of 4:1 binning for a monochrome image sensor. The values of pixels P1, P2, P3 and P4 are summed together resulting in a single larger pixel output value.
The binning feature can be used on the full resolution image or within any area of interest.

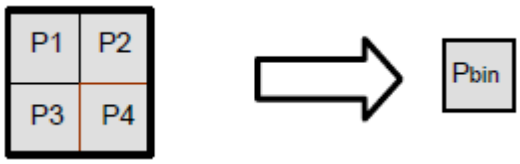


**NOTE** ⊛ Color cameras do not support binning.

CLF-C1621 and CLF-C2420Y/Z cameras do not support binning or sub-sampling decimation.

## Sub-Sampling Decimation

Sub-sampling reduces the number of pixels output by reducing the output frame size but maintains the full field of view. If an area of interest (AOI) is selected, then the field of view of the AOI is maintained.

The cameras employ a “keep one pixel, skip one pixel” sequence. When enabled in both x and y, every other pixel within a line is retained, and every other line within the image is retained.

**Monochrome sub-sampling:**

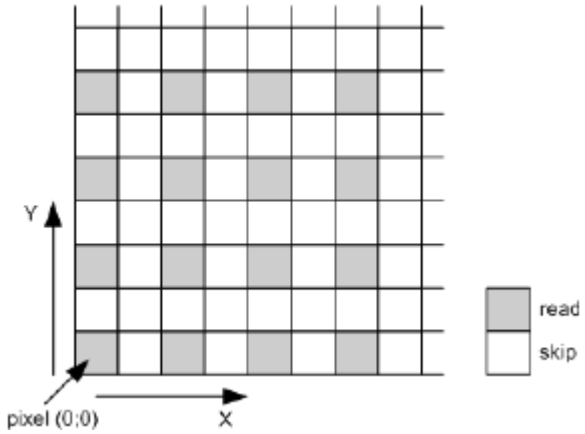


**Color sub-sampling:**

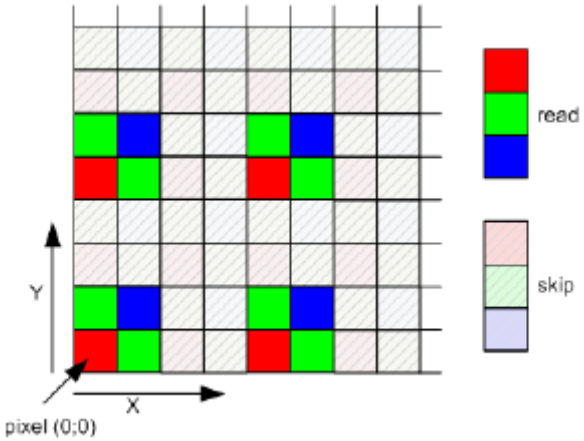


The first pixel read out is red in Sony Pregius CMOS color sensors. However, in Gen 4 Sony Pregius S color sensors (used in CLF-C4510C, CLF-C5310C, and CLF-C5311C cameras), the first pixel read out is green when sub-sampling is enabled. To keep the same color structure and compensate for the wrong starting color, two lines are automatically skipped after the sub-sampling has been enabled (one line – at the top, one line – at the bottom of the sensor).

The vertical resolution of the color camera with Gen 4 Sony Pregius S sensors when vertical sub-sampling is enabled:

$$\frac{Full\ Resolution}{2} - 2\ lines$$

# Data Output Format

## Bit Depth

The image sensor provides 8-, 10-, and 12-bits digitization, which enables 8-bit, 10-bit or 12-bit data format output.

The **8-bits sensor digitization** enables 8-bits pixel format. If the camera is set to output 8-bits data, sensor data bits map directly to D0 (LSB) to D7 (MSB).

| **MSB** | **Camera Output – 8 bits (8 bits A/D)** | | | | | | **LSB** |
|---|---|---|---|---|---|---|---|
| D7 | D6 | D5 | D4 | D3 | D2 | D1 | D0 |
| P7 | P6 | P5 | P4 | P3 | P2 | P1 | P0 |

The **10-bits sensor digitization** allows for 8- and 10-bits pixel format.
If the camera is set to output 10-bits data, sensor data bits map directly to D0 (LSB) to D9 (MSB).

| **MSB** | **Camera Output – 10 bits (10 bits A/D)** | | | | | | | **LSB** |
|---|---|---|---|---|---|---|---|---|
| D9 | D8 | D7 | D6 | D5 | D4 | D3 | D2 | D1 | D0 |
| P9 | P8 | P7 | P6 | P5 | P4 | P3 | P2 | P1 | P0 |

With 8-bit output, the camera uses the standard bit reduction process and truncates the least significant bits. The sensor most significant data bits (P2 to P9) map to D0 (LSB) to D7 (MSB).

| **MSB** | **Camera Output – 8 bits (10 bits A/D)** | | | | | | | **LSB** |
|---|---|---|---|---|---|---|---|---|
| D7 | D6 | D5 | D4 | D3 | D2 | D1 | D0 | - | - |
| P9 | P8 | P7 | P6 | P5 | P4 | P3 | P2 | P1 | P0 |

The **12-bits sensor digitization** enables 8-, 10-, and 12-bit data format output. If the camera is set to output 12-bit data, sensor data bits map directly to D0 (LSB) to D11 (MSB).

| **MSB** | | **Camera Output – 12 bits (12 bits A/D)** | | | | | | | | | **LSB** |
|---|---|---|---|---|---|---|---|---|---|---|---|
| D11 | D10 | D9 | D8 | D7 | D6 | D5 | D4 | D3 | D2 | D1 | D0 |
| P11 | P10 | P9 | P8 | P7 | P6 | P5 | P4 | P3 | P2 | P1 | P0 |

With 10-bit output, the camera uses the standard bit reduction process and truncates the least significant bits. The sensor most significant data bits (P2 to P11) map to D0 (LSB) to D9 (MSB

| **MSB** | | **Camera Output – 10 bits (12 bits A/D)** | | | | | | | | | **LSB** |
|---|---|---|---|---|---|---|---|---|---|---|---|
| D9 | D8 | D7 | D6 | D5 | D4 | D3 | D2 | D1 | D0 | - | - |
| P11 | P10 | P9 | P8 | P7 | P6 | P5 | P4 | P3 | P2 | P1 | P0 |

With 8-bit output, the sensor most significant data bits (P4 to P11) map to D0 (LSB) to D7 (MSB).

| **MSB** | | **Camera Output – 8 bits (12 bits A/D)** | | | | | | | | | **LSB** |
|---|---|---|---|---|---|---|---|---|---|---|---|
| D7 | D6 | D5 | D4 | D3 | D2 | D1 | D0 | - | - | - | - |
| P11 | P10 | P9 | P8 | P7 | P6 | P5 | P4 | P3 | P2 | P1 | P0 |

## Output Taps

The Cheetah camera series supports Camera Link Base (2 Tap), Medium (4 tap), Full (8 tap) or Deca (10 taps). The amount of data that can be transferred per unit of time increases with the number of taps selected. The camera reduces the image sensor output rate to match the bandwidth of the output based on the number of taps selected.

When using 10-bit digitization, the Sony Pregius sensors use the data code value 0x3FF (1023d) for synchronization so code value 1022 is the highest valid data code value.

# Gain and Offset

## Image Sensor's Analog and Digital Gain

The image sensor allows you to apply up to 48 dB of gain to the image prior to A/D conversion. The first 24 dB of gain is analog gain and some improvement in noise performance may result. The camera applies the last 24 dB of gain digitally, which affects both signal and noise equally.

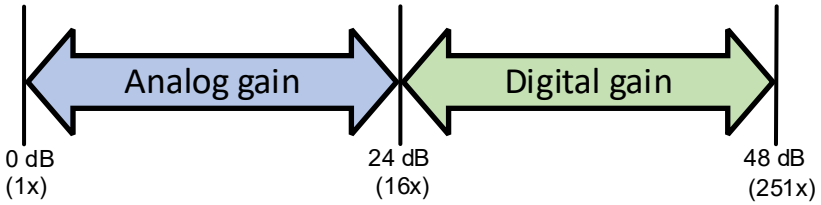


To change the analog/digital gain, use *Analog* control providing 480 gain steps. Each step increases the gain by 0.1 dB. Always apply image sensor's analog/digital gain before applying digital gain.

## Digital Gain

Digital gain is applied after A/D conversion. Digital gain can be varied from 1x (0 dB) to 4x (12 dB) with a precision of ~0.00097x using the raw (fine) gain control. There are 3,092 gain steps from 1x gain to 4x gain. Each step increases the gain by 0.001. Digital gain does not provide any improved contrast and should be used cautiously.

## Digital Offset

Digital offset is a digital count added or subtracted from each pixel. The range is – 511 to +511 counts.

## Black Level Modes

In Auto Black Level mode, the camera automatically adjusts the black level based on measurements of the dark reference lines at the start of each frame. Imperx recommends leaving the black level auto-calibration engaged. You can adjust the Black Level manually from 0 to 255 counts using the User mode. Black level varies with temperature and gain settings.

# Bad Pixel Correction

A CMOS imager is composed of a two-dimensional array of light sensitive pixels. In general, the majority of the pixels have similar sensitivity. However, some pixels deviate from the average pixel sensitivity and are called *bad* pixels. In most cases, bad pixels are responsive to light, and rarely is a pixel totally dark or totally bright.

**Hot pixels** – these are pixels that in normal camera operation behave as normal pixels (sensitivity equal to one of the adjacent pixels). But during long exposures or at elevated temperatures, the pixel becomes far brighter than the average of the pixels surrounding it. In some cases, the pixel becomes so bright that it saturates.

At the factory, final testing identifies and stores maps of both hot and defective pixels. Enabling *Bad Pixel Correction* using the Factory option, corrects hot pixels using the Factory map

## Static Pixel Correction

Static pixel maps provide one method of correcting bad pixels. During factory testing, engineers identify the coordinates of bad pixels. They create a map file listing the pixel coordinates of these pixels by row and column, and the camera corrects the bad pixels found at these coordinates. The map file downloads into the camera's non-volatile memory.

When Factory or User correction is enabled, the camera compares each pixel's coordinates with entries in the pixel map. If a match is found, the camera corrects the defective pixel.

You can create your own Bad Pixel Map (BPM) file and upload it using the Download Terminal.

## Dynamic Pixel Correction

Dynamic pixel correction provides another method of correcting bad pixels. Dynamic correction works without preloaded pixel maps. Instead, you set a Correction Depth value (a threshold value) between zero and 4095 (12-bit) counts. The threshold value is a 12-bit value, so if you are using 8-bits per pixel, the 8-bit value must be translated to a 12-bit value by multiplying by 16. If you are using 10-bits per pixel, the 10-bit value must be translated to a 12-bit value by multiplying by 4.

The threshold determines how much a pixel's luminance can deviate from neighboring pixels. If the deviation between bright or dark is too great, the camera corrects the pixel.

For example, suppose that any single pixel which is brighter than the average value by 50 ADU is considered a hot pixel. 50 ADU in 8-bit space is converted to 12-bits: 50 x 16 = 800 ADU. So 800 ADU is loaded into the dynamic pixel correction threshold value. Suppose that average intensity value is 100 ADU and two single pixels have values of 40 ADU and 60 ADU (8-bits per pixel). With threshold set to 800, the pixel with 60 ADU value will be masked and the pixel with 40 ADU value will not be corrected.

Dynamic and Static corrections can be enabled independently or simultaneously (by setting the Bad Pixel Correction parameter to Dynamic or Dynamic&Factory, or Dynamic&User).

# Transfer Function Correction

The user-defined LUT (Lookup Table) feature transforms any 12-bit video data into any other 12-bit value. For the 10-bit (8-bit) sensor digitization, the camera multiplies the 10-bit (8-bit) pixel data by 4 (by 16) to get 12-bit pixel data for input into the 12-bit LUT. After the 12-bit LUT transforms the data, the camera divides the 12-bit data by 4 (by 16) to get 10-bit (8-bit) pixel values for output to the camera interface.




The camera supports four separate LUTs. All LUTs are available for modifications. You can generate a custom LUT and upload it using Download Terminal (see Uploading the LUT File section).

## Factory LUTs

Each LUT consists of 4096 entries, with each entry being 12 bits wide. LUT1 and LUT3 are factory programmed with a standard Gamma 0.45, LUT2 and LUT4 are pre-programmed with negative LUT ($LUT_{OUTPUT}$ = 4095 – $LUT_{INPUT}$).

The Gamma 0.45 LUT uses the following formula:

$$LUT_{OUTPUT} \text{ (ADU with 12 bpp)} = 4095 * [(LUT_{INPUT}/4095)^{0.45}]$$

For example, if the $LUT_{INPUT}$ is 1024 ADU (12 bpp), then $LUT_{OUTPUT}$ is 4095*(1024/4095)^0.45=2195.

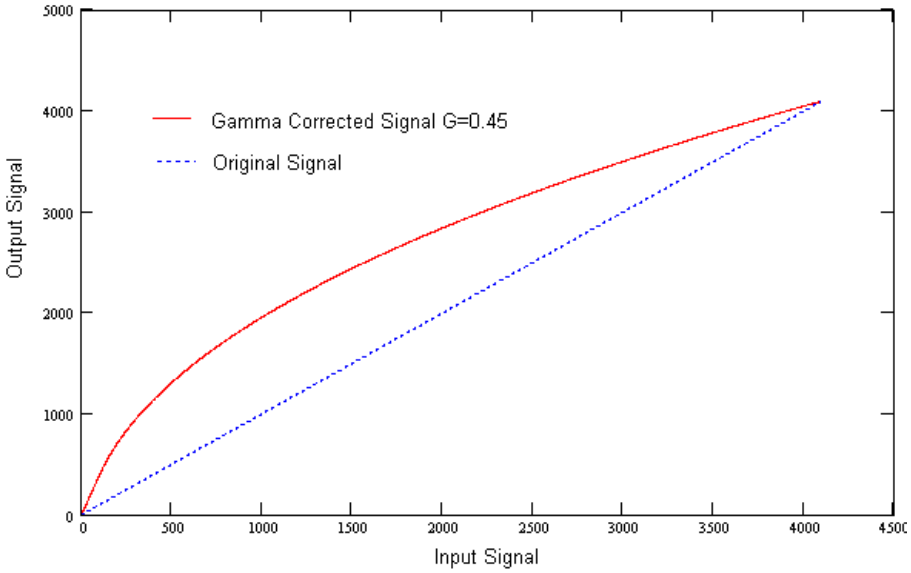

### User-Defined LUTs

You can define any 12-bit to 12-bit transformation as a user LUT and upload it to the camera using Download Terminal (see Uploading the LUT File). You can specify a transfer function to match the camera's dynamic range to the scene's dynamic range. There are no limitations to the profile of the function. The LUT must include all possible input values (0 to 4095) (refer to Appendix C: Look Up Tables).

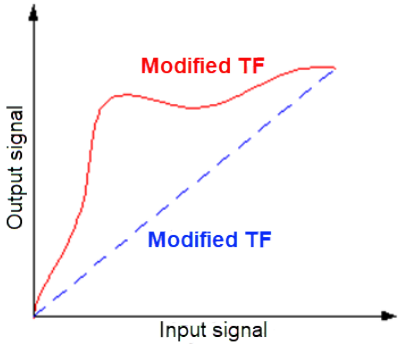


# Color Control

The camera provides white balance options for controlling image color under different lighting conditions. White balance control options are Off, Once, Auto, Manual.

# Image Sensor Technology

A CMOS camera is an electronic device for converting light into an electrical signal. The C2020, C2420, C2420Y/Z, C4020, C4120, C4420, C5420, and C6420 cameras contain the 2nd generation Sony Pregius CMOS (Complementary Metal-Oxide Semiconductor) image sensors with 3.45-micron square pixels while the C1921 and C3220 cameras contain the 3rd generation Sony Pregius CMOS image sensor with 4.5-micron square pixels. The C1621 camera contain 3rd Generation Sony Pregius CMOS image sensor with 9.0-micron square pixels. The C2820, C4510, C5310, and C5311 cameras contain 4th Generation Sony Pregius S CMOS sensors with 2.74-micron square pixels. The sensors have extremely low dark current and no visible fixed pattern noise, which has been the bane of traditional CMOS image sensors.

The Sony CMOS sensor consists of a two-dimensional array of sensitive elements called silicon photodiodes, also known as pixels. The photons falling on the CMOS surface create photoelectrons within the pixels. The number of photoelectrons is linearly proportional to the light level. Although the number of electrons collected in each pixel is linearly proportional to the light level and exposure time, the number of electrons varies with the wavelength of the incident light.

When the camera reaches the desired exposure time, it shifts the charges from each pixel photodiode onto a storage register within the pixel, reads out one row at a time, and then digitizes each pixel at either 8, 10 or 12 bits as selected by the user. The user can also selectively output the most significant 8, 10 or 12 bits from each pixel with an impact to camera's frame

rate. Frame time, or read-out time, is the time interval required for all the pixels to be read out of the image sensor. In non-triggered (Free-running) or fast trigger mode, while reading out the image from the storage registers within each pixel, the camera captures the next image. The exposure ends just as the readout of the previous frame ends and the next frame begins. Unlike traditional CCD image sensors, the Sony CMOS image sensor digitizes each pixel within a row simultaneously. This allows for more settling time, which lowers the overall noise floor and provides improved sensitivity. The low noise floor, combined with a reasonably large pixel charge capacity and extremely low dark current, translates into a large dynamic range of 71 dB (12-bits) or 12 F-stops for 3.45-micron pixels and 77 dB (13-bits) or 13 F-stops for 4.5-micron pixels.

The sensor allows you to apply up to 48 dB of gain to the image. The first 24 dB of gain is analog gain and some improvement in noise performance may result. The camera applies the last 24 dB of gain digitally, which affects both signal and noise equally. Additional digital gain (up to 12 dB) can also be applied using the Digital Gain control.

A set of color filters (red, green, and blue) arranged in a Bayer pattern over the pixels generates color images. The starting color is Red for SONY Pregius image sensors.

# Micro-Polarized Camera

Light travels in electromagnetic waves that vibrate in multiple, random directions. When these unpolarized light waves strike certain surfaces, they tend to reflect or refract light and obscure the imaging target. A polarizer filter integrated into the camera can block certain light waves from reaching the image sensor and thereby improve image quality.

The Sony IMX-250MY/ZR image sensor in the Cheetah C2420Y/Z camera includes a micro-polarizer filter that blocks light waves based on a polarization angle. The filter consists of an array of four polarizers grouped in a 2x2 sub-array (known as a calculation unit). As shown in the following illustrations, each array covers a block of four pixels in the sensor with each polarizer absorbing light at one of four angles—90 degrees, 45 degrees, 135 degrees, or 0 degrees.

For monochrome models:

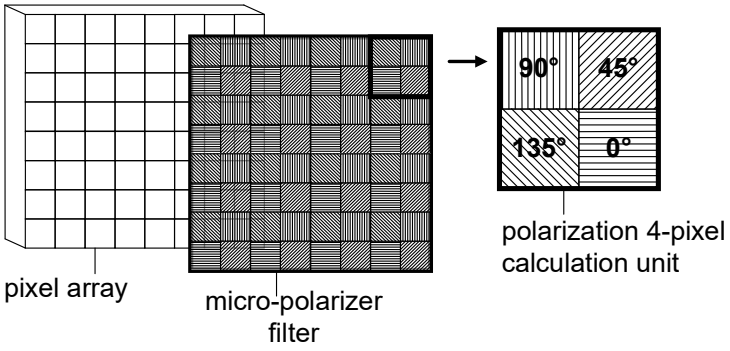


For color models:

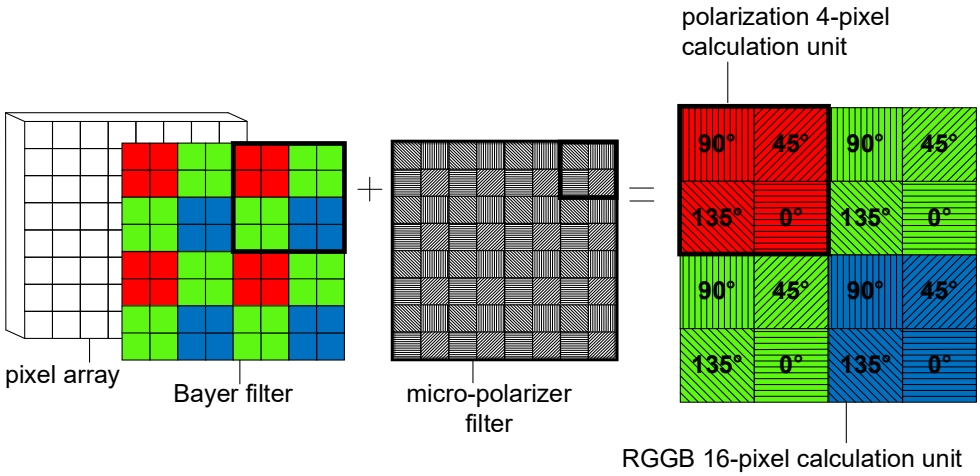

# Register-based Commands

You can control all of the camera's resources (internal registers, video amplifiers and parameter flash) using a simple, register-based command protocol (Appendix A – Camera Register) with the Camera's RS-232 serial interface. The interface is bi-directional. You issue commands, and the camera issues responses (status or information type).

## Configuration Memory

The camera provides configuration memory divided into these 4 segments: factory-space, user-space #1, user-space #2, user-space #3, and user-space #4.

The work-space segment contains the current camera settings while the camera is powered-up and operational. All camera registers are located in this space. You can program and retrieve the registers by issuing commands. The workspace is RAM based. Powering down the camera clears the work-space memory.

The factory-space segment is ROM based and write protected. It contains the default camera settings. This space is available for read operations only.

The user-space #1, user-space #2, user-space #3, and user-space #4 segments are non-volatile and Flash-based. The camera allows you to save the contents of the workspace to either one of these memory spaces and allows you to load these contents into the workspace. In this way, you can easily save and restore up to four different camera configurations.

Upon powering up the camera, the firmware loads the work-space registers from the factory space and user-space #1, user-space #2, user-space #3, and user-space #4 as determined by a boot control register stored in the configuration memory. At any time, you can instruct the camera to loads its workspace with the contents of the factory-space, user-space #1, user-space #2, user-space #3, and user-space #4. You can also instruct the camera to save the current workspace as user-space #1, user-space #2, user-space #3, and user-space #4.

The non-volatile parameter Flash memory also contains Lookup tables (LUTs) and DPM/HPM maps that you can update using the Bobcat Upload Manager program.

## Camera Serial Protocol

To access the camera registers and resources, transmit a sequence of bytes to the camera using the RS-232 serial interface. This is an RS-232 asynchronous, full-duplex serial protocol with 1 start bit, 8 data bits, 1 stop bit, no handshake, and no parity. The following diagram illustrates the RS-232 serial protocol format. You can configure the default baud rate as 9600, 19200, 38400, 57600, or 115200 (default).

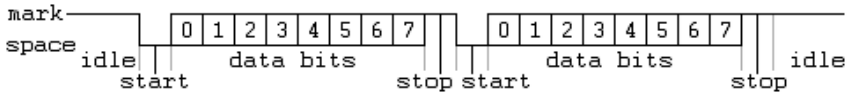

You can update each camera control register independently. The serial protocol defines all registers as 16-bit address (hex format) and 32-bit data (hex format). Camera registers using fewer than 32-bits in width must be padded with 0s on writes; unused bits are ignored on reads. Register data is always packed low within 32-bit data words for registers defined less than 32-bits.

Each command experiences delay due to command execution and data transmission over the serial port. This latency varies from command to command because of resource location and command response length.

## Write Operation

To write to any given camera register, send a sequence of 7 bytes to the camera. If there is no error, the camera returns a one byte acknowledge for the write command <Ack>.

Write to camera (7 Bytes): <Write_Cmd> <Address> <Data>
1st byte: 0x57 (Write Command)
2nd byte: <Register Address_High> MSB
3rd byte: <Register Address_Low> LSB
4th byte: <Register Data Byte 4> MSB
5th byte: <Register Data Byte 3> …
6th byte: <Register Data Byte 2> …
7th byte: <Register Data Byte 1> LSB

Write Acknowledge (1 Byte): <Ack>
1st byte: 0x06 (Acknowledge)

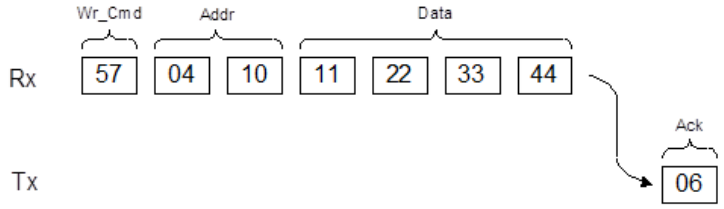


If there is an error, the camera returns two bytes not-acknowledge for the write command – the first byte is <Nac> <Err>, the second is the error code as shown in the following diagrams:

Write Not-acknowledge (2 Bytes): <Nak> <Error Code>
1st byte:0x15 (Not-acknowledge)
2nd byte: <XX> (Nck Error Code. See Error Code Description section)

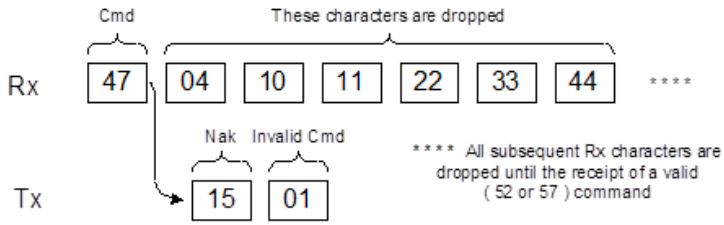

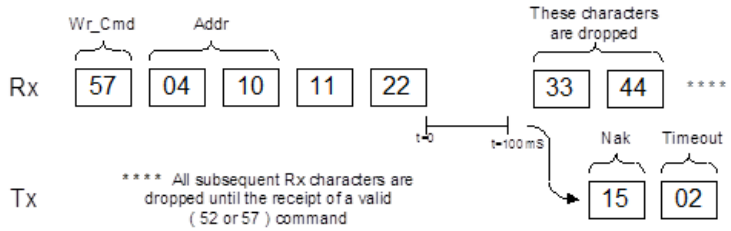


**Example**: Write to register address 0x0410, data value = 0x11223344:

Camera Write Command: <0x57> <04> <10> <11> <22> <33> <44>

## Read Operation

To read from any given camera register, send a sequence of 3 bytes to the camera. If there is no error, the camera returns 5 bytes – one-byte acknowledge for the read command <Ack> and four bytes of data <DD> <DD> <DD> <DD>.

During read operation, the camera does not return an error or <Nac>. The only exception is the case of invalid command shown in the Normal read cycle diagram below. If you specify a wrong address, the camera returns acknowledge <06> and four bytes of data <00> <00> <00> <00>.

Read from camera (3 Bytes): <Read_Cmd> <Address>

1st byte: 0x52 (Read Command)
2nd byte: <Register Address_Low>
3rd byte: <Register Address_High>

The camera returns (5 bytes): <ACK> <Data>

1st byte: 0x06 (Acknowledge)
2nd byte: <Register Data Byte 4> MSB
3rd byte: <Register Data Byte 3> …
5th byte: <Register Data Byte 2> …
6th byte: <Register Data Byte 1> LSB

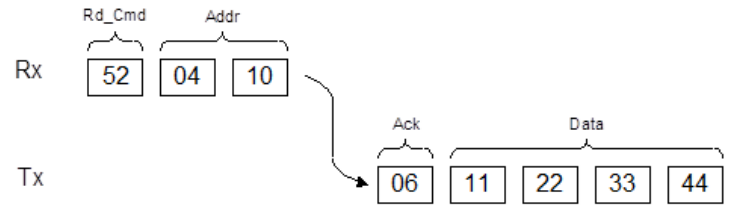


**Example**: Read from camera register address 0x0410:

Camera Read Command: <0x52> <04> <10>

Camera returns register data payload value 0x11223344:

Register data <0x06> <11> <22> <33> <44>

## Error Code Description

To manage camera reliability, use the following not-acknowledge error codes:

x00 – No error
x01 – Invalid command. An invalid command (not 52 or 57) sent to the camera.
x02 – Time-out
x03 – Checksum error
x04 – Value less than minimum
x05 – Value higher than maximum
x06 – AGC error
x07 – Supervisor mode error
x08 – Mode not supported error

# Appendix A – Camera Registers

The Cheetah Pregius series of cameras are programmable and flexible. You can control all of the camera's resources (internal registers, video amplifiers, and parameter FLASH). The user communicates with the camera using a simple, register-based, command protocol via the Camera Link serial interface. The interface is bi-directional with the user issuing commands to the camera and the camera issuing responses (either status or info) to the user. You can also configure and monitor the camera registers and resources. The camera's parameters are programmed using the Cheetah Sony Configurator graphical user interface.

## Camera Register Structure

The register space is structured in four main sections:

- Camera Local Space – starting address 0x6000. This space contains all local camera settings, test registers, user command, FW info and all camera status registers.
- Camera Manufacturing Space – starting address 0x7000. This space contains all camera manufacturing information. Writing to the Manufacturing space is allowed only when the Supervisory mode is enabled.
- Camera EEPROM – starting address 0x5000. This space contains the Boot From settings.
- Camera Factory Space – This space contains all camera registers. This space can be replicated with changes to User (1, 2, 3, and 4) spaces. Save to Factory space is allowed only when the Supervisory mode is enabled.

| Abbreviation | Description |
|---|---|
| RW | read/write |
| RO | read only |
| WO | write only |

### Local Space

| Address | Register Name | Data | | Type | Usage |
|---|---|---|---|---|---|
| 0x6000 | SER_Spare1 | | | RW | |
| 0x6004 | Firmware_Revision | Data (31:28)<br>Data (27:24)<br>Data (23:0) | <FW image><br><CMOS Color><br><FW revision> | RO | Returns camera main firmware revision. |
| 0x6008 | FPGA_EPCS_CustomerID | Address:<br>Data (15:0)<br>Data (19:16)<br>Data (23:20)<br>Data (27:24)<br>Data (31:28) | 0x6008<br><Custom ID #><br><EPCS Type><br><FPGA Type><br><CMOS Chip ID><br><Application type> | RO | Returns firmware parameters such as FPGA type, EPCS type, Customer ID # |

| Address | Register Name | Data | Type | Usage |
|---|---|---|---|---|
| 0x6010 | Camera Temp | Data (9:0) <Temperature value><br>Data (31:10) <N/A> | RO | TEMP = 246.312 – 0.304* D(9:0); where D(9:0) is Temp. value in decimal. d560 (max) to d920 (min). |
| 0x600C | Test | | RW | Sends serial connection status of camera. |
| 0x601C | Soft_Reset | Firmware reset command = 0xDEADBEEF | WO | Initiates software reset. |
| 0x6030 | SW Trigger | | WO | Command instructs camera to generate one short trigger pulse. |
| 0x6038 | Firmware Build# | Data (13:0) <FBN revision><br>Data (31:14) N/A | RO | Returns firmware build number. |
| 0x603C | Camera family ID | Data (13:0) <FBN revision><br>Data (31:14) N/A | RO | Returns camera Family ID. |

## Boot Loader

| Address | Register Name | Data | Type | Usage |
|---|---|---|---|---|
| 0x6060 | User Set Selector | Data (2:0) 0x0 – Factory<br>0x1 – User 1<br>0x2 – User 2<br>0x3 – User 3<br>0x4 – User 4<br>0x5 to 0x7 – reserved<br>Data (31:3) N/A | RW | Instructs camera which FLASH sector will be accessed: factory space or one of 4 user spaces. |
| 0x6064 | User Set Load | | WO | Commands camera to load workspace from selected space 0x6060. |
| 0x6068 | User Set Save | | WO | Commands camera to load workspace from selected space 0x6060. |

## Camera Info Registers

| Address | Register Name | Data | Type | Usage |
|---|---|---|---|---|
| 0x6070 | Hor_Frm_Range | Data (15:0) Min. Horizontal Size<br>Data (31:16) Max. Horizontal Size | RO | Returns min./max. horizontal image frame size in pixels. |
| 0x6074 | Ver_Frm_Range | Data (15:0) Min. Vertical Size<br>Data (31:16) Max. Vertical Size | RO | Returns min./max. vertical image frame size in lines. |

| Address | Register Name | Data | | Type | Usage |
|---|---|---|---|---|---|
| 0x6078 | Cam_Img_Sze | Data (15:0)<br>Data (31:16) | Horizontal Size<br>Vertical Size | RO | Returns current image frame size in pixels. |
| 0x6080 | Cam_Frm_Tim | Data (31:0): Current Frame Time | | RO | Returns current camera frame time in micro-seconds. |
| 0x6084 | Min_Frm_Time | Data (23:0)<br>Data (31:24) | Min. Frame Time<br>N/A | RO | Returns current min. frame time in micro-seconds. |
| 0x6088 | Cam_Exp_Time | Data (23:0)<br>Data (31:24) | Current Exposure Time<br>Min. Exposure Time | RO | Returns current and min. exposure time in micro-seconds. |
| 0x6094 | Wbc_Red, Wbc_Green | Data (11:0)<br>Data (23:12)<br>Data (31:24) | Current Red WBC<br>Current Green WBC<br>N/A | RO | Returns current white balance coefficient values for Red and Green. |
| 0x6098 | Wbc_Blue, wbc_White | Data (11:0)<br>Data (23:12)<br>Data (31:24) | Current Blue WBC<br>Current White WBC<br>N/A | RO | Returns current white balance coefficient values for Blue and White. |
| 0x60A0 | Agc_Lum_Agn | Data (11:0)<br>Data (23:12)<br><br>Data (25:24)<br><br>Data (27:26)<br>Data (29:28)<br><br><br>Data (31:30) | Current Analog Gain<br>Current Average Luminance<br>Gain Max(25)/Min(24) Limit Reached<br>N/A<br>Exposure Max(29)/Min(28) Limit Reached<br>N/A | RO | Returns current analog gain and current average image luminance during normal and AGC operation. |

## EEPROM Space

| Address | Register Name | Data | | Type | Usage |
|---|---|---|---|---|---|
| 0x5000 | Boot User Set Default Selector | Data (2:0)<br><br><br><br><br>Data (31:3) | 0x0 – Boot from Factory<br>0x1 – Boot from User #1<br>0x2 – Boot from User #2<br>0x3 – Boot from User #3<br>0x4 – Boot from User #4<br>0x5, 0x6, 0x7 – reserved | RW | Determines configuration space (Factory, User #1 – User #4) to load in camera after a power cycle or reset ('SW_Reset') command. |

## Gain, Offset, Exposure Control and MAOI Registers

| Address | Register Name | Data | | Type | Usage |
|---|---|---|---|---|---|
| 0x0000 | Analog Gain | Data (8:0)<br><br><br>Data (31:9) | <value> - Gain setting with 0.1dB per step to 48 dB<br>N/A | RW | Sets Analog Gain: 0 – 48 dB; 0.1 dB step. |

| Address | Register Name | Data | | Type | Usage |
|---|---|---|---|---|---|
| 0x0160 | Digital Gain | Data (11:0)<br>Data (31:12) | <value> - Gain setting with 0.001x per step<br>N/A | RW | Sets Digital Gain: 1x to 4x (0 to 12.0 dB) with 0.001x per step. |
| 0x015C | Digital Offset | Data (10:0)<br>Data (31:11) | <value> - Digital offset (-511 to +512)<br>N/A | RW | Sets Digital offset count added to data. |
| 0x0008 | A2D_Bits | Data (1:0)<br>Data (31:2) | 0x0 – 8 bits<br>0x1 – 10 bits<br>0x2 –12 bits<br>N/A | RW | Sets number of IMX A/D conversion bits per Sony. |
| 0x0010 | AOI_Control | Data (1:0)<br>Data (31:2) | 0x0 – MAOI disable<br>0x1 – MAOI enable with frame rate increase<br>0x2 – MAOI enable with constant frame rate<br>N/A | RW | Controls AOI parameters. |
| 0x0014 | Aoi_HwM_Ofs | Data (12:0)<br>Data (31:13) | <value> MAOI offset in horizontal direction<br>N/A | RW | Sets Master AOI Horizontal offset. |
| 0x0018 | Aoi_HwM_Wdt | Data (12:0)<br>Data (31:13) | <value> MAOI width in horizontal direction<br>N/A | RW | Sets Master AOI Horizontal size. |
| 0x001C | Aoi_VwM_Ofs | Data (12:0)<br>Data (31:13) | <value> MAOI offset in vertical direction<br>N/A | RW | Sets Master AOI Vertical offset. |
| 0x0020 | Aoi_VwM_Hgh | Data (12:0)<br>Data (31:13) | <value> MAOI height in vertical direction<br>N/A | RW | Sets Master AOI Vertical size. |
| 0x0024 | Hrz_Decim_En | Data (0)<br>Data (31:1) | 0x0 – Horizontal Decimation disable<br>0x1 – Horizontal Decimation enable<br>N/A | RW | Sets Horizontal Subsampling 2:1. |
| 0x0028 | Ver_Decim_En | Data (0)<br>Data (31:1) | 0x0 – Vertical Decimation disable<br>0x1 – Vertical Decimation enable<br>N/A | RW | Sets Vertical Subsampling 2:1. |
| 0x002C | Ver_Bin_En | Data (0)<br>Data (31:1) | 0x0 – No Vertical Binning<br>0x1 – 2x Vertical Binning<br>N/A | RW | Vertical Binning 2:1 Mode Enable. |
| 0x0030 | Img_Hrev_en | Data (0)<br>Data (31:1) | 0x0 – Horizontal Flip Disable<br>0x1 – Horizontal Flip enable<br>N/A | RW | Flips image left to right. |

| Address | Register Name | Data | | Type | Usage |
|---|---|---|---|---|---|
| 0x0034 | Img_Vrev_en | Data (0)<br><br>Data (31:1) | 0x0 – Vertical Flip Disable<br>0x1 – Vertical Flip enable<br>N/A | RW | Flips the image upside down. |
| 0x0038 | BLK_Adj_en | Data (0)<br><br><br><br>Data (31:1) | 0x0 – enable user black level correction<br>0x1 – Auto black level correction<br>N/A | RW | Enables the black level correction. |
| 0x003C | BLK_Adj_Value | Data (7:0)<br>Data (31:8) | <value> – Black level value<br>N/A | RW | Sets black Level value. |
| 0x0040 | Exp_Ctl_Mod | Data (1:0)<br><br><br><br><br>Data (31:2) | 0x0 – off – no exposure control<br>0x1 – pulse width – for triggering<br>0x2 – internal – exposure control<br>0x3 – N/A<br>N/A | RW | Sets Exposure control mode. |
| 0x0044 | Exp_Tim_Abs | Data (23:0)<br><br>Data (31:24) | <value> – actual exposure time in micro-seconds<br>N/A | RW | Sets Exposure time. |
| 0x0048 | Prg_Frmt_En | Data (0)<br><br><br><br>Data (31:1) | 0x0 – disable Long Integration time<br>0x1 – enable Long Integration time<br>N/A | RW | Programmable Frame Time enable. |
| 0x004C | Prg_Frm_Tim | Data (23:0)<br><br>Data (31:24) | <value> – actual frame time in micro-seconds.<br>N/A | RW | Sets Frame Time (long integration) in micro-seconds. |
| 0x0058 | Aec_Exp_Min | Data (23:0)<br><br>Data (31:24) | <value> – minimum exposure time limit<br>N/A | RW | Sets AEC Exposure Lower Limit (min.) in microseconds. |
| 0x005C | Aec_Exp_Max | Data (23:0)<br><br>Data (31:24) | <value> – maximum exposure time limit<br>N/A | RW | AEC Exposure Upper Limit (max.) in microseconds. |

## Data output, Data Correction, SAOI Registers

| Address | Register Name | Data | | Type | Usage |
|---|---|---|---|---|---|
| 0x0100 | Bit_Dpt_Sel | Data (1:0)<br><br><br><br>Data (31:2) | 0x0 – 8-bit<br>0x1 – 10-bit<br>0x2 – 12-bit<br>0x3 – reserved<br>N/A | RW | Selects bit depth transmitted over Camera Link output. |
| 0x0104 | Dat_Fmt_Sel | Data (2:0)<br><br><br><br><br>Data (31:3) | 0x0 – Base (2 taps)<br>0x1 – Base (3 taps)<br>0x2 – Medium<br>0x3 – Full<br>0x4 – DECA<br>0x5 to 0x7 – reserved<br>N/A | RW | Selects tap format for the CL camera data output. |
| 0x0108 | Test_Mod_Sel | Data (3:0)<br><br><br><br><br><br><br><br><br><br><br><br><br><br>Data (31:4) | 0x0 – no test pattern<br>0x1 – BW checkerboard<br>0x2 – gray image – user selectable value<br>0x3 – tap segmented (each CL tap has a fixed value)<br>0x4 – steady horizontal image ramp<br>0x5 – steady vertical image ramp<br>0x6 – steady vertical & horizontal image ramp<br>0x7 – moving vertical & horizontal image ramp<br>0x8 – 8 gray scale vertical bars<br>0x9 – Center cross superimposed over live image<br>0xA to 0xF – reserved<br>N/A | RW | Selects test mode pattern. |
| 0x010C | Test_Img_Brt | Data (11:0)<br><br>Data (31:12) | <value> - image brightness<br>N/A | RW | Sets test image brightness. |
| 0x0110 | Hor_Bin_En | Data (0)<br><br><br>Data (31:1) | 0x0 – No horizontal binning<br>0x1 – 2x horizontal binning<br>N/A | RW | Sets current binning format in horizontal direction. |
| 0x0114 | LUT_En | Data (2:0)<br><br><br><br><br>Data (31:3) | 0x0 – No LUT selected<br>0x1 – LUT #1 selected<br>0x2 – LUT #2 selected<br>0x3 – LUT #3 selected<br>0x4 – LUT #4 selected<br>0x5 to 0x7 – unused<br>N/A | RW | Selects LUT to use. |

| Address | Register Name | Data | | Type | Usage |
|---|---|---|---|---|---|
| 0x011C | BPC_En | Data (1:0)<br><br><br><br><br><br>Data (31:2) | 0x0 – BPC disable<br>0x1 –Factory Map BPC enable<br>0x2 – Dynamic BPC enable<br>0x3 – Factory & Dynamic BPC enable<br>0x4 – User Map BPC enable<br>0x5 – User Map & Dynamic BPC enable<br>N/A | RW | Enables Bad Pixel Correction (BPC). |
| 0x0120 | Dyn_BPC_Thld | Data (11:0)<br>Data (31:2) | <value> - Threshold value<br>N/A | RW | Sets Dynamic Pixel Correction (DPC) threshold. |
| 0x0124 | FFC_En | Data (1:0)<br><br><br>Data (31:2) | 0x0 – FFC disable<br>0x1 – FFC 1 enable<br>0x2 – FFC 2 enable<br>N/A | RW | Enables Flat Field Correction (FFC). |
| 0x0128 | Neg_Img_En | Data (0)<br><br>Data (31:1) | 0x0 – Positive image<br>0x1 – Negative image<br>N/A | RW | Enables negative image. |
| 0x012C | Aoi_Slv1_En | Data (2:0)<br><br><br><br><br><br><br><br><br><br><br><br>Data (31:3) | 0x0 – SAOI disable<br>0x1 – SAOI include<br>0x2 – SAOI exclude<br>0x3 –AEC/AGC target level uses pixel values inside the SAOI<br>0x4 – AEC/AGC target value excludes pixel values inside SAOI<br>0x5 –AWB coefficients determined by values inside the SAOI<br>0x6 –AWB coefficients determined by values outside the SAOI<br>0x7 – LUT applies to pixels inside the SAOI<br>0x8 – LUT applies to pixels outside the SAOI<br>N/A | RW | Enables Slave AOI and sets window size and various ways slave AOI can be used by the camera. |
| 0x0130 | Aoi_HwS_Ofs | Data (12:0)<br><br>Data (31:13) | <value> SAOI offset in horizontal direction<br>N/A | RW | Sets Slave AOI Horizontal offset. |
| 0x0134 | Aoi_HwS_Wdt | Data (12:0)<br><br>Data (31:1) | <value> SAOI width in horizontal direction<br>N/A | RW | Sets Slave AOI Horizontal size. |
| 0x0138 | Aoi_VwS_Ofs | Data (12:0)<br><br>Data (31:13) | <value> SAOI offset in vertical direction<br>N/A | RW | Sets Slave AOI Vertical offset. |

| Address | Register Name | Data | | Type | Usage |
|---|---|---|---|---|---|
| 0x013C | Aoi_VwS_Hgh | Data (12:0)<br><br>Data (31:13) | <value> SAOI height in vertical direction<br>N/A | RW | Sets Slave AOI Vertical size. |
| 0x0140 | Aec_Ctl_En | Data (0)<br><br><br><br>Data (31:1) | 0x0 – disable auto exposure control<br>0x1 – enable auto exposure control<br>N/A | RW | Enables Auto Exposure Control (AEC). |
| 0x0144 | Agc_Ctl_En | Data (0)<br><br><br><br>Data (31:1) | 0x0 – disable auto gain control<br>0x1 – enable auto gain control<br>N/A | RW | Enables Auto Gain Control (AGC). |
| 0x0148 | Agc_Lum_Lev | Data (11:0)<br><br>Data (31:12) | <value> – desired luminance level<br>N/A | RW | Provides AGC luminance level control. |
| 0x014C | Avg_Peak_Sel | Data (1:0)<br><br><br>Data (31:2) | 0x0 – average luminance<br>0x1 – peak luminance<br>0x2 or 0x3 – reserved<br>N/A | RW | Sets luminance mode during AEC or AGC process. |
| 0x0150 | Agc_Agn_Min | Data (8:0)<br><br>Data (31:9) | <value> – minimum AGC gain limit<br>N/A | RW | Sets AGC Gain Lower Limit (min.) in dB (0 to 48 dB, 0.1 dB per step). |
| 0x0154 | Agc_Agn_Max | Data (8:0)<br><br>Data (31:9) | <value> – Maximum AGC gain limit<br>N/A | RW | Sets AGC max. limit in dB (0 to 48dB with 0.1dB per step). |
| 0x0158 | Dat_Shft_Sel | Data (3:0)<br><br><br><br><br><br><br><br><br><br><br><br><br><br><br><br>Data (31:4) | 0x0 – no shift<br>0x1 – 1 bit left<br>0x2 – 2 bits left<br>0x3 – 3 bits left<br>0x4 – 4 bits left<br>0x5 – 5 bits left<br>0x6 – 6 bits left<br>0x7 – 7 bits left<br>0x8 – reserved<br>0x9 – 1 bit right<br>0xA – 2 bits right<br>0xB – 3 bits right<br>0xC – 4 bits right<br>0xD – 5 bits right<br>0xE – 6 bits right<br>0xF – 7 bits right<br>N/A | RW | Selects bit shift steps for camera data output. |

| Address | Register Name | Data | | Type | Usage |
|---|---|---|---|---|---|
| 0x0164 | Agc_Aec_Spd_Ctl | Data (1:0)<br><br><br><br>Data (31:2) | 0x0 – 01x speed (slow)<br>0x1 – 2x speed<br>0x2 – 3x speed<br>0x3 – 4x speed (fast)<br>N/A | RW | Sets the exposure correction speed during AGC.AEC. |

## White Balance Registers

| Address | Register Name | Data | | Type | Usage |
|---|---|---|---|---|---|
| 0x0200 | WB_en | Data (1:0)<br><br><br><br>Data (31:2) | 0x0 – Off<br>0x1 – WB Once<br>0x2 – WB Auto<br>0x3 – WB Manual<br>N/A | RW | Selects the white balance mode. |
| 0x0204 | WB_Red | Data (11:0)<br><br>Data (31:12) | <value> – WB Red coefficient<br>N/A | RW | Contains white balance correction coefficients for Red. In manual mode, user enters the coefficients. |
| 0x0208 | WB_Green | Data (11:0)<br><br>Data (31:12) | <value> – WB Green coefficient<br>N/A | RW | Contains the white balance correction coefficients for Green. In manual mode, user enters the coefficients. |
| 0x020C | WB_Blue | Data (11:0)<br><br>Data (31:12) | <value> – WB Blue coefficient<br>N/A | RW | Contains the white balance correction coefficients for Blue. In manual mode, user enters the coefficients. |

# Trigger, I/O Interface, Strobe and Pulse Generator Registers

| Address | Register Name | Data | | Type | Usage |
|---|---|---|---|---|---|
| 0x0500 | Trg_Mode_En | Data (0)<br><br><br><br>Data (31:1) | 0x0 – trigger is disabled, free running mode<br>0x1 – trigger is enabled; camera in trigger mode<br>N/A | RW | Enables Trigger mode. |
| 0x0504 | Trg_Inp_Sel | Data (2:0)<br><br><br><br><br><br><br><br><br><br><br><br><br><br>Data (31:3) | 0x0 – N/A<br>0x1 – External 1; camera expects trigger from Input #1, IN1<br>0x2 – Internal; camera expects trigger from programmable pulse generator.<br>0x3 – computer; camera expects trigger from CC1 via Camera Link cable.<br>0x4 – software trigger; expects a one clock cycle pulse generated by software. Exposure is internal timer controlled. Pulse duration exposure not allowed.<br>0x5 – External 2; camera expects trigger from Input #2, IN 2.<br>0x6 to 0xF – N/A<br>N/A | RW | Selects Trigger input. |
| 0x0508 | Trg_Edg_Sel | Data (0)<br><br>Data (31:1) | 0x0 – rising edge<br>0x1 – falling edge<br>N/A | RW | Selects Trigger active edge. |
| 0x050C | Trg_Dbn_Tim | Data (15:0)<br>Data (31:16) | <value> –debounce time<br>N/A | RW | Selects trigger signal de-bounce time in micro-seconds. |
| 0x0510 | Trg_Flt_Tim | Data (15:0)<br>Data (31:16) | <value> –glitch time<br>N/A | RW | Selects Filter time in micro-seconds. Any pulse shorter than the selected time is ignored. |
| 0x0514 | Trg_Ovr_Sel | Data (1:0)<br><br><br><br>Data (31:2) | 0x0 – ignore next trigger<br>0x1 – accept only after exposure is completed<br>0x2 – N/A<br>0x3 – N/A<br>N/A | RW | Selects trigger overlap mode. If camera receives a trigger pulse while still processing previous trigger, user has option to ignore the incoming trigger or to terminate previous process and start a new one. |

| Address | Register Name | Data | | Type | Usage |
|---|---|---|---|---|---|
| 0x0518 | Trg_Mod_Sel | Data (3:0)<br><br><br><br>Data (31:4) | 0x0 – standard triggering<br>0x1 – fast triggering<br>0x2 – reserved<br>0x3 to 0xF – reserved<br>N/A | RW | Selects triggering mode. |
| 0x051C | Trg_Frm_Cap | Data (15:0)<br><br>Data (31:16) | <value> –number of frames per trigger<br>N/A | RW | Selects number of frames captured after each trigger signal. |
| 0x0520 | Trg_Exp_Del | | | RW | Selects delay in microseconds between trigger signal and beginning of exposure. |
| 0x0524 | Trg_Str_En | Data (1:0)<br><br><br><br><br>Data (31:2) | 0x0 – disable Trigger Strobe<br>0x1 – enable Trigger Strobe #1<br>0x2 – enable Trigger Strobe #1<br>0x3 – enable both Trigger Strobe #1 and #2<br>N/A | RW | Enables Trigger strobe. |
| 0x0528 | Trg_Str_Del | Data (23:0)<br><br>Data (31:24) | <value> –Strobe delay in microseconds<br>N/A | RW | Sets delay between trigger pulse and strobe pulse. |
| 0x052C | Str_One_En | Data (1:0)<br><br><br><br><br>Data (31:2) | 0x0 – disable Strobe #1<br>0x1 – enable Strobe #1, each frame<br>0x2 – enable Strobe #1, odd frames only<br>0x3 – enable Strobe #1, even frames only<br>N/A | RW | Sets Strobe 1 mode of operation. |
| 0x0530 | Str_One_Dur | Data (15:0)<br><br>Data (31:16) | <value> –Strobe #1 Pulse width in microseconds<br>N/A | RW | Sets Strobe 1 duration in microseconds. |
| 0x0534 | Str_One_Pos | Data (23:0)<br><br><br>Data (31:24) | <value> –Strobe #1 Pulse position in microseconds up to one frame time<br>N/A | RW | Sets Strobe 1 position in microseconds. |
| 0x0538 | Str_Two_En | Data (1:0)<br><br><br><br><br>Data (31:2) | 0x0 – disable Strobe #2<br>0x1 – enable Strobe #2 each frame<br>0x2 – enable Strobe #2 odd frames only<br>0x3 – enable Strobe #2 even frames only<br>N/A | RW | Sets Strobe #2 mode of operation. |

| Address | Register Name | Data | | Type | Usage |
|---|---|---|---|---|---|
| 0x053C | Str_Two_Dur | Data (15:0)<br><br>Data (31:16) | <value> –Strobe #2 Pulse width in microseconds<br>N/A | RW | Sets Strobe 2 duration in microseconds. |
| 0x0540 | Str_Two_Pos | Data (23:0)<br><br><br>Data (31:24) | <value> –Strobe #2 Pulse position in microseconds up to one frame time<br>N/A | RW | Sets Strobe 2 position in microseconds. |
| 0x0544 | Pls_Gen_Stp | Data (1:0)<br><br><br><br>Data (31:2) | 0x0 – x1<br>0x1 – x10<br>0x2 – x100<br>0x3 – x1000<br>N/A | RW | Sets pulse generator main timing resolution. |
| 0x0548 | Pls_Gen_Wdt | Data (23:0)<br><br><br>Data (31:24) | <value> –Sets Pulse width in microseconds when multiplied by granularity setting<br>N/A | RW | Sets the value of the pulse width in microseconds. |
| 0x054C | Pls_Gen_Per | Data (23:0)<br><br><br>Data (31:24) | <value> –Sets Pulse period in microseconds when multiplied by granularity setting<br>N/A | RW | Sets the value of the pulse period in microseconds. |
| 0x0550 | Pls_Gen_Nmb | Data (15:0)<br><br>Data (16)<br><br>Data (31:17) | <value> – number of discrete pulses<br>0x1 – continuous pulse generation<br>N/A | RW | Sets the number of the pulses generated. If Bit 16 is set, continuous mode selected. |
| 0x0554 | Pls_Gen_En | Data (0)<br><br>Data (31:1) | 0x0 – disable Pulse Gen<br>0x1 – enable Pulse Gen<br>N/A | RW | Enables pulse generator. |
| 0x0558 | OUT1_Pol_sel | Data (0)<br><br>Data (31:1) | 0x0 – active LOW<br>0x1 – active HIGH<br>N/A | RW | Selects OUT1 polarity (active Low or High). |
| 0x055C | OUT1_Map_Sel | Data (7:0)<br><br><br><br><br><br><br><br><br><br><br><br><br><br><br><br>Data (31:8) | 0x0 – no mapping<br>0x1 – exposure start<br>0x2 – exposure end<br>0x3 – mid exposure<br>0x4 – active exposure window<br>0x5 – H sync<br>0x6 – V sync<br>0x7 – odd/even frame flag<br>0x8 – trigger pulse actual<br>0x9 – trigger pulse delayed<br>0xA – camera ready<br>0xB – pulse generator<br>0xC – strobe #1<br>0xD – strobe #2<br>0xE – toggle OUT 1<br>0xF – Frame pulse<br>N/A | RW | Maps the various internal signals to OUTPUT # 1 (OUT 1). |

| Address | Register Name | Data | | Type | Usage |
|---|---|---|---|---|---|
| 0x0560 | OUT2_Pol_sel | Data (0)<br><br>Data (31:1) | 0x0 – active LOW<br>0x1 – active HIGH<br>N/A | RW | Selects OUT2 polarity (active Low or High). |
| 0x0564 | OUT2_Map_Sel | Data (7:0)<br><br><br><br><br><br><br><br><br><br><br><br><br><br><br><br>Data (31:8) | 0x0 – no mapping<br>0x1 – exposure start<br>0x2 – exposure end<br>0x3 – mid exposure<br>0x4 – active exposure window<br>0x5 – H sync<br>0x6 – V sync<br>0x7 – odd/even frame flag<br>0x8 – trigger pulse actual<br>0x9 – trigger pulse delayed<br>0xA – camera ready<br>0xB – pulse generator<br>0xC – strobe #1<br>0xD – strobe #2<br>0xE – toggle OUT 1<br>0xF – Frame Pulse<br>N/A | RW | Maps the various internal signals to Output #2 (OUT 2). |

## P-Iris Control Registers

(Optional for C1621, C1921, C2020, C2420, C2420Y/Z, C2820, C3220, C4020, C4120, C4510, C5310, and C5311 cameras only)

| Address | Register Name | Data | | Type | Usage |
|---|---|---|---|---|---|
| 0x6200 | P-Iris Step Value | Data (7:0)<br><br>Data (31:8) | <value> – Step Size for Close and Open Step commands<br>N/A | RW | Step size increment. Smaller step size = finer resolution. |
| 0x6204 | P-Iris Close-Step | <COMMAND> | | WO | Writing to this register closes the iris one step. |
| 0x6208 | P-Iris Open-Step | <COMMAND> | | WO | Writing to this register opens the iris one step. |
| 0x620C | P-Iris Close-Full | <COMMAND> | | WO | Writing to this register closes the iris fully. |
| 0x6210 | P-Iris Open-Full | <COMMAND> | | WO | Writing to this register opens the iris fully. |
| 0x6258 | P-Iris State Value | Data (7:0)<br>Data (15:8)<br>Data (23:16)<br>Data (31:24) | <Current Iris Position><br>Min Value 1 – always 0<br>Min Value 2 – always 0<br>Max Value – Depends on lens model. (Set to Kowa = 73; for Schneider = 32) | RO | Provides Iris position value. |

| Address | Register Name | Data | Type | Usage |
|---|---|---|---|---|
| 0x0404 | Piris_max_nmb | Data (7:0) <P-Iris max. number of steps><br>Data (31:8) N/A | RW | P-Iris maximum number of steps. By default, set to 73 (for a Kowa lens). |
| 0x0400 | Piris_saved_pos | Data (7:0) <P-Iris Saved Position><br>Data (31:8) N/A | RW | P-Iris Saved Position. |
| 0x017C | Irs_Ctl_En | Data (0) 0x0 – AIC disabled (manual mode)<br>0x1 – AIC enabled<br>Data (31:1) N/A | RW | Enables Automatic Iris Control (AIC). |
| 0x0170 | Aic_Iris_Min | Data (7:0) <Minimum Auto Iris><br>Data (31:8) N/A | RW | Min. iris position = 0. The iris opening (aperture) is maximum. |
| 0x0174 | Aic_Iris_Max | Data (7:0) <Maximum Iris Auto><br>Data (31:8) N/A | RW | Max. iris position depends upon a lens model. The iris opening (aperture) is minimum. |

## Canon EF Lens Control Registers

(C4420, C5420, C6420, C4420-T, C5420-T, C6420-T cameras only)

| Address | Register Name | Data | Type | Usage |
|---|---|---|---|---|
| 0x6200 | IRIS Step Value | Data (7:0) <IRIS Step><br>Data (31:8) N/A | RW | Sets the IRIS step increment value. |
| 0x6204 | IRIS Close Step | | WO | Closes IRIS one step per command. The step value is set above 0x6200. |
| 0x6208 | IRIS Open Step | | WO | Opens IRIS one step per command. The step value is set above 0x6200. |
| 0x620C | IRIS Close Full | | WO | Command fully closes the IRIS. |
| 0x6210 | IRIS Open Full | | WO | Command fully opens the IRIS. |
| 0x6214 | IRIS Stop | | WO | Command stops IRIS movement. |
| 0x6218 | FOCUS Step Value | Data (7:0) <FOCUS Step><br>Data (31:8) N/A | WR | Sets FOCUS step increment value. |
| 0x621C | FOCUS Close Step | | WO | Closes focus one step per command. The step value is set above by 0x6218. |
| 0x6220 | FOCUS Open Step | | WO | Opens focus one step per command. The step value is set above by 0x6218. |

| Address | Register Name | Data | Type | Usage |
|---|---|---|---|---|
| 0x6224 | FOCUS Near Full | | WO | Command sets FOCUS to full Near position. |
| 0x6228 | FOCUS Far Full | | WO | Command sets FOCUS to full Far position. |
| 0x622C | FOCUS Stop | | WO | Command stops FOCUS if/while its moving. |
| 0x6230 | CANON Lens Init | | WO | Command initializes CANON lens. |
| 0x6234 | CANON Get Aperture Range | | WO | Command gets CANON lens aperture range. |
| 0x623C | CANON Get FOCUS Encoder Value | | WO | Command gets CANON FOCUS encoder value. |
| 0x6240 | CANON Reset FOCUS Encoder Value | | WO | Command that gets the CANON lens reset encoder value. |
| 0x6258 | CANON IRIS State | Data (7:0) Current position<br>Data (15:8) <Min1><br>Data (23:16) <Min2><br>Data (31:24) <IRIS State> | RO | Holds IRIS state value. |
| 0x625C | CANON FOCUS State | Data (15:0) <FOCUS Status><br>Data (31:16) N/A | RO | Holds FOCUS state value. |
| 0x6264 | CANON Lens Controller Status | Data (1:0) N/A<br>Data (2) 0x0 – Auto focus<br>0x1 – Manual focus<br>Data (3) 0x0 – Lens Init failed<br>0x1 – Lens Init passed<br>Data (31:4) N/A | RO | Holds Lens Controller Status value. |

## Miscellaneous Registers

| Address | Register Name | Data | Type | Usage |
|---|---|---|---|---|
| 0x0604 | Baud_rate_sel | Data (2:0) 0x0 – 9600<br>0x1 – 19200<br>0x2 – 38400<br>0x3 – 57600<br>0x4 – 115200 (default)<br>0x5 to 0x7 – reserved<br>Data (31:3) N/A | RW | RS-232 Baud Rate Selector 0=9600, 1=19200, 2=38400, 3=57600 and 4=115200 bps. |
| 0x060C | RGS_ID#_Register | | RW | Contains RGS ID number register. |

# Appendix B: Creating HPC table

## Overview

Defective Pixel Correction and Hot Pixel Correction work with predetermined and preloaded Defective and Hot pixel maps. The Defective Pixel Map (DPM) and Hot Pixel Map (HPM) are downloaded into the camera's non-volatile memory.

You can edit the original HPM file, create your own file and upload it to fit the unique requirements of your operating environment or camera use.

The original DPM cannot be changed.

## Downloading DPM / HPM Files

To download the original DPM or HPM file, follow steps below:

1. Open the camera's software GUI.

2. Click **Menu** and select **DPM/HPM**. The **Bad Pixel Map** screen appears.

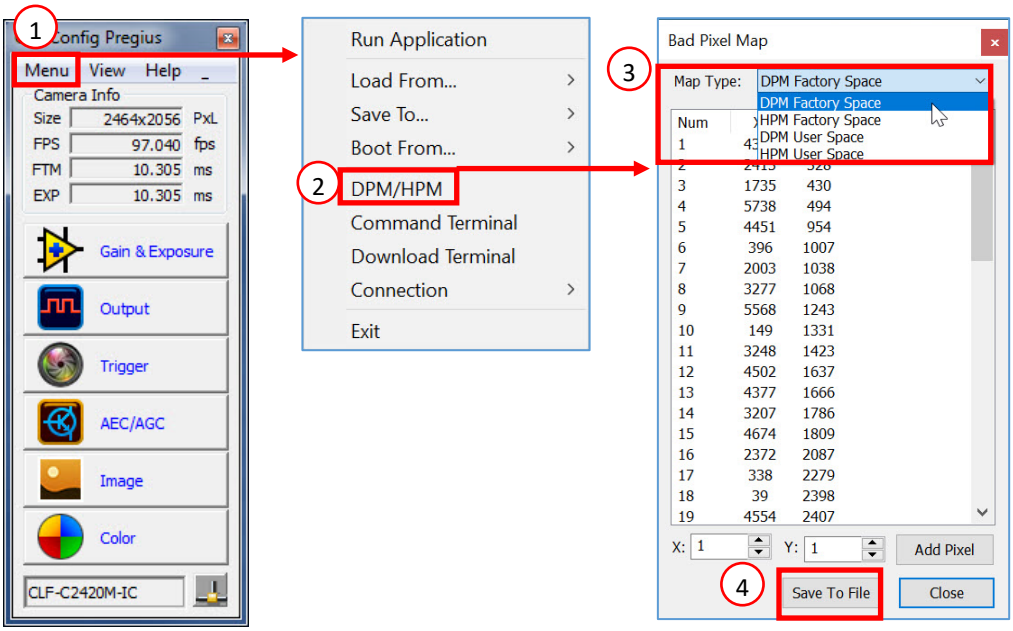


3. Select **DPM Factory Space** or **HPM Factory Space** in the drop-down menu **Map Type.**

4. Click **Save to File**. Navigate to where you want to save the file and create a file name and extension based on the type of file:
   - Use the extension .dpm if saving a Defective Pixel Map.
   - Use the extension .hpm if saving a Hot Pixel Map.

# Editing HPM Files

You can edit HPM file in Microsoft Notepad or any other editing software. The file is a simple text file and looks like this:

```
-- Defective Pixel Map,
-- Date: 12.12.2019,
-- Model#: CLF-C4120M-RC,
-- Serial#: LAC001,
:Table,
-- Column(X),Row(Y)
           4052,155
           3091,332
           3532,893
            650,1017
            701,1017
           1712,1053
            914,1067
```

Pixel maps have two main sections: a header and a table. The header section is a free text area of up to 256 ASCII characters. Each line of the header section must be terminated with a comma. The table section of the file contains an array of lines with each line containing an X (column number) value followed by a comma and a Y (row number) value.

All pixels are listed in the HPM in order of increasing Y (row) location. If there are multiple hot or defective pixels in the same row (Y location is identical for both defective pixels), the listing is in order of increasing X (column) location.

The maximum number of pixels in the HPM list is 4096.
To edit original HPM file, you need to identify hot pixels, locate and adjust their coordinates, and accurately place pixels' coordinates into the pixel map.

## Finding Hot Pixels

To find all hot pixels that need to be added to the map, put the lens cap on the camera and capture an image after the camera has reached the normal operating temperature. Use the longest expected exposure time at the normal frame rate. If the camera will operate with variable frame rates, set the camera to the slowest frame rate expected.

Make sure that the **Bad Pixel Correction** is set to **Factory** on the **Image Control** screen of the **CamConfig** GUI, so the camera will correct the known hot pixels automatically. From this image, you can then identify all of the hot pixels not in the factory map and add them to the hot pixel map.

# Locating and Adding Pixel Coordinates

Follow the steps below to find first pixel coordinates, locate and adjust defective pixel coordinates, and accurately place defective pixel coordinates into the pixel map.

**STEP 1: Find the First Pixel Coordinates**

Your frame grabber's first pixel coordinates can affect the location accuracy of hot pixel coordinates. So, you must find the image sensor's first pixel coordinates and potentially adjust the hot pixel coordinates based on your findings.

Click the first pixel at the upper most left corner of the screen to find your frame grabber's first pixel X, Y coordinates.

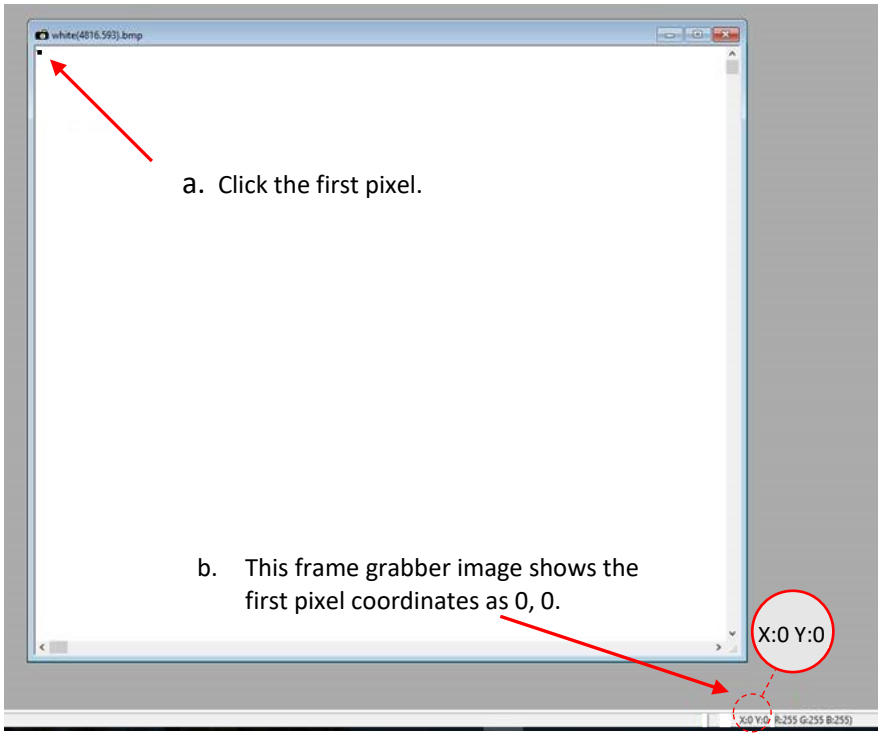


The coordinates will be either 0, 0 or 1, 1:

- If your frame grabber's first pixel coordinates are 0,0, you must add 1 to both the X and Y coordinates of the bad pixel.
- If the first pixel coordinates are 1, 1, do not add 1 to either coordinate.

**STEP 2: Find Hot Pixel Coordinates**
Click the hot pixel to find its X, Y coordinates.

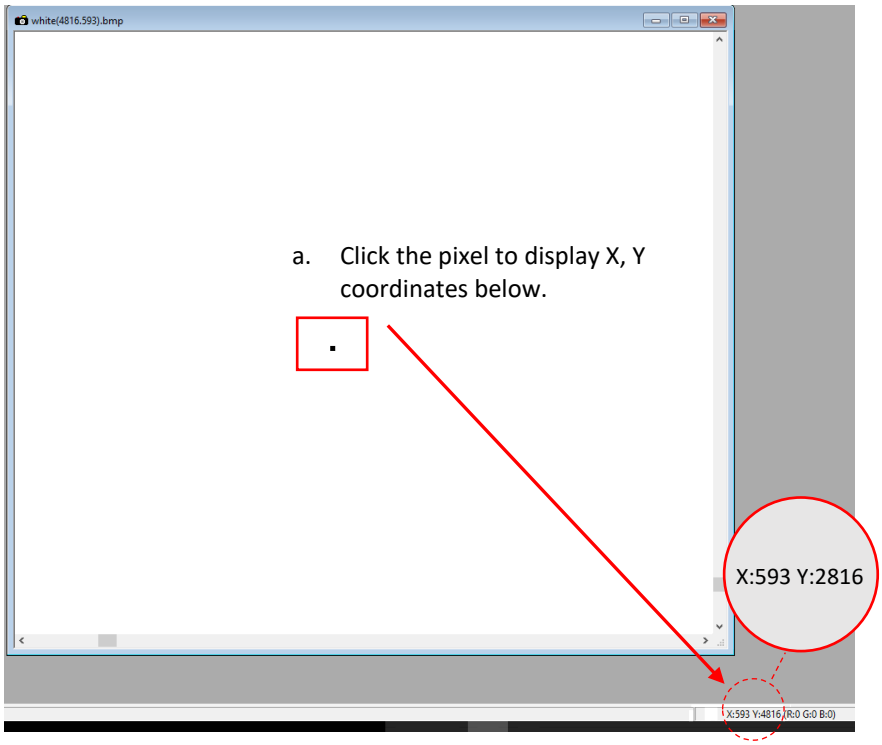


The coordinates are 593, 2816 — where X (Column) = 593 and Y (Row) = 2816.

**IMPORTANT:** Frame grabbers from different manufacturers may display pixel location coordinates in different order, for example:

**X (Column), Y (Row)** or,
X (Row), Y (Column).

You must put defective pixel coordinates into the pixel correction map file in this order: **X (Column), Y (Row)**.

If your frame grabber identifies pixel coordinates by X **(Row)**, Y **(Column)**, you must transpose the coordinates to X (**Column**), Y (**Row**) before entering them into the pixel map files. For example, if the 593, 2816 coordinates in the screen above had been displayed in this order, where X:593 is row and Y:2816 is column, you would have had to transpose the coordinates to 2816, 593.

**STEP 3: Adjust Defective Pixel Coordinates**
As described in **STEP 1**, if the first pixel coordinates are 0, 0, you must adjust the hot pixel coordinates by adding 1 to both coordinates as shown in the following:

593 (+1), 2816 (+1) = 594, 2817

- If the frame grabber pixel coordinates are Column (X), Row (Y), then go to **STEP 4**.
- If the frame grabber pixel coordinates are Row (X), Column (Y), then transpose the coordinates to the form Column, Row and then go to **STEP 4**.

**STEP 4: Add Hot Pixel Coordinates to Hot Pixel Map**

Place the hot pixel coordinates in the Hot Pixel Map file in ascending (increasing) numerical order of the Y (row) coordinate. The value of all Y coordinates should progressively increase as you look down the list of X, Y coordinates.

**Example 1: Different Y coordinates**

```
-- Defective Pixel Map,
-- Date: 12.12.2019,
-- Model#: CLF-C4120M-RC,
-- Serial#: LAC001,
:Table,
-- Column(X),Row(Y)
701,1017
100,1018
4005,1019
2241,1020
458,1021
1712,1053
914,1067
3954,1546
2516,1670
1111,2149
95,2364
594,2817
433,2828
205,2899
```

Row coordinates are in ascending order (increasing Y values).

**Example 2: Identical Y coordinates**

```
-- Defective Pixel Map,
-- Date: 12.12.2019,
-- Model#: CLF-C4120M-RC,
-- Serial#: LAC001,
:Table,
-- Column(X),Row(Y)
650,1017
698,1017
701,1017
100,1018
4005,1019
2241,1020
458,1021
1712,1053
914,1067
3954,1546
2516,1670
1111,2149
95,2364
433,2828
205,2899
```

Column coordinates are in ascending order (increasing X values).

As shown in the **Example 1** above, the Y coordinate of 594, 2817 is higher than **2364** and lower than **2828**. Do not add hot pixel coordinates at the end of the list unless the Y coordinate is the highest of all Y values.

**NOTE** ⊛ If adding a hot pixel with a Y location identical to one or more other hot pixels, insert its coordinates based on the order of increasing X location.

As shown in the **Example 2** above, the Y coordinate of 698, 1017 is identical to two other hot pixels. Place its coordinates between **650,** 1017 and **701,** 1017 because its X location (698) is higher than 650 but lower than 701.

**STEP 5: Save your HPM**

Save your Hot Pixel Map with file extension .hpm.

# Creating New HPM File

You can create your own HPM files using any ASCII text editor, such as “Notepad” or similar. Alternatively, any spreadsheet program (i.e. Microsoft Excel) can be used by converting the spreadsheet into a comma delimited (.csv) file. In either case, the file must be renamed to include the .dpm or .hpm file extension. The files look like this:

```
-- Defective Pixel Map,
-- Date: 2.23.2018,
-- Model#: CLF-C4120M-RC,
-- Serial#: LAC001,
:Table,
-- Column(X),Row(Y)
           4052,155
           3091,332
           3532,893
            650,1017
            701,1017
           1712,1053
            914,1067
```

Pixel maps have two main sections: a header and a table. The header section is a free text area of up to 256 ASCII characters. Each line of the header section must be terminated with a comma. The table section of the file contains an array of lines with each line containing an X (column number) value followed by a comma and a Y (row number) value.

All pixels are listed in the HPM in order of increasing Y (row) location. If the Y location is identical, the listing is in order of increasing X (column) location.

The maximum number of pixels in the DPM list is 512 and in HPM list is 4096.

**To create an HPM file:**

1. Identify hot pixels (refer to the sections Finding Hot Pixels).

**IMPORTANT:** When creating a new pixel map, you need to get all hot pixel visible. Ensure that the **Bad Pixel Correction** is set to **Off** on the **Image Control** screen of the CamConfig GUI, so the camera will not correct the known pixel defects.

2. Locate and adjust hot pixels’ coordinates (refer to the section Locating and Adding Pixel Coordinates , **STEP1 – STEP3**).

3. Place pixels’ coordinates into the pixel map and save the file (refer to the section Locating and Adding Pixel Coordinates **STEP4, STEP5**).

# Uploading HPM Files

After saving the maps, you can upload them to the camera using **Download Terminal** from the main Menu.

Alternatively, you can use Imperx **Upload Utility**. The Upload Utility enables uploads of HPM, LUT, and other files to your camera.

**To upload the HPM file:**

1. Connect and power up your camera.

2. Start the Imperx **Upload Utility** and wait for the Utility to detect the camera.
   If the utility does not detect the camera, click **Refresh** to restart the device collection.

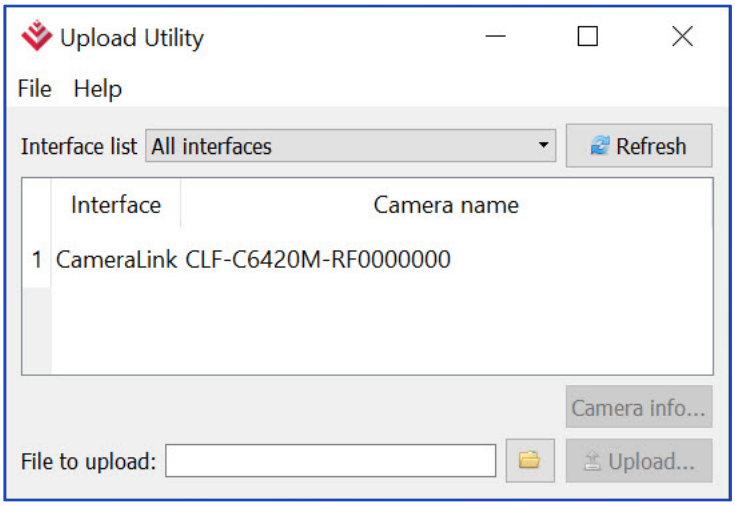


3. Select the camera, click , browse the .hpm file, select it, and click **Upload**.
   Wait for the upload to finish

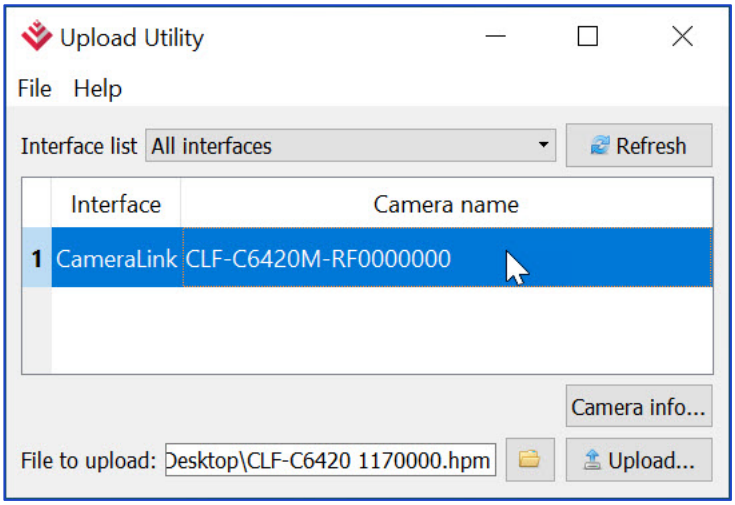

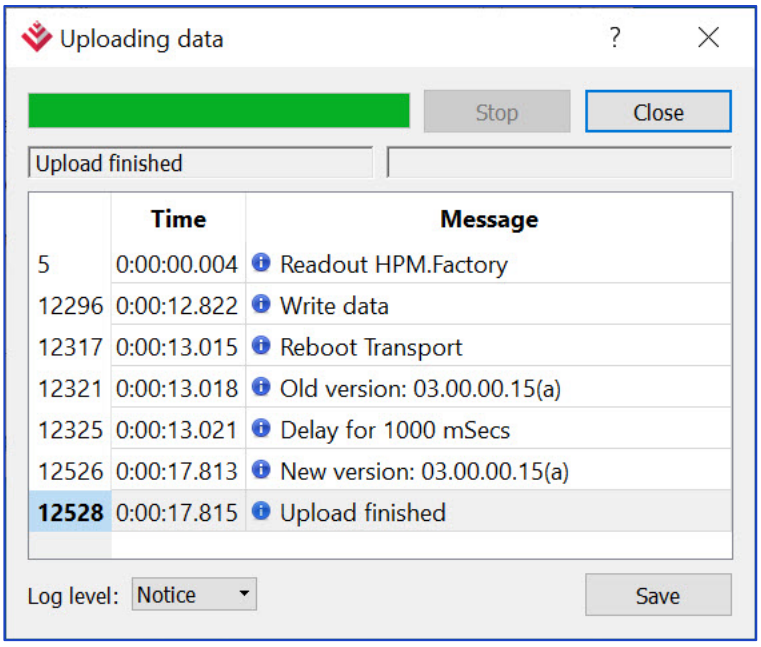


4. Power cycle the camera.

5. Run **CamConfig** and open **Image Control** panel.

6. Make sure that *Bad Pixel Correction* is set to **User** so that the camera uses the maps you loaded.

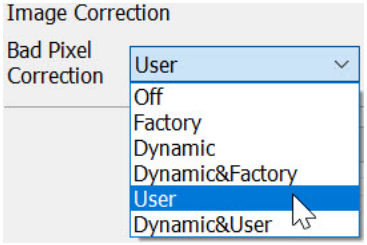


7. Retake images as described in the Finding Hot Pixels section to ensure all defective and hot pixels are now corrected.

# Appendix C: Look Up Tables

## Creating an LUT Using a Text Editor

You can use any ASCII text editor, such as Notepad or similar, to create a custom LUT. Alternatively, any spreadsheet program (i.e. Microsoft Excel) can be used by converting the spreadsheet into a comma delimited (.csv) file. In either case, rename the file to include the .lut file extension.

The .lut file has two main sections: a header and a table. The header section is a free text area of up to 256 ASCII characters. Each line of the header section must be terminated in a comma. The table section of the file contains an array of 4096 lines with each line containing an input value followed by a comma and an output value. The input values represent incoming pixels and the output values represent what each incoming pixel should be converted into as an output pixel.

The format of the .lut file is as follows:

```
-- Look Up Table input file example,
-- lines beginning with two dashes are comments,
-- and are ignored by parser,
:Header,
-- this is the text that will get displayed with a 'glh' command,
Function is 'Negative Image',
Created by John Doe,
Date 5/28/20,
:Table,
-- input output,
      0,4095
      1,4094
      2,4093
      3,4092
      4,4091
      :
   4095,0
```

# Creating an LUT Using Microsoft Excel

The LUT file can be created in Excel as follows:

1. Create the spreadsheet as shown below (note that 4096 rows are required in the table).
2. Add the necessary equations into the output cells to generate the transfer function required.
3. Save the file as a .csv (comma delimited format).
4. Rename the .csv file to an extension of .lut.

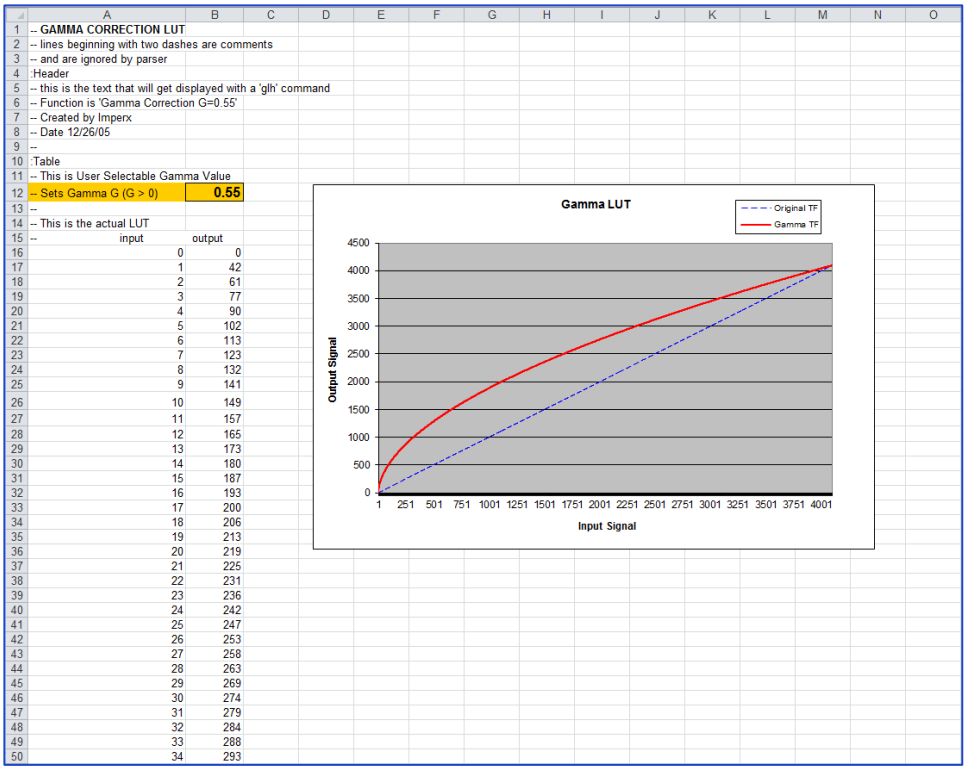

| | A | B |
|---|---|---|
| 1 | -- GAMMA CORRECTION LUT | |
| 2 | -- lines beginning with two dashes are comments | |
| 3 | -- and are ignored by parser | |
| 4 | :Header | |
| 5 | -- this is the text that will get displayed with a 'glh' command | |
| 6 | -- Function is 'Gamma Correction G=0.55' | |
| 7 | -- Created by Imperx | |
| 8 | -- Date 12/26/05 | |
| 9 | -- | |
| 10 | :Table | |
| 11 | -- This is User Selectable Gamma Value | |
| 12 | -- Sets Gamma G (G > 0) | 0.55 |
| 13 | -- | |
| 14 | -- This is the actual LUT | |
| 15 | -- input | output |
| 16 | 0 | 0 |
| 17 | 1 | 42 |
| 18 | 2 | 61 |
| 19 | 3 | 77 |
| 20 | 4 | 90 |
| 21 | 5 | 102 |
| 22 | 6 | 113 |
| 23 | 7 | 123 |
| 24 | 8 | 132 |
| 25 | 9 | 141 |
| 26 | 10 | 149 |
| 27 | 11 | 157 |
| 28 | 12 | 165 |
| 29 | 13 | 173 |
| 30 | 14 | 180 |
| 31 | 15 | 187 |
| 32 | 16 | 193 |
| 33 | 17 | 200 |
| 34 | 18 | 206 |
| 35 | 19 | 213 |
| 36 | 20 | 219 |
| 37 | 21 | 225 |
| 38 | 22 | 231 |
| 39 | 23 | 236 |
| 40 | 24 | 242 |
| 41 | 25 | 247 |
| 42 | 26 | 253 |
| 43 | 27 | 258 |
| 44 | 28 | 263 |
| 45 | 29 | 269 |
| 46 | 30 | 274 |
| 47 | 31 | 279 |
| 48 | 32 | 284 |
| 49 | 33 | 288 |
| 50 | 34 | 293 |

# Creating an LUT Using Imperx Toolkit

1. On the Tools tab, open LUT Manager utility.

2. Create a new LUT file. On the Create LUT dialog box, select the LUT type, set the input and output bit depth to 12, and click **OK**.

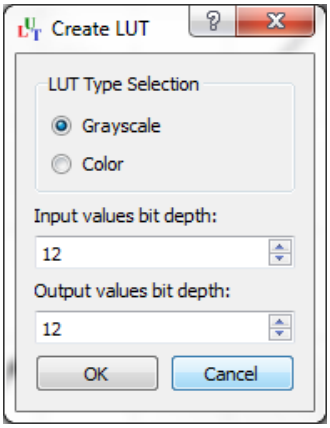


3. Click **Customize** under the LUT plot.

4. Click **More**, set **Curve type** to Dots and **Formula** to User.

5. Type in a formula for the new LUT.
The following operands and operations are available:

| Operation | Description |
|---|---|
| + | Addition |
| - | Substraction |
| * | Multiplication |
| / | Division |
| ^ | Raise to the power of |
| cos() | Cosine function |
| sin() | Sine function |
| tan() | Tangent function |
| acos() | Arc-Cosine function |
| asin() | Arc-Sine function |
| atan() | Arc-Tangent function |
| sqrt() | Square root |
| ln() | Log natural |
| exp() | Exponent |

| Operator | Description |
|---|---|
| x | x-value |
| pi | Mathematical constant approximately 3.1415926535897932 |

6. For a color camera, you can set a transfer function for each channel. Use R, G, and B tabs on the left to switch between the channels.

7. To save the LUT file, go to **File > Save as….**

**Example**
A modified sigmoid function can be used to enhance low contrast images. The modified sigmoid function is given below:

$$F(x) = \frac{1}{1 + e^{-a(x-b)}}$$

where **x** is the input pixel value.

**a** is a contrast factor. It determines the steepness of the curve (0.5 – low gain; 10 -high gain).

**b** is a threshold level. It determines a sigmoid's midpoint. A midpoint is the brightness of input pixels that is used as a reference. If the brightness of an input pixel is higher than a midpoint, the output pixel value is increased. Otherwise, the output pixel value is decreased.

In the LUT Manager window, type in the following formula under the *Formula* control (with a=4 and b=2):

**4095*(1/(1+(exp(-4*(x/(4095/4)-2)))))**

The function is scaled so that the input and output pixel values are within the range from 0 to 4095 (for a 12-bit image).

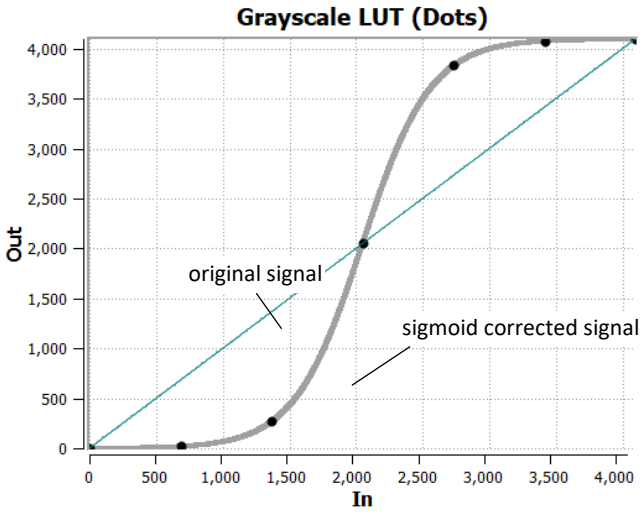


To adjust the overall brightness and contrast of the image, use both threshold and contrast factor parameters. The threshold value controls the amount of brightness, and the contrast factor controls the difference between pixels.

The sigmoid curves with varied threshold and contrast factor parameters are shown below:

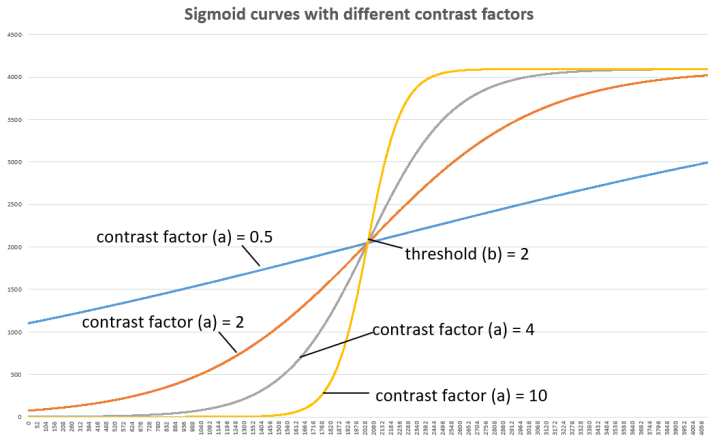


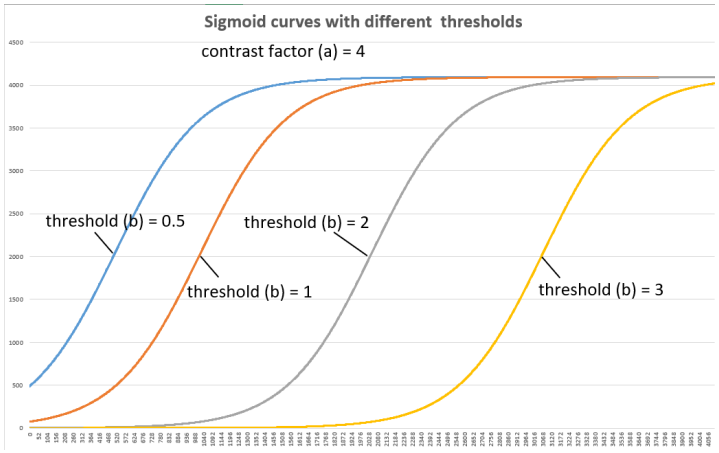


To apply a convex part of the curve within the range from 0 to 4095, use the following formula:

**2*4095*(1/(1+(exp(-2*(x/(4095/4)))))-0.5)**

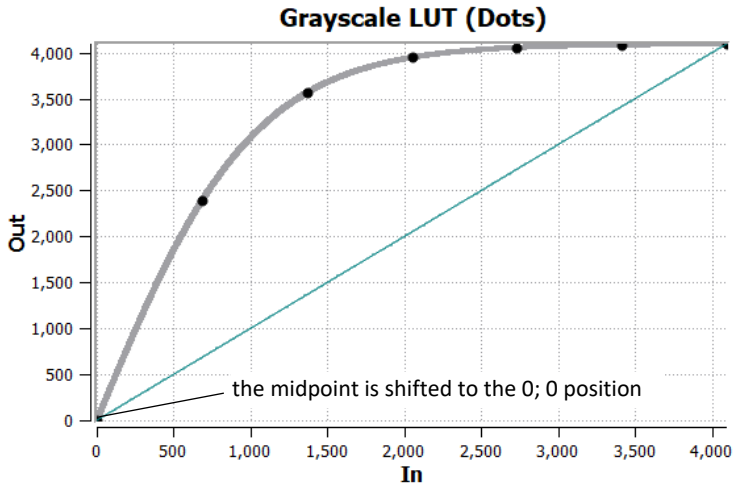


To apply a concave part of the curve within the range from 0 to 4095, use the following formula:

**2*4095*(1/(1+(exp(-2*(x/(4095/4)-4)))))**

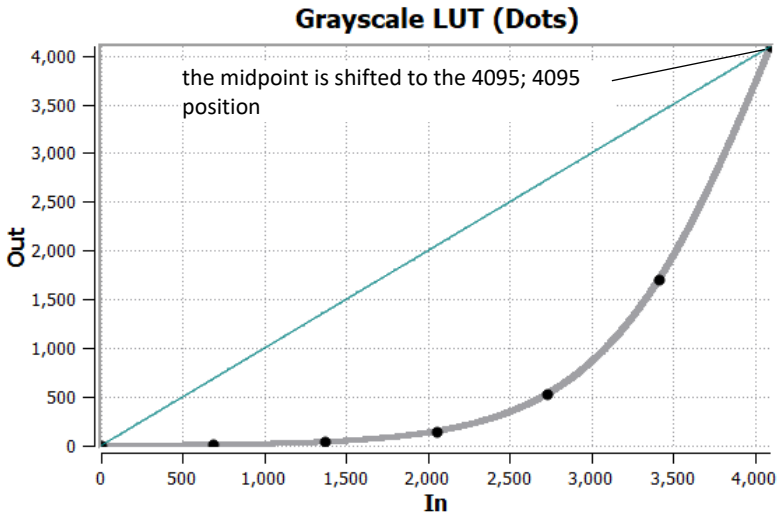

# Uploading the LUT File

After saving the LUT into the .lut file, you can upload it into the camera using **Download Terminal** from the main Menu.

Alternatively, you can use Imperx **Upload Utility**. The Upload Utility enables uploads of HPM, LUT, and other files to your camera.

**To upload the LUT file:**

1. Connect and power up your camera.

2. Start the Imperx **Upload Utility** and wait for the Utility to detect the camera.
   If the utility does not detect the camera, click **Refresh** to restart the device collection.

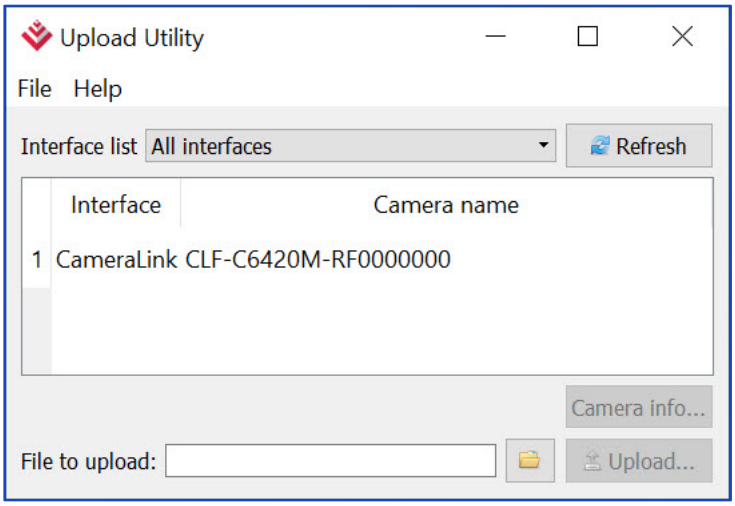


3. Select the camera, click , browse to the .lut file, select it. and click **Upload**.

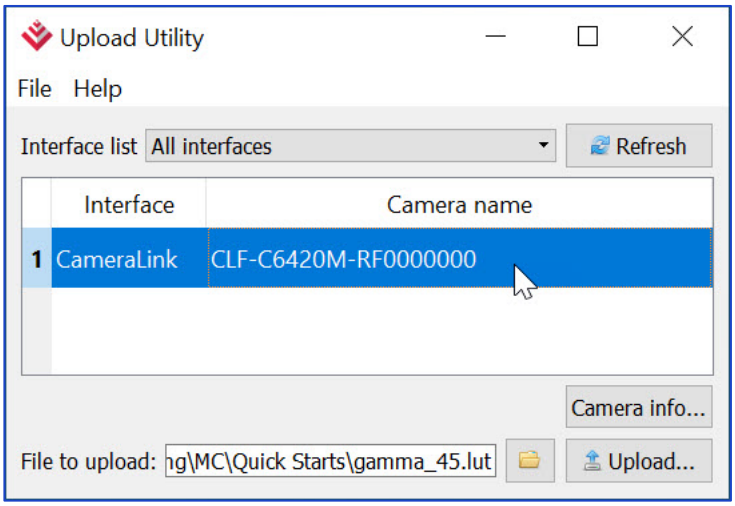

4. Select to which camera's User (User1–User4) to upload the .lut file you created and click **OK**. Wait for the upload to finish.

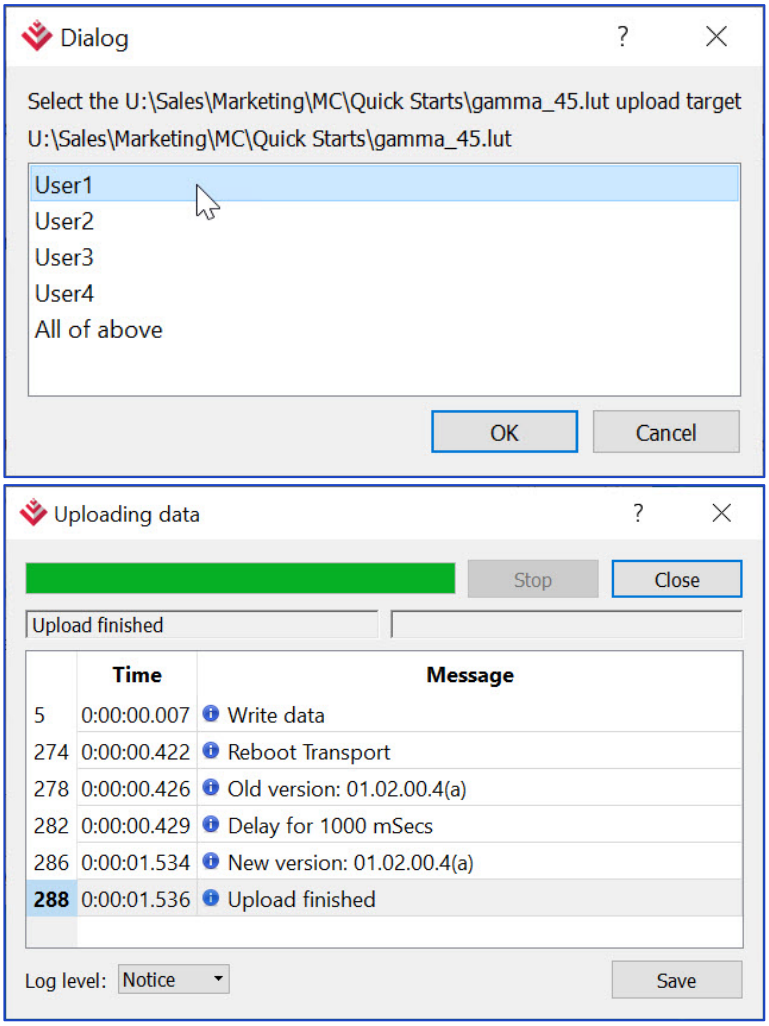


5. Power cycle the camera.

6. Start the CamConfig GUI and open the **Image Control** panel.

7. Set LUT to the LUT you uploaded (if you uploaded LUT into User1 then select LUT #1, for User2 – LUT #2, and so on).
The camera then uses the LUT you uploaded.

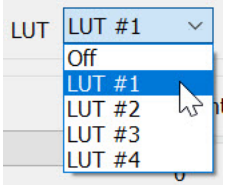

# Appendix D: Spectral Response

## Cheetah C1621 Spectral Response

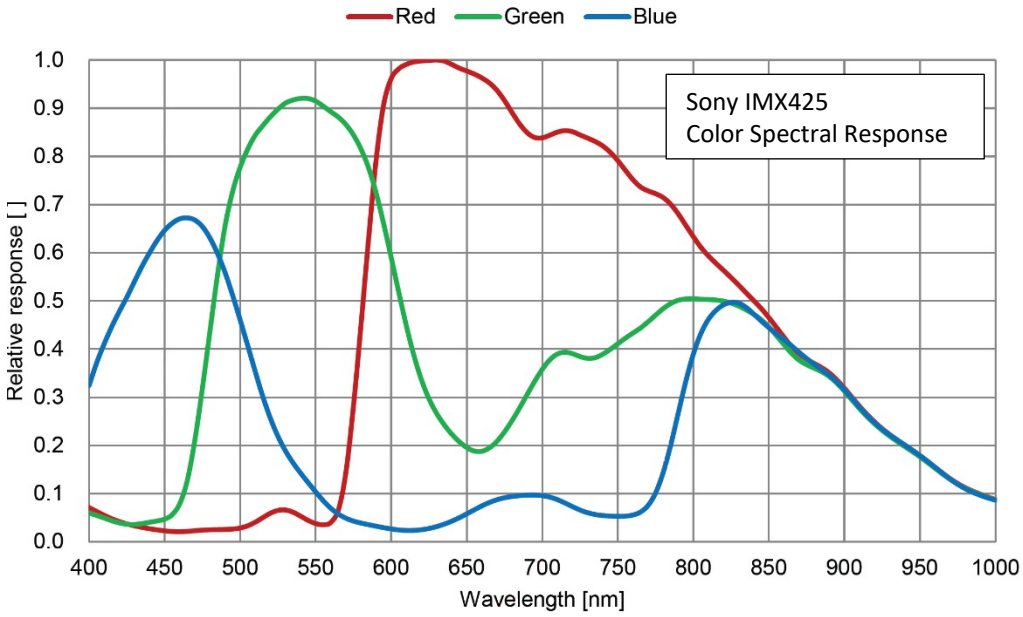


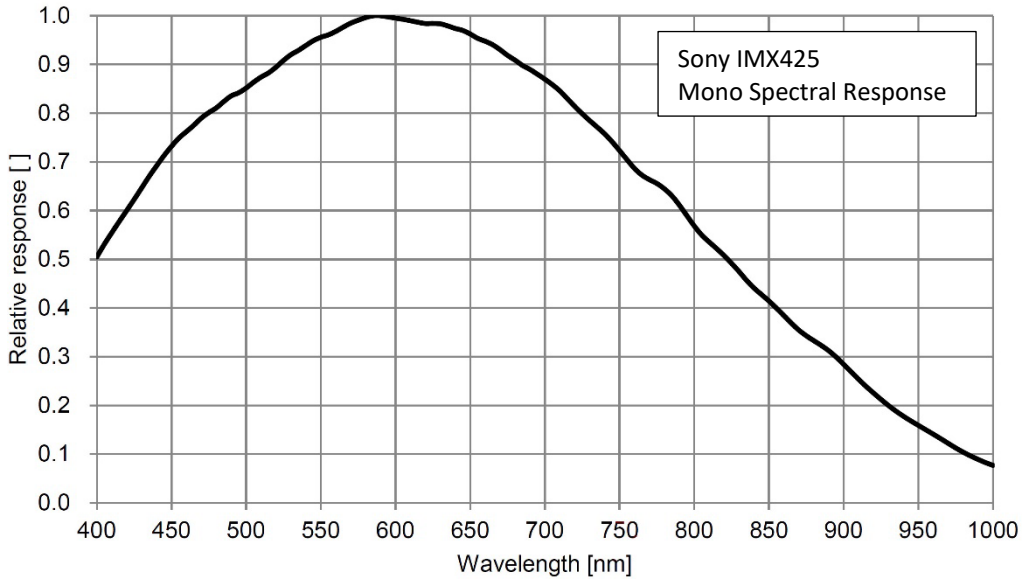

# Cheetah C1921 Spectral Response

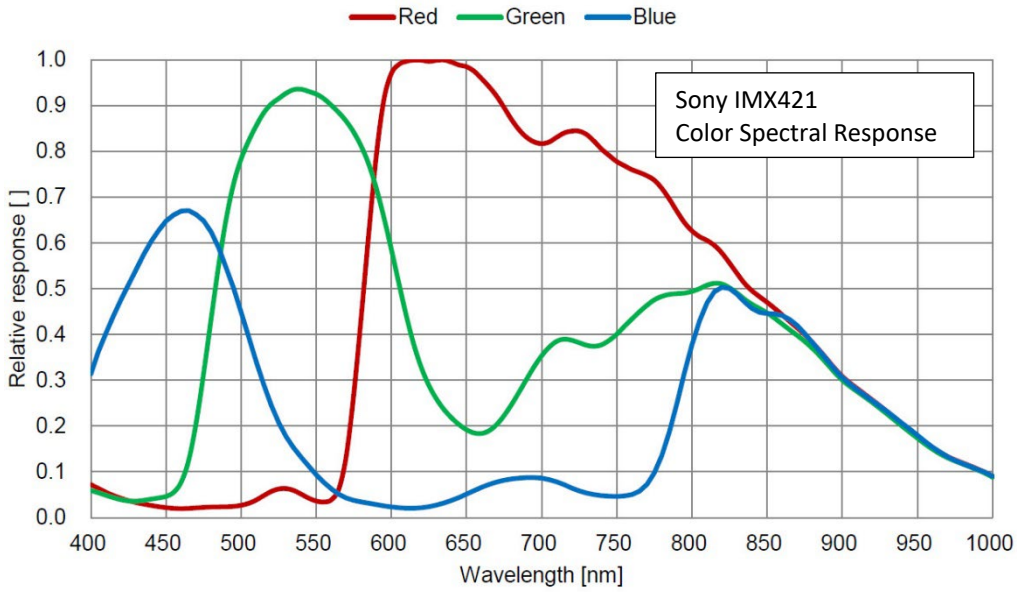


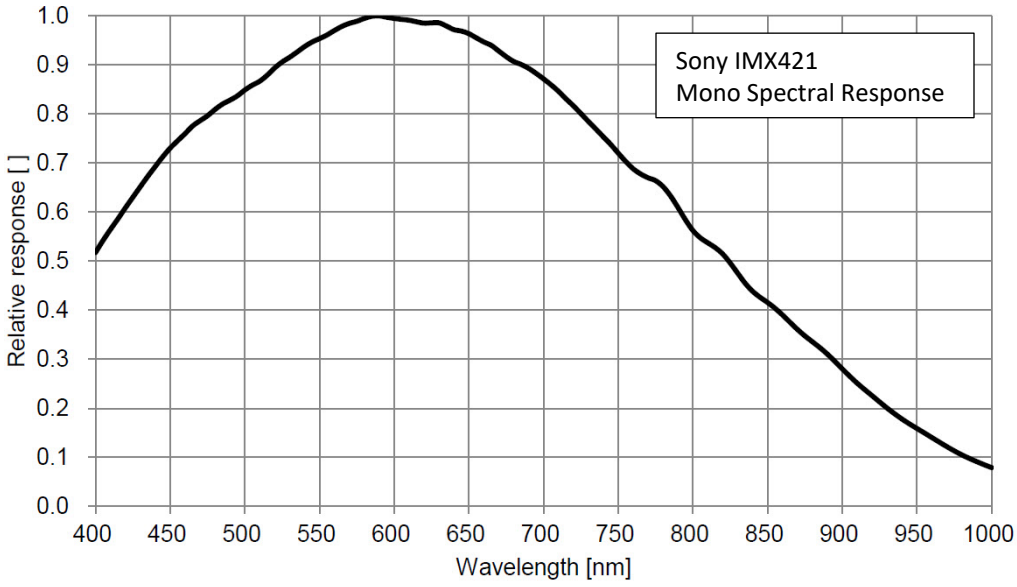

# Cheetah C2020 Spectral Response

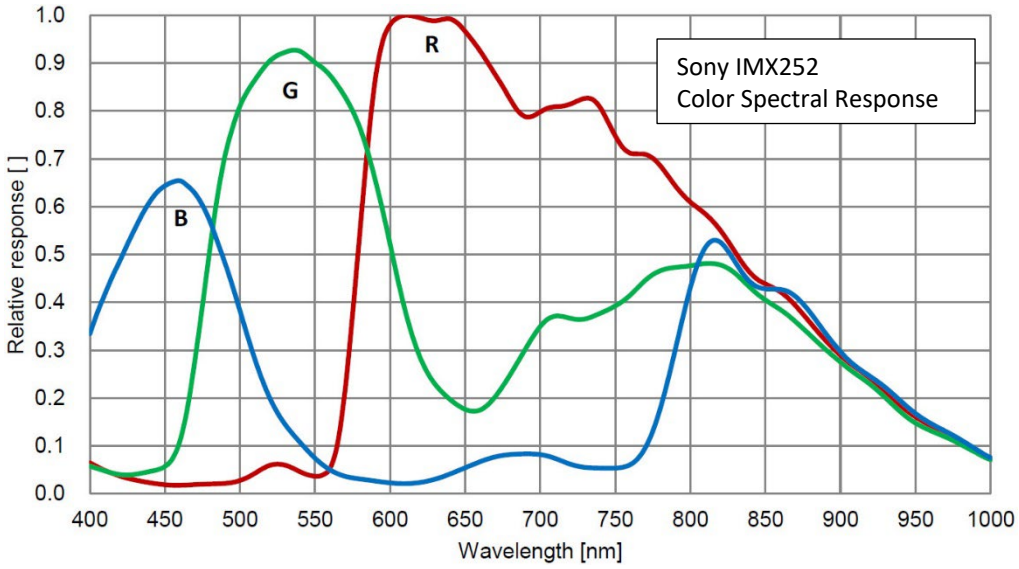


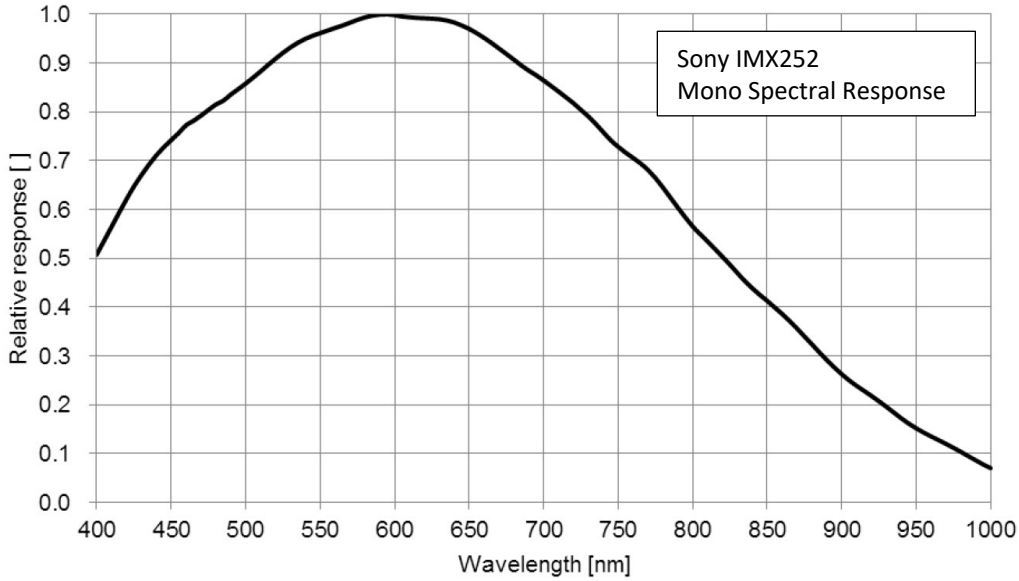

# Cheetah C2420 Spectral Response

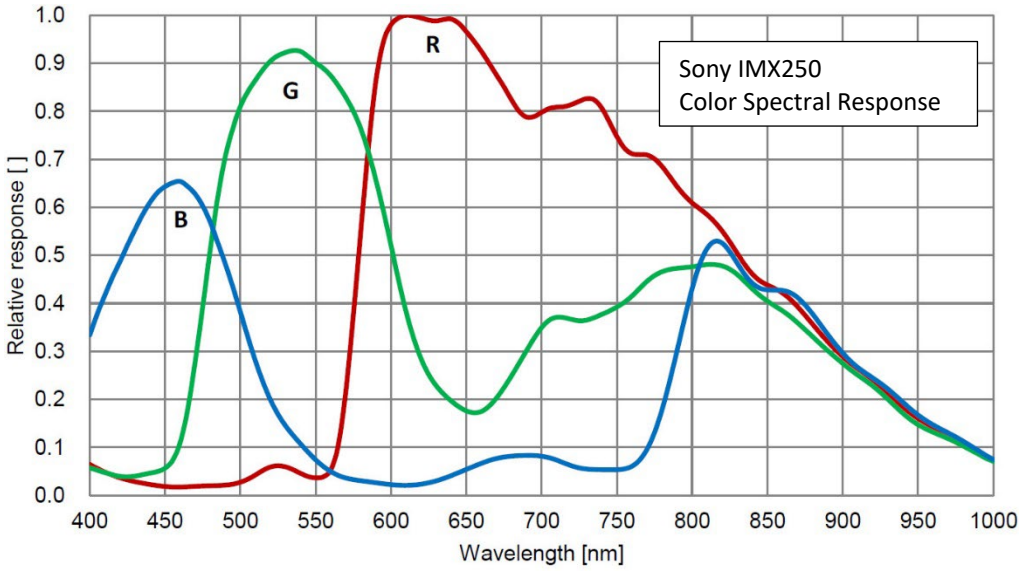


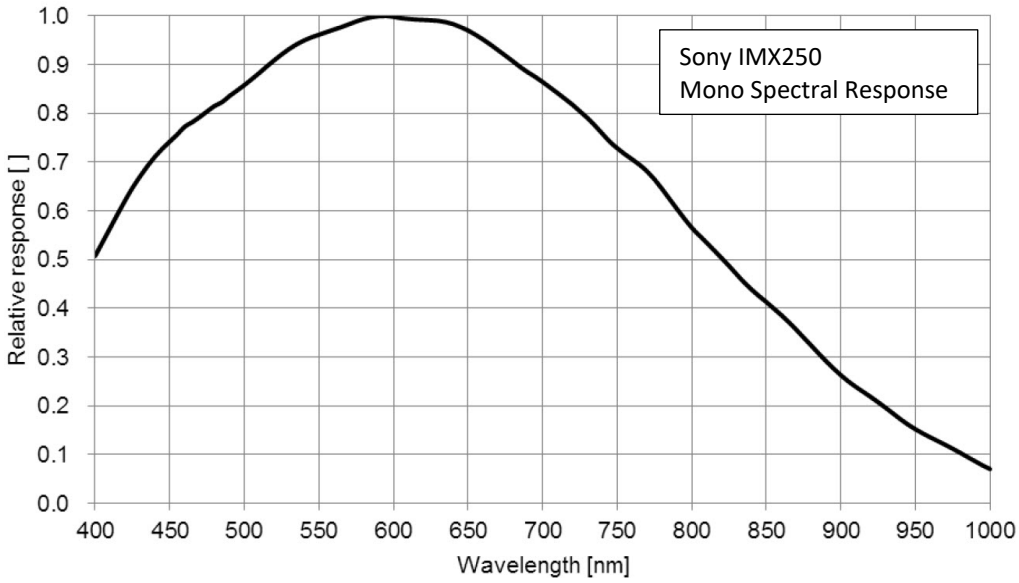

# Cheetah C2424YZ Spectral Response

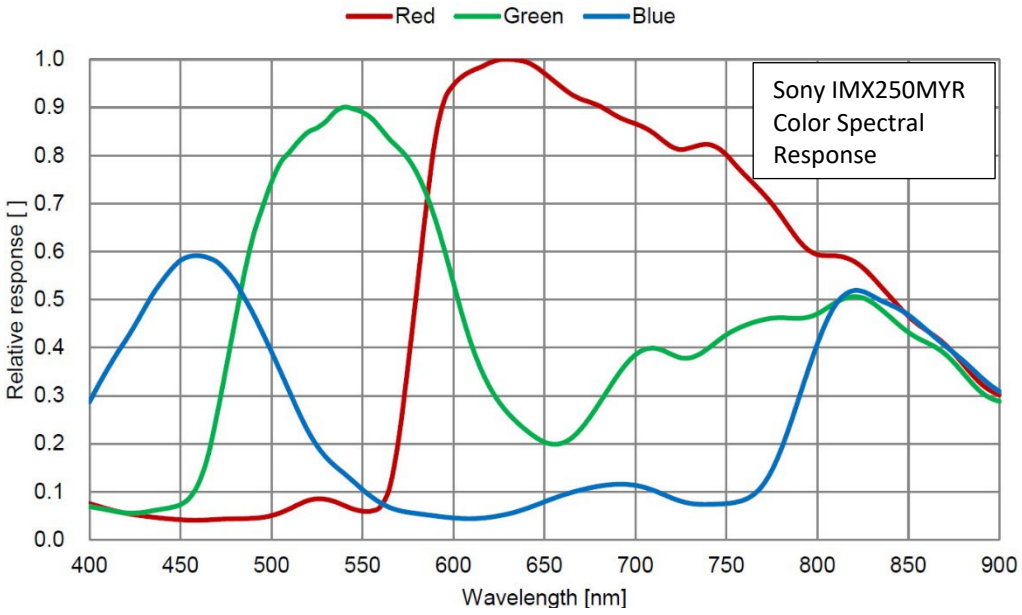


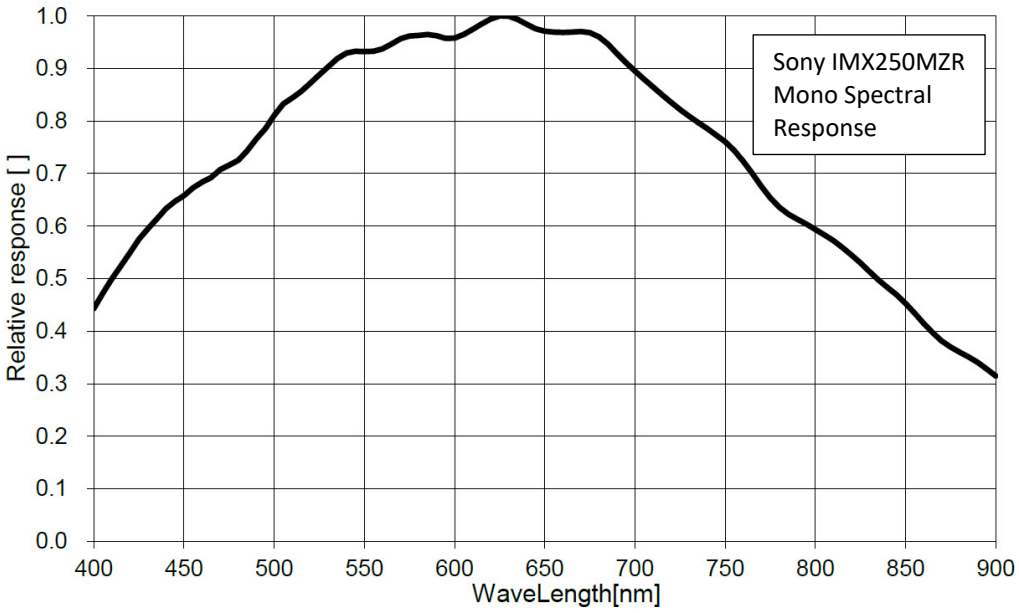

# Cheetah C2820 Spectral Sensitivity

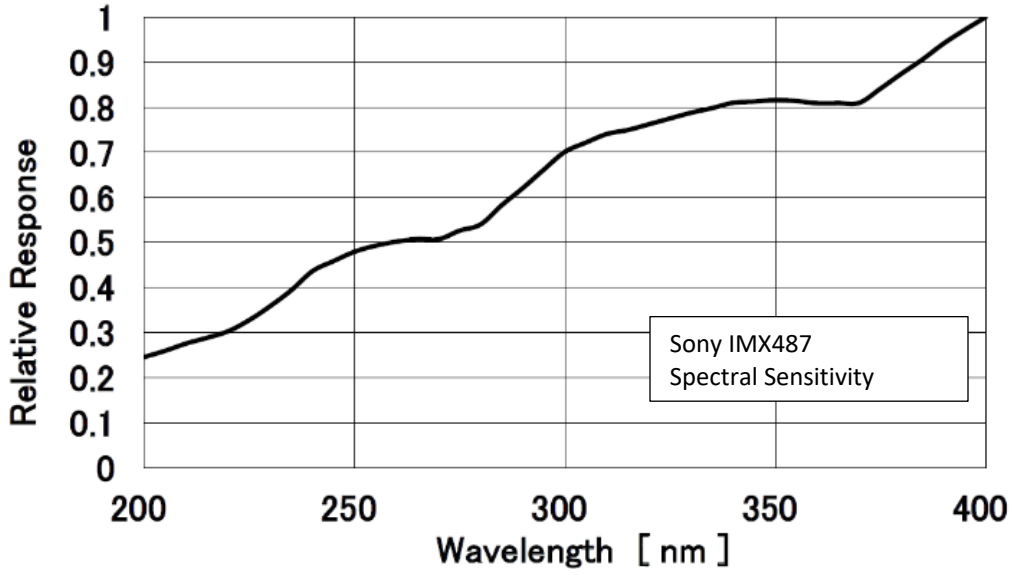

# Cheetah C3220 Spectral Response

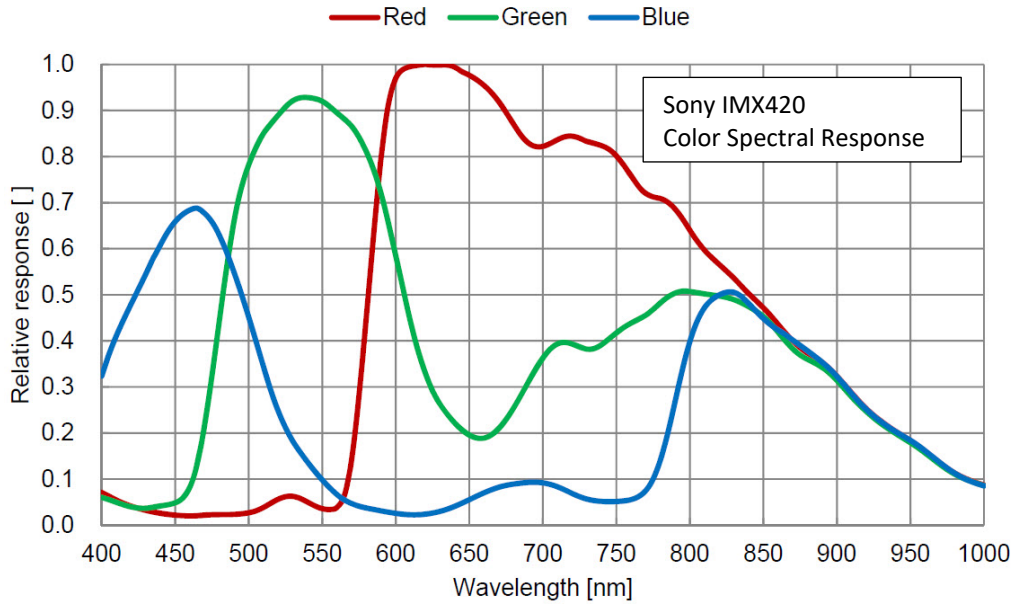


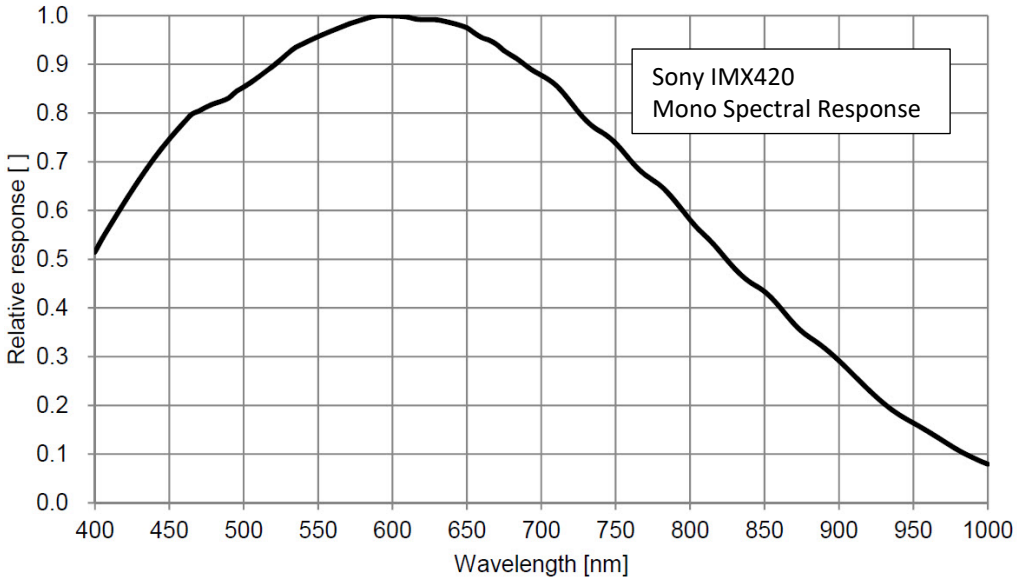

# Cheetah C4020 Spectral Response

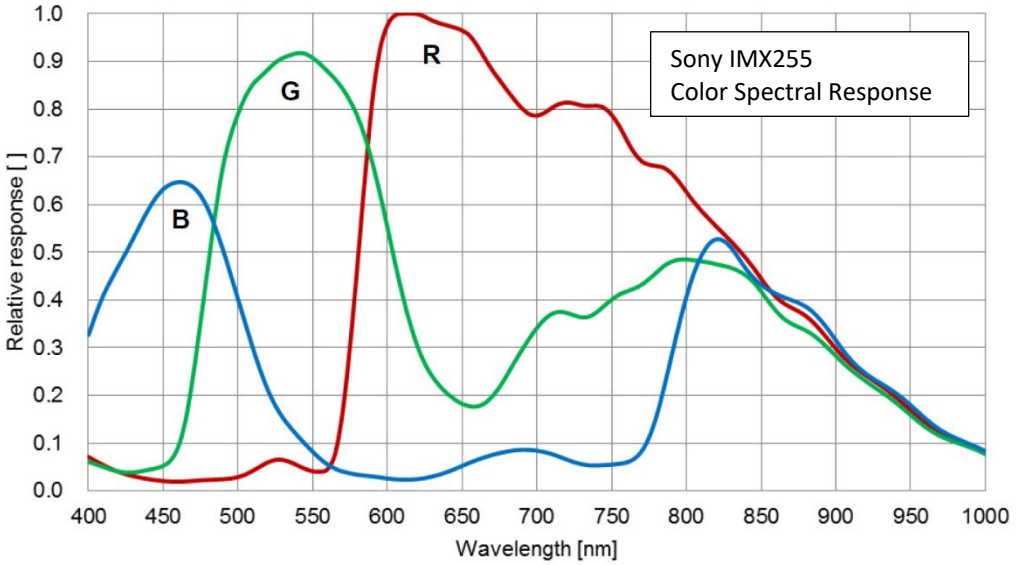


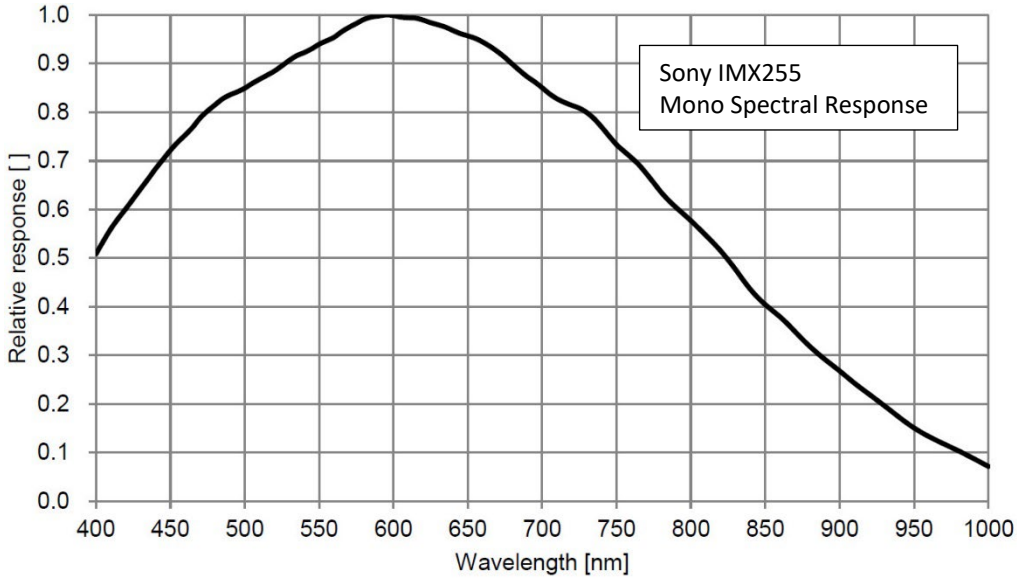

# Cheetah C4120 Spectral Response

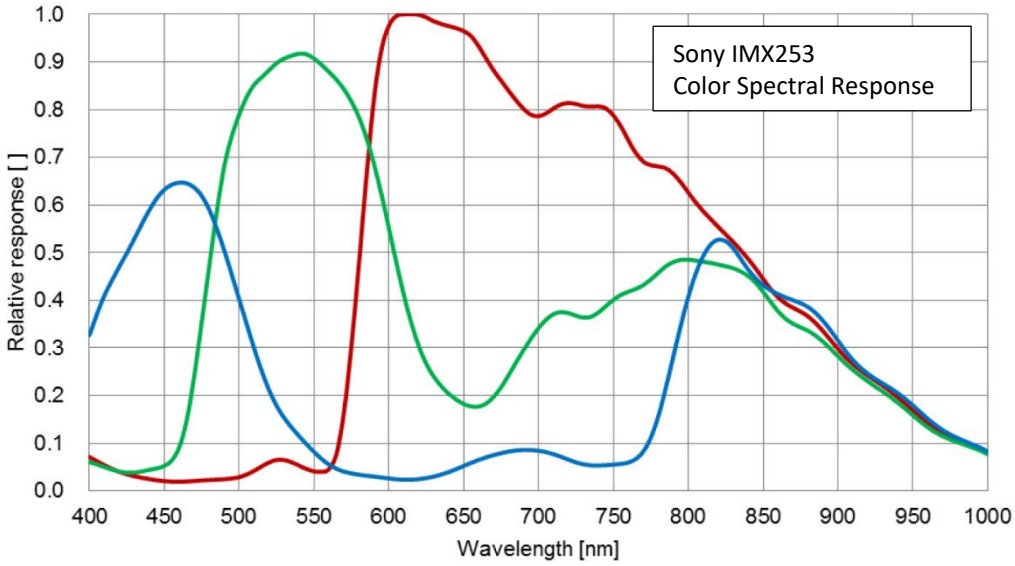


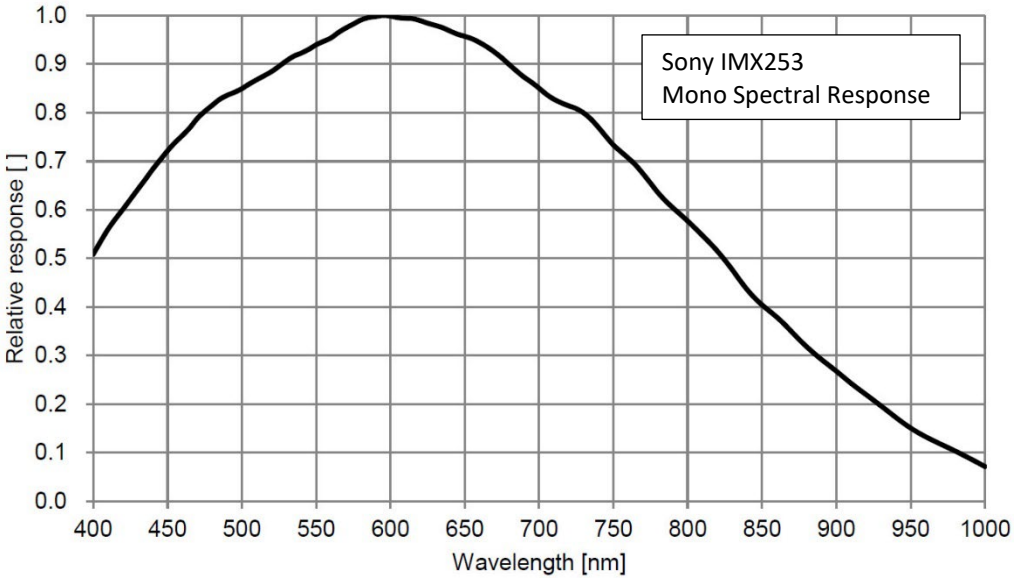

# Cheetah C4420 and C4420-T Spectral Response

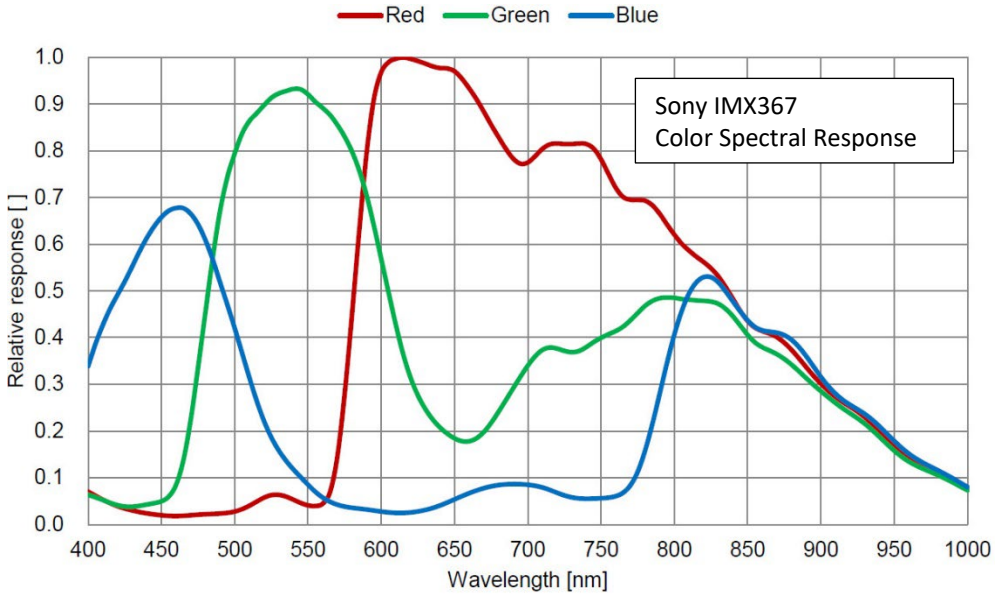


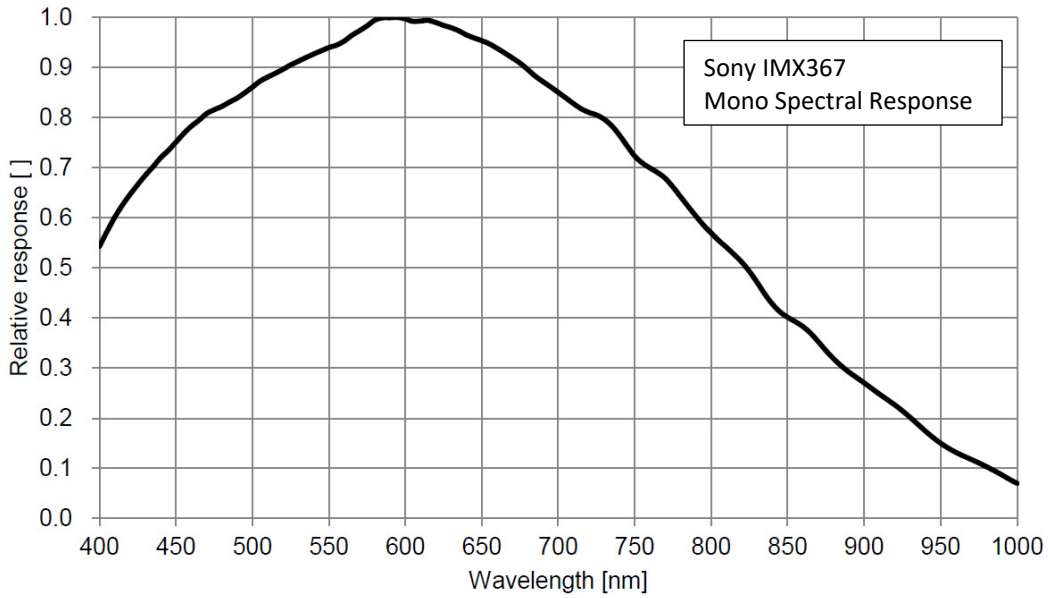

# Cheetah C4510 Spectral Response

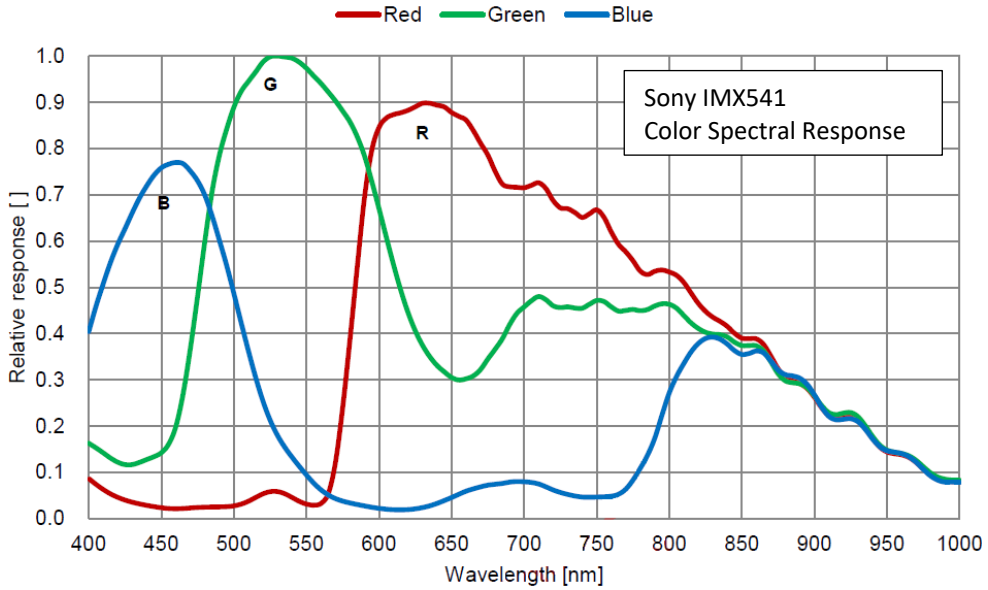


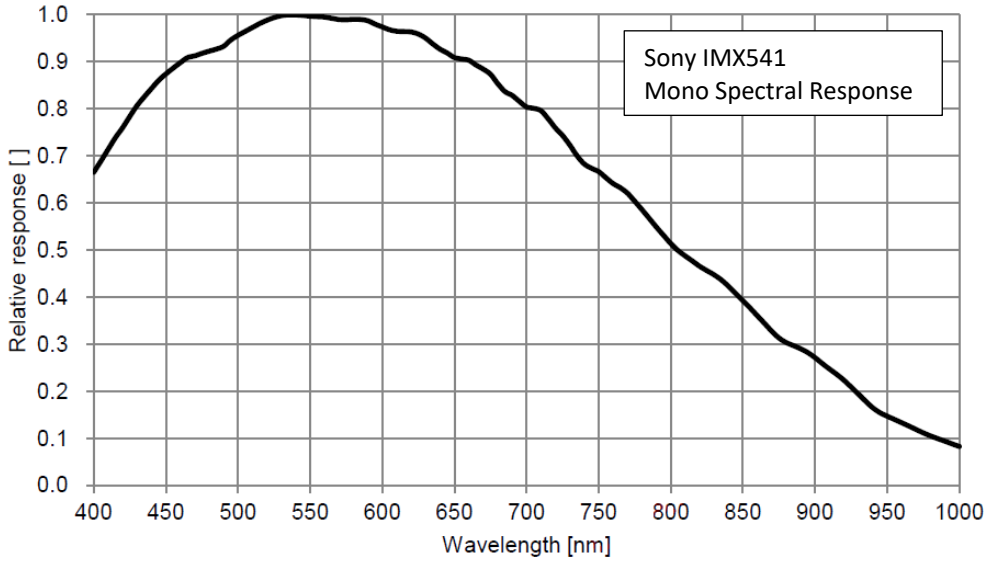

# Cheetah C5310 Spectral Response

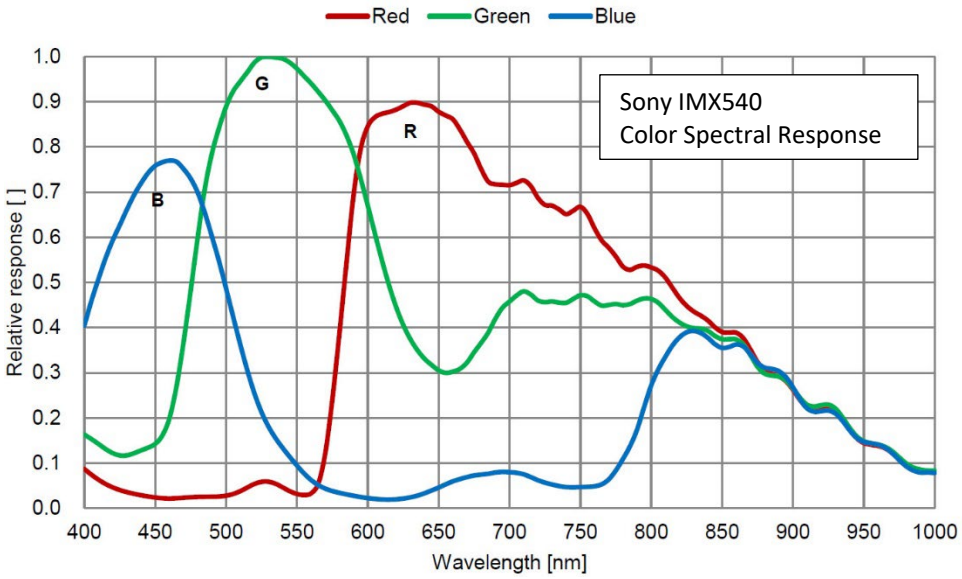


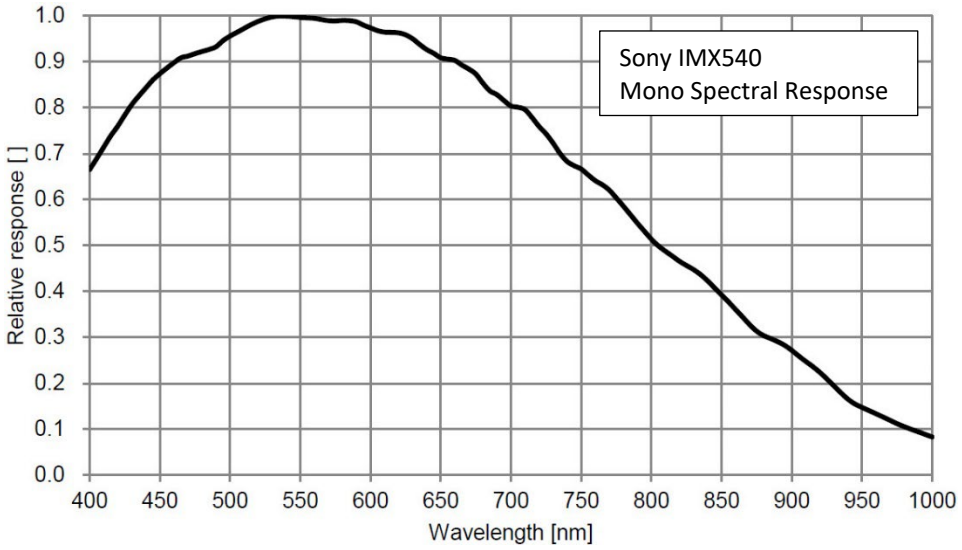

# Cheetah C5311 Spectral Response

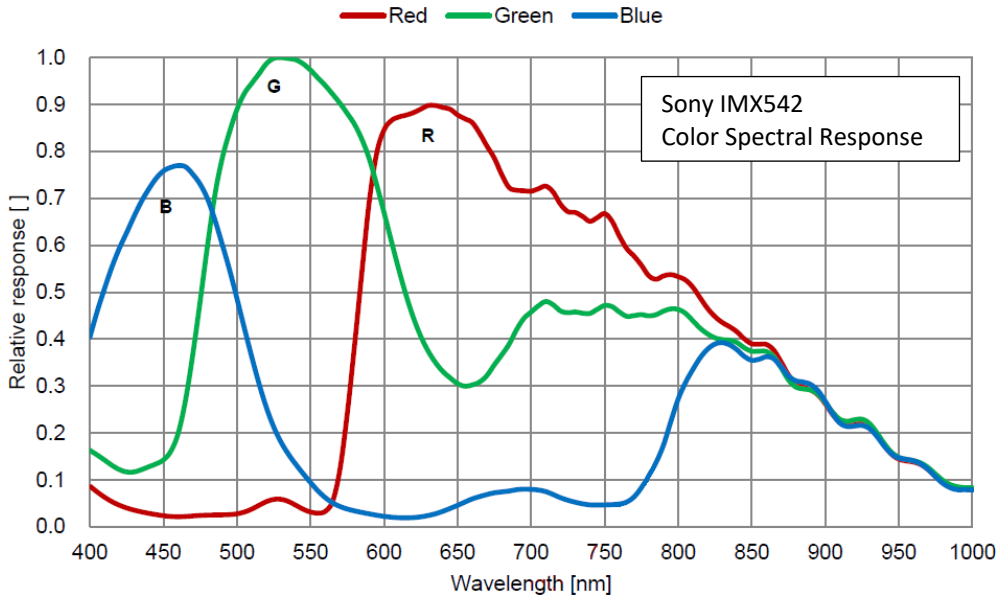


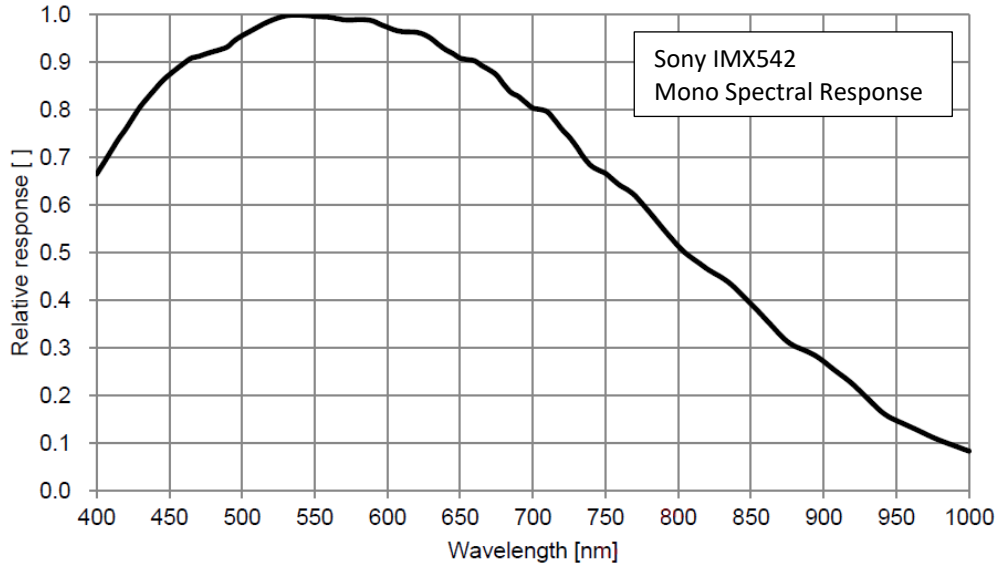

# Cheetah C5420 and C5420-T Spectral Response

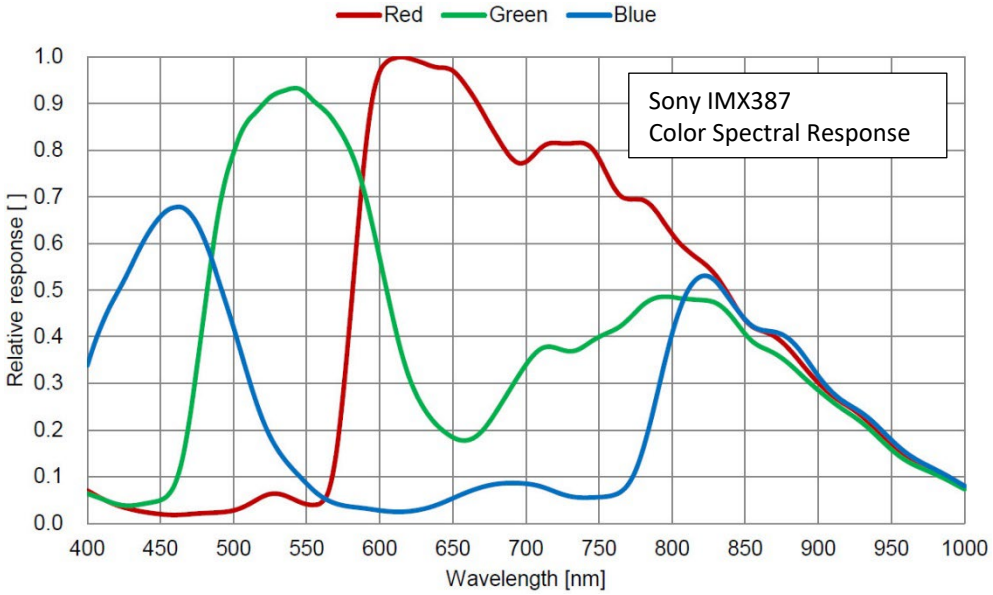


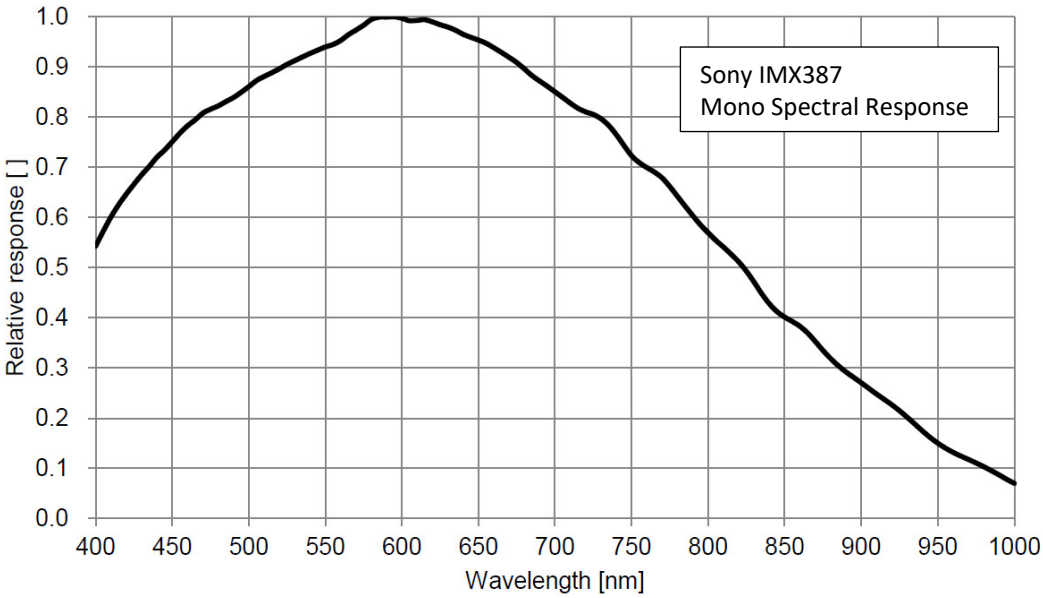

# Cheetah C6420 and C6420-T Spectral Response

