IMPERX



Tiger CCD Cameras

User Manual

With Camera Link® and CoaXPress

The Imperx Tiger series of cameras offer a range of CCD sensor formats capable of producing images up to 10480 x 4840 resolution. Combined with advanced processing technology, these cameras deliver finely detailed images suitable for a wide range of applications, including flat panel inspection, aerial mapping, electronics and PCB manufacturing, and more. Tiger cameras are made of precision-machined aluminum and industrial grade components.

Document Version 1.2

IMPERX™
Industrial Cameras & Imaging Systems

About Imperx, Inc.

IMPERX, Inc. is a leading designer and manufacturer of high performance, high quality digital cameras, frame grabbers, and accessories for industrial, commercial, defense, and aerospace imaging applications including flat panel inspection, biometrics, aerial mapping, surveillance, traffic management, semiconductors and electronics inspection, scientific & medical Imaging, printing, homeland security, space exploration, and other imaging and machine vision applications.

Fortune 100 companies, federal and state government agencies, domestic and foreign defense agencies, academic institutions, and other customers worldwide use IMPERX products.

Imperx, Inc. | 6421 Congress Ave. | Boca Raton, FL, 33487
US Phone: +1 (561) 989-0006

Warranty

IMPERX warrants performance of its products and related software to the specifications applicable at the time of sale in accordance with IMPERX's standard warranty, which is 2 (two) years parts and labor. FOR GLASSLESS CAMERAS, THE CCD OR CMOS IS NOT COVERED BY THE WARRANTY.

Do not open the housing of the camera. Warranty voids if the housing has been open or tampered.

IMPORTANT NOTICE
This camera has been tested and complies with the limits of Class A digital device, pursuant to part 15 of the FCC rules.

Copyright © 2017, 2019 IMPERX Inc. All rights reserved. All information provided in this manual is believed to be accurate and reliable. No responsibility is assumed by IMPERX for its use. IMPERX reserves the right to make changes to this information without notice. Redistribution of this manual in whole or in part, by any means, is prohibited without obtaining prior permission from IMPERX. IMPERX reserves the right to make changes to its products or to discontinue any product or service without notice and advises its customers to obtain the latest version of relevant information to verify, before placing orders, that the information being relied on is current.

IMPERX PRODUCTS ARE NOT DESIGNED, INTENDED, AUTHORIZED, OR WARRANTED TO BE SUITABLE FOR USE IN LIFE-SUPPORT APPLICATIONS, DEVICES OR SYSTEMS OR OTHER CRITICAL APPLICATIONS, WHERE MALFUNCTION OF THESE PRODUCTS CAN REASONABLY BE EXPECTED TO RESULT IN PERSONAL INJURY. IMPERX CUSTOMERS USING OR SELLING THESE PRODUCTS FOR USE IN SUCH APPLICATIONS DO SO AT THEIR OWN RISK AND AGREE TO FULLY INDEMNIFY IMPERX FOR ANY DAMAGES RESULTING FROM SUCH IMPROPER USE OR SALE.

TABLE OF CONTENTS

1 About Tiger Series Cameras 11
1.1 General Overview 11
1.1.1 Camera Output Interface Options 12
1.1.2 Tiger Key Features 13
1.2 Industrial Versus Ruggedized Version Overviews 14
1.3 T9040 Technical Specifications 15
1.4 T8820 and T8810 Technical Specifications 17
1.5 T8040 Technical Specifications 19
1.6 T6640 / T6641 Technical Specifications 21
1.7 T4940 and T4840 Technical Specifications 23
1.8 T3640 and T3340 Technical Specifications 25
1.9 T2040 Technical Specifications 27
1.9 Active EF Mounts 28
1.9 Ordering Information 29

2 Hardware 30
2.1 Camera Link Camera Output 30
2.1.1 Camera Link Hirose Connector Pin Assignments 31
2.1.2 Camera Link Power Supply 33
2.1.3 Camera Link Cabling 33
2.1.4 Camera Link LED Status Indicators 34
2.2 CoaXPress (CXP) Camera Output 35
2.2.1 CXP Hirose Connector Pin Assignments 36
2.2.2 CXP Camera Power and Data 37
2.2.3 CoaXPress LED Status 37
2.3 I/O Electrical Connectivity 37
2.4 Mechanical Drawings 40
2.4.1 Large Tiger with Camera Link Output (Ruggedized and Industrial) 40
2.4.2 Small Tiger with Camera Link Output (Ruggedized) 41
2.4.3 Small Tiger with Camera Link Output / Forced Air Cooling (Industrial) 42
2.4.4 Small Tiger with CoaXPress Output (Ruggedized) 43
2.4.5 Small Tiger with CoaXPress Camera Output / Forced Air Cooling (Industrial) 44
2.4.6 T9040 Camera with Camera Link Output (Ruggedized) 45
2.4.7 T9040 Camera with Camera Link Output / Forced Air Cooling (Industrial) 46
2.4.8 T9040 Camera with CoaXPress Output (Ruggedized) 47
2.4.9 T9040 Camera with CoaXPress Output / Forced Air Cooling (Industrial) 48
2.5 Optical 49
2.6 Spectral Response 50
T9040 Camera QE 50
T8810/T8820 Camera QE 51
T8040 Camera QE 52
T6641 Camera QE 53
T6640 Camera QE 55
T4940 Camera QE 56
T4840 Camera QE 58
T3640 Camera QE 59
T3340 Camera QE 61

T2040 Camera QE 62
2.7 Environmental 64
2.8 Forced Air Cooling 65
2.8.1 DC Fan Dimensions 66
2.8.2 Replacing the Fan 68

3 Camera Link Configuration 70
3.1 Overview 70
3.2 Installing Camera Link Configurator Software 70
3.3 Starting CamConfig 73
3.4 Main Window 75
3.4.1 Camera Configuration Memory 75
3.4.2 Menu Options 76
3.4.2.1 Run Application 77
3.4.2.2 Load From 77
3.4.2.3 Save To 77
3.4.2.4 Boot From 77
3.4.2.5 BPM Dialog 77
3.4.2.6 Command Terminal 79
3.4.2.7 Download Terminal 80
3.4.2.8 Connection 80
3.4.3 View Options 81
3.4.4 Help Menu 82
3.5 Camera Link Configuration Screens 82
3.6 Gain & Offset Control 82
3.7 Output Control 83
3.7.1 Output Mapping 84
3.7.1.1 Output Signals for both Industrial and Ruggedized Cameras 84
3.7.1.2 Output Signals for Ruggedized Cameras only 84
3.7.2 Strobe Settings 85
3.7.2.1 Strobe Position and Duration 85
3.7.3 Internal Pulse Generator 85
3.8 Acquisition Control 86
3.8.1 Trigger Options 86
3.8.2 Trigger Strobe Options 88
3.8.3 Exposure Options 88
3.9 AEC/AGC Control 89
3.10 Image Parameters 90
3.10.1 Binning 91
3.10.2 Area of Interest (AOI) 91
3.10.2.1 Ruggedized Cameras – Master AOI/Slave AOI 91
3.10.2.2 Industrial Camera AOI 92
3.10.3 Image Structure 93
3.10.4 Image Corrections 93
3.10.5 Test 95
3.11 White Balance Color Control 96
3.12 Temperature Control 97
3.13 Canon Lens Control 98

4 CXP Camera Configuration 99
4.1 GenICam Camera Configuration 99
4.2 XML Parameters 99
4.2.1 Device Control 100
4.2.2 Version Info 101
Version Info_CXP Support 102
4.2.3 Image Format Control 103
Image Format_Slave AOI 105
4.2.4 Acquisition Control 107
4.2.5 Gain and Offset 109
4.2.6 Auto Gain and Auto Exposure 111
Auto Gain and Auto Exposure_Control 111
Auto Gain and Auto Exposure_Status 112
4.2.7 Data Correction 113
4.2.8 White Balance 115
4.2.9 Strobe 116
Strobe_OUT1 117
Strobe_OUT2 117
4.2.10 Pulse Generator 118
4.2.11 Canon Lens Control 120
Canon Lens Control_Controller Settings 120
Canon Lens Control_Focus 121
Canon Lens Control_Iris 122
Canon Lens Control_Iris 122
4.2.12 Wide Dynamic Range (WDR) 123
4.2.13 Temperature Control 124
4.2.14 Transport Layer Control 125
Transport Layer Control_CoaXPress 126
4.2.15 User Set Control 129
4.2.16 Special Features 130

5 Camera Features 131
5.1 Bad Pixel Correction 131
5.2 FFC Correction 131
5.3 Digital Gain, Offset, and Shift 132
5.4 Area of Interest 132
5.5 Look-up Table 132
5.6 White Balance 132
5.7 Automatic Gain and Exposure Control 132
5.8 Configurable Bit Depth 132
5.9 ESD Event Protection 133

6 Technical Support 134

Appendix A – Creating LUT Tables 135
A.1 Creating LUT Tables 135
A.1.1 Using an ASCII Text Editor 135
A.1.2 Using Microsoft Excel 136
A.2 Creating Corrective Maps 136

Appendix B – Camera Registers 138
B.1 Camera RGS Space Structure 138
B.1.1 Camera Local Space 138
Saving and Restoring Settings 138
Camera Information Registers 139
Miscellaneous 140
EOS Lens Control Information Registers 140
B.1.2 Camera Information 141
Firmware Information 142
B.1.3 Parameter Registers 142
Image Size (AOI) Registers 142
Exposure Control Registers 143
AEC, AGC Workspace Registers 144
Gain and Offset Workspace Registers 144
Triggering Registers 145
Pulse Generator Registers 147
Test Pattern Workspace Registers 147
Output Registers 148
Output Data Format 149
Color Registers 149
Data Correction Registers 150

FIGURES

Figure 1: The camera (left) and Canon EF lens mount (right) connect internally. 28
Figure 2: Back panel of the Tiger CLM T6640 camera. 30
Figure 3: Back panel of the Tiger CLF T8820 camera. 30
Figure 4: Connector Pin-outs. 31
Figure 5: PS12V04A power supply (ordered separately). 33
Figure 6: Back panel of Tiger CXP camera. 35
Figure 7: CXP camera Hirose connector pin-outs. 36
Figure 8: IN1 electrical connection. 37
Figure 9: IN2 electrical connection. 38
Figure 10: OUT1 LVTTL electrical connection. 38
Figure 11: Open drain logic driver. 38
Figure 12: Low side load driver. 39
Figure 13: High side load driver. 39
Figure 14: T9040 monochrome with micro lens. 50
Figure 15: T9040 color (Bayer RGB) with micro lens. 50
Figure 16: T8810/T8820 monochrome with micro lens. 51
Figure 17: T8810/T8820 color (Bayer RGB) with micro lens. 51
Figure 18: T8810/T8820 color (Truesense Sparse CFA) with micro lens. 52
Figure 19: T8840 monochrome with micro lens. 52
Figure 20: T8040 color (Bayer RGB) with micro lens. 53
Figure 21: T6641 monochrome with micro lens. 53
Figure 22: T6641 color (Bayer RGB) with micro lens. 54
Figure 23: T6641 color (Truesense Sparse CFA) with micro lens. 54
Figure 24: T6640 monochrome with micro lens. 55

Figure 25: T6640 color (Bayer RGB) with micro lens. 55
Figure 26: T6640 color (Truesense Sparse CFA) with micro lens 56
Figure 27: T4940 monochrome with micro lens. 56
Figure 28: T4940 color (Bayer RGB) with micro lens. 57
Figure 29: T4940 color (Truesense Sparse CFA) with micro lens 57
Figure 30: T4840 monochrome with microlens. 58
Figure 31: T4840 color (Bayer RGB) with micro lens. 58
Figure 32: T4840 color (Truesense Sparse CFA) with micro lens 59
Figure 33: T3640 monochrome with micro lens. 59
Figure 34: T3640 color (Bayer RGB) with micro lens. 60
Figure 35: T3640 color (Truesense Sparse CFA) with micro lens 60
Figure 36: T3340 monochrome with micro lens. 61
Figure 37: T3340 color (Bayer RGB) with micro lens. 61
Figure 38: T3340 color (Truesense Sparse CFA) with micro lens 62
Figure 39: T2040 monochrome with micro lens. 62
Figure 40: T2040 color (Bayer RGB) with micro lens. 63
Figure 41: T2040 color (Truesense Sparse CFA) with micro lens 63
Figure 42: An optional fan attaches to the top of the small body Tiger camera. 65
Figure 43: DC fan dimensions, overhead view. 66
Figure 44: DC fan dimensions, profile view. 67
Figure 45: T6640 camera with optional fan. 68
Figure 46: Unplug existing fan connector 68
Figure 47: Attach fan connector to controller board. 69
Figure 48: Securing fan to camera. 69
Figure 49: The installer helps you to remove existing copies. 70
Figure 50: Select Port screen. 74
Figure 51: CamConfig main window 75
Figure 52: Main window menu options. 76
Figure 53: Command Terminal. 79
Figure 54: Download Terminal. 80
Figure 55: Connection options and settings. 80
Figure 56: The Gain & Offset screen provides analog and digital gain. 82
Figure 57: Output Control screen. 83
Figure 58: Strobe settings 85
Figure 59: Internal Pulse Generator settings 85
Figure 60: Acquisition Control screen. 86
Figure 61: Acquisition exposure options. 88
Figure 62: AEC/AGC Control screen. 89
Figure 63: Image Parameters screen. 90
Figure 64: Master AOI and Slave AOI settings. 91
Figure 65: Industrial camera AOI. 92
Figure 66: Image structure settings 93
Figure 67: Image correction settings. 93
Figure 68: Image test settings. 95
Figure 69: Color screen. 96
Figure 70: Temperature control. 97
Figure 71: Lens control screen. 98
Figure 72: Device Control screen example. 100
Figure 73: Version Info screen example. 101

Figure 74: Image Format Control screen example. 103
Figure 75: Acquisition Control screen example. 107
Figure 76: Gain and Offset screen example. 109
Figure 77: Auto Gain and Auto Exposure screen example. 111
Figure 78: Data Correction screen example. 113
Figure 79: White Balance screen example. 115
Figure 80: Strobe screen example. 116
Figure 81: Pulse Generator screen example. 118
Figure 82: Canon Lens Control screen example. 120
Figure 83: Wide Dynamic Range screen example. 123
Figure 84: Temperature Control screen example. 124
Figure 85: Transport Layer Control screen example. 125
Figure 86: User Set Control screen example. 129
Figure 87: Special Features screen example. 130
Figure 88: ESD protection warning. 133
Figure 89: Alternating test patterns appear when an ESD event occurs 133
Figure 90: LUT example. 136

TABLES

Table 1: Tiger family megapixel cameras. 12
Table 2: Industrial vs. Ruggedized camera versions. 14
Table 3: T9040 technical specifications. 16
Table 4: T8820, T8810 technical specifications. 18
Table 5: T8040 technical specifications. 20
Table 6: T6640 / T6641 technical specifications 22
Table 7: T4940, T4840 technical specifications. 24
Table 8: T3640, T3340 technical specifications. 26
Table 9: T2040 technical specifications. 28
Table 10: Camera ordering information. 29
Table 11: Camera connectors and LED status indicator. 31
Table 12: Hirose connector pin assignments. 32
Table 13: LED colors indicate Camera Link camera status. 34
Table 14: Camera connectors and LED status indicator. 35
Table 15: Hirose connector pin assignments. 36
Table 16: LED colors indicate CXP camera status. 37
Table 17: Optical specifications. 49
Table 18: Menu option descriptions. 81
Table 19: Internal output signals for industrial and ruggedized cameras. 84
Table 20: Additional internal output signals available only for ruggedized cameras 84
Table 21: Slave AOI modes. 92
Table 22: Bit depth, bit shift, output format descriptions 93
Table 23: Image correction descriptions. 94
Table 24: Test modes. 95
Table 25: White balance presets. 96

REVISION HISTORY

Revision	Date	Reviser	Comments
1.0	11/27/2017	R. Johnston	Initial Camera Link release
1.1	8/9/2018	R. Johnston	Added CoaXPress (CXP) output interface and XML parameters; added Canon lens control; updated Camera Link GUI screens.
1.2	12/26/2019	I. Barabanova	Added T9040 camera Updated XML parameters

1 About Tiger Series Cameras

1.1 General Overview

The Tiger series of CCD cameras offer a range of image sensors with advanced processing technology to produce exceptional, high-resolution images with excellent quality, uniformity, and dynamic range. Tiger cameras use progressive scan technology to achieve smooth, realistic motion.

This manual covers the following Tiger cameras:

- **50-megapixel** T9040, frame rates up to 3.5 fps
- **47-megapixel** T8820, frame rates up to 6.7 fps.
- **47-megapixel** T8810, frame rates up to 3.3 fps.
- **43-megapixel** T8040, frame rates up to 3.8 fps
- **29-megapixel** T6641, frame rates up to 4.9 fps (with enhanced NIR).
- **29-megapixel** T6640, frame rates up to 4.9 fps.
- **16-megapixel** T4940, frame rates up to 8.8 fps.
- **16-megapixel** T4840, frame rates up to 7.9 fps.
- **8.6-megapixel** T3640, frame rate up to 15 fps.
- **8-megapixel** T3340, frame rates up to 21 fps.
- **4-megapixel** T2040, frame rates up to 34 fps.

Model	Resolution	Output Taps	Type	Image Area	Image Sensor / Manufacturer
T9040 – 50 MP	10480 × 4840	4	Mono/Color/ Sparse CFA	46.98 mm (H) × 21.60 mm (V)	KAI-50140, ON Semiconductor
T8820 – 47 MP	8880 × 5300	16	Mono/Color/ Sparse CFA	48.7 mm (H) × 29.0 mm (V)	KAI-47051, ON Semiconductor
T8810 – 47 MP	8880 × 5300	8	Mono/Color/ Sparse CFA	48.7 mm (H) × 29.0 mm (V)	KAI-47051, ON Semiconductor
T8040 – 43 MP	8064 x 5384	4	Mono/Color/ Sparse CFA	36.18 m (H) x 24.12 mm (V)	KAI-43140, ON Semiconductor
T6641 – 29 MP	6600 x 4400	4	Mono/Color/ Sparse CFA with Enhanced NIR	36.17 mm (H) × 24.11 mm (V)	KAI-29052, ON Semiconductor
T6640 – 29 MP	6600 x 4400	4	Mono/Color/ Sparse CFA	36.17 mm (H) x 24.11 mm (V)	KAI-29050, ON Semiconductor
T4940 – 16 MP	4920 x 3280	4	Mono/Color/ Sparse CFA	26.93 mm (H) x 17.95 mm (V)	KAI-16050, ON Semiconductor
T4840 – 16 MP	4880 x 3256	4	Mono/Color/ Sparse CFA	36.0 mm (H) x 23.9 mm (V)	KAI-16070, ON Semiconductor

Model	Resolution	Output Taps	Type	Image Area	Image Sensor / Manufacturer
T3640 – 8.6 MP	3624 x 2424	4	Mono/Color/ Sparse CFA	26.64 mm (H) × 17.76 mm (V)	KAI-08670, ON Semiconductor
T3340 – 8 MP	3320 x 2496	4	Mono/Color/ Sparse CFA	18.13 mm (H) x 13.60 mm (V)	KAI-08051, ON Semiconductor
T2040 – 4 MP	2072 x 2072	4	Mono/Color/ Sparse CFA	15.2 mm (H) x 15.2 mm (V)	KAI-04070, ON Semiconductor

Table 1: Tiger family megapixel cameras.

1.1.1 Camera Output Interface Options

The following output interfaces are available for Tiger cameras:

Camera Link (CL). Available for all Tiger cameras. Imperx provides the CamConfig software graphical user interface (GUI) for configuring your camera.

- CamConfig provides direct communications between the camera and the computer. You can program and control camera features including exposure and gain, triggers, image parameters, inputs/outputs, and so on. The software also provides real-time status information on output resolution, frame rate, frame time, and exposure.
- The T8810 camera has 8 CCD output taps but uses a 4-Tap Camera Link Medium interface. The camera reads out the 8 CCD taps at 40 MHz but outputs the 4 Camera Link Taps at 80 MHz. The Camera Link Medium interface supports 8, 10 and 12-bit data formats. The output data is 4-tap interleaved as follows:

Taps	Pixel	Pixel	Pixel	Pixel
Tap 1	1	5	9	etc.
Tap 2	2	6	10	etc.
Tap 3	3	7	11	etc.
Tap 4	4	8	12	etc.

- The T8820 camera has 16 CCD output taps and uses an 8-tap Camera Link Full interface. The camera reads out the 16 CCD taps at 40MHz but outputs the 8 Camera Link Taps at 80 MHz. The Camera Link Full interface only supports 8 or 10-bit data formats. While the camera digitization can support 12-bits per pixel, the Camera Link Full Interface limits the pixel depth to a maximum of 10-bits.

CoaXPress (CXP). Available for Tiger camera models T9040, T8040, T6641, T6640, T4940, T4840, T3640, T3340, T2040. Uses third-party software in the CXP frame grabber to configure the camera.

- An XML file included with the camera provides the parameter names, type, values, access, and descriptions available for controlling the camera. Section 4 CXP Camera Configuration provides the XML file data.

1.1.2 Tiger Key Features

The following features apply generally to Tiger cameras. Some features might apply only to certain cameras or to ruggedized (R) versions or industrial (I) versions.

- Programmable and field upgradeable
- Multiple output interfaces available:
  - Camera Link output with software configuration GUI
  - CoaXPress output (excluding T8820 and T8810) with XML parameters
- Ruggedized and industrial versions
- Lens control for Canon EF mount (excluding T8820, T8810, and T9040)
- Monochrome, Bayer, Sparse Color Filter Array image sensor types
- Enhanced NIR (T6641 only)
- Forced air cooling (I) small Tigers; (I & R) large Tigers
- Internal/external exposure control
- Broad dynamic range and high sensitivity
- Analog and digital gain/offset controls
- Area of interest (AOI)
- Programmable long exposure mode
- Automatic gain, automatic exposure control (R)
- Automatic and manual white balance
- Large number of trigger modes
- Aerial mapping tools (cross-hair superposition, mid-exposure signal) (R)
- Test image
- Built in pulse generator
- Programmable outputs for synchronization to lighting or cameras
- Black level correction
- User spaces for modifying and saving camera operational parameters
- Bad pixel correction, flat field correction, programmable lookup tables (LUT)
- Temperature monitor

1.2 Industrial Versus Ruggedized Version Overviews

Tiger are available in industrial versions and ruggedized versions. The following table describes the major differences between industrial and ruggedized versions.

Parameters	Industrial Versions (I)	Ruggedized Versions (R)
Temperature Range	-10 °C to +60 °C	-40 °C to +85 °C
Shock	200G	1000G
Vibration	20G, 20-200 Hz XYZ	100G, 20-200 Hz XYZ
Digital Gain	None	Yes
Smear Correction	None	Yes
Area of Interest	One	Two (Master/Slave)
Analog Gain Range	0 to 24 dB	0 to 30 dB
Forced Air Cooling	Yes	No (except T8810/T8820)
Camera Output Signal	One	Two

Table 2: Industrial vs. Ruggedized camera versions.

1.3 T9040 Technical Specifications

Specifications	Tiger T9040
Total image resolution	10440 (H) x 4880 (V) (std.); 10480 (H) x 4840 (V) (max.)
Active image area	46.98 mm (H) × 21.60 mm (V)
Pixel size	4.5 µm
Pixel Clock Rate	58 MHz (Default), 40 MHz (Optional)
Camera size W x H x L	69.5 mm x 69.5 mm x 51.5 mm (Ruggedized, no fan) 69.5 mm x 76.3 mm x 51.5 mm (Industrial, with fan)
Video output	8-bit, 10-bit, 12-bit
Camera interface	Camera Link Medium (CLM), Base (CLB) (optional for 40 MHz only) CoaXPress (CXP)
Maximum frame rate	3.5 fps (58 MHz), 2.5 fps (40 MHz)(CLM & CXP)
Long integration	Up to 16 seconds
Dynamic range	>60 dB
Shutter speed	1 µs step, 1/100,000 to 1/2.5 s (nom)
Analog gain	Manual, Auto: 0 – 30 dB (Ruggedized) 0 – 24 dB (Industrial)
Analog offset	0 to 25% of Dynamic range in 4096 steps
Digital gain	1.0x to 4.0x, 0.001x steps
Digital offset	-12.5% to +12.5% of dynamic range in 1024 steps (-512 to + 511, 1 step increments)
Auto gain/exposure	Yes (Ruggedized)
Smear correction	Yes (Ruggedized)
Pulse generator	Yes
Strobe output	2 strobes (Ruggedized); 1 strobe (Industrial)
Area of interest	1 master, 1 slave (Ruggedized), 1 master (Industrial)
LUTs	4 User LUTs
Flat field correction tables	2
Bad pixel correction	Optional On/Off
Digital bit shift	Yes
Trigger options	Edge, Pulse width, Trigger filter, Trigger delay, Debounce
Trigger modes	Standard, Fast, and Double
Camera image memory	Yes
Lens mount	M58
Operating temperature	-40 °C to +85 °C (Ruggedized); -10 °C to +60 °C (Industrial)
Storage temperature	-50 °C to +90 °C

Specifications	Tiger T9040
Humidity	10% to 90% non-condensing
Power consumption (Ruggedized)	9 W (EST) (58 MHz); 8.16 W (40 MHz) – CLM 10.08 W – 10.56 W (58 MHz,); 8.88 W – 9.36 W (40 MHz) – CXP
Power consumption (Industrial)	9.6 W (EST) (58 MHz); 8.76 (40 MHz) – CLM 10.80 W – 11.28 W (58 MHz); 9.60 W – 10.08 W (40 MHz) – CXP
Regulatory	FCC Part 15 Class A, CE, RoHS

Table 3: T9040 technical specifications.

1.4 T8820 and T8810 Technical Specifications

The T8820 and T8810 cameras use the Camera Link (CL) output interface.

Specifications	Tiger T8820	Tiger T8810
Total image resolution	8856 (H) x 5280(V) (std.); 8880 (H) x 5300 (V) (max.)	8856 (H) x (V) (std.); 8880 (H) x 5300 (V) (max.)
Active image area	48.7 mm (H) × 29.0 mm (V)	48.7 mm (H) × 29.0 mm (V)
Tap outputs	16	8
Pixel size	5.5 µm	5.5 µm
Camera size W x H x L	88 mm x 88 mm x 59mm Without bezel	88 mm x 88 mm x 59 mm Without bezel
Video output	8-bit, 10-bit	8-bit, 10-bit, 12-bit
Camera interface	Camera Link Full (CLF)	Camera Link Medium (CLM)
Maximum frame rate	6.7 fps (CL)	3.3 fps (CL)
Long integration	Up to 16 seconds	Up to 16 seconds
Dynamic range	66 dB	66 dB
Shutter speed	1 µs step, 1/100,000 to 1/6.7 s (nom)	1 µs step, 1/100,000 to 1/3.3 s (nom)
Analog gain	Manual, Auto: 0 – 30 dB (Ruggedized) 0 – 24 dB (Industrial)	Manual, Auto: 0 – 30 dB (Ruggedized) 0 – 24 dB (Industrial)
Analog offset	0 to 25% of Dynamic range in 4096 steps	0 to 25% of Dynamic range in 4096 steps
Digital gain	1.0x to 4.0x (0.001x step)	1.0x to 4.0x (0.001x step)
Digital offset	-12.5% to +12.5% of dynamic range in 1024 steps (-512 to +511, 1 step increments)	-12.5% to +12.5% of dynamic range in 1024 steps (-512 to +511, 1 step increments)
Auto gain/exposure	Yes (Ruggedized)	Yes (Ruggedized)
Smear correction	Yes (Ruggedized)	Yes (Ruggedized)
Pulse generator	Yes	Yes
Strobe output	2 strobes	2 strobes
Area of interest	1 master, 1 slave (Ruggedized) 1 master (Industrial)	1 master, 1 slave (Ruggedized) 1 master (Industrial)
LUTs	4 User LUTs	4 User LUTs

Specifications	Tiger T8820	Tiger T8810
Flat field correction tables	2	2
Bad pixel correction	Optional On/Off	Optional On/Off
Digital bit shift	Yes	Yes
Trigger options	Edge, Pulse width, Trigger filter, Trigger delay, Debounce	Edge, Pulse width, Trigger filter, Trigger delay, Debounce
Trigger modes	Standard, Fast, and Double	Standard, Fast, and Double
Camera image memory	Yes	Yes
Lens mount	M72	M72
Operating temperature	-40 °C to +85 °C (Ruggedized) -10 °C to +60 °C (Industrial)	-40 °C to +85 °C (Ruggedized) -10 °C to +60 °C (Industrial)
Storage temperature	-50 °C to +90 °C	-50 °C to +90 °C
Humidity	10% to 90% non-condensing	10% to 90% non-condensing
Power consumption	14 W (typical)	14 W (typical)
Regulatory	FCC Part 15 Class A, CE, RoHS	

Table 4: T8820, T8810 technical specifications.

1.5 T8040 Technical Specifications

Specifications	Tiger T8040
Total image resolution	8040 (H) x 5360 (V) (std.); 8080 (H) x 5400 (V) (max.)
Active image area	36.18 mm (H) × 24.12 mm (V)
Pixel size	4.5 µm
Pixel Clock Rate	58 MHz (Default), 40 MHz (Optional)
Camera size W x H x L	69.5 mm x 69.5 mm x 51.5 mm (Ruggedized, no fan) 69.5 mm x 76.3 mm x 51.5 mm (Industrial, with fan)
Video output	8-bit, 10-bit, 12-bit
Camera interface	Camera Link Medium (CLM), Camera Link Base (CLB) (optional for 40 MHz only) CoaXPress (CXP)
Maximum frame rate	3.8 fps (58 MHz), 2.7 fps (40 MHz) (CLM & CXP)
Long integration	Up to 16 seconds
Dynamic range	>60 dB
Shutter speed	1 µs step, 1/100,000 to 1/2.7 s (nom)
Analog gain	Manual, Auto: 0 – 30dB (Ruggedized) 0 – 24 dB (Industrial)
Analog offset	0 to 25% of Dynamic range in 4096 steps
Digital gain	1.0x to 4.0x, 0.001x steps
Digital offset	-12.5% to +12.5% of dynamic range in 1024 steps (-512 to +511, 1 step increments)
Auto gain/exposure	Yes (Ruggedized)
Smear correction	Yes (Ruggedized)
Pulse generator	Yes
Strobe output	2 strobes (Ruggedized); 1 strobe (Industrial)
Canon EF Lens Control	Yes
Area of interest	1 master, 1 slave (ruggedized), 1 master (industrial)
LUTs	4 User LUTs
Flat field correction tables	2
Bad pixel correction	Optional On/Off

Specifications	Tiger T8040
Digital bit shift	Yes
Trigger options	Edge, Pulse width, Trigger filter, Trigger delay, Debounce
Trigger modes	Standard, Fast, and Double
Camera image memory	Yes
Operating temperature	-40 °C to +85 °C (Ruggedized); -10 °C to +60 °C (Industrial)
Storage temperature	-50 °C to +90 °C
Humidity	10% to 90% non-condensing
Power consumption (Ruggedized)	9.0 W (58 MHz); 7.68 W (40 MHz) CLM 9.84 W – 10.32 W (58 MHz); 8.64 W – 9.12 W (40 MHz) CXP
Power consumption (Industrial)	9.6 W (58 MHz); 8.28 W (40 MHz) CLM 10.56 W – 11.04 W (58 MHz); 9.36 W – 9.84 W (40 MHz) CXP
Regulatory	FCC Part 15 Class A, CE, RoHS

Table 5: T8040 technical specifications.

1.6 T6640 / T6641 Technical Specifications

Specifications	Tiger T6640 / T6641
Total image resolution	6576 (H) x 4384 (V) (std.); 6600 (H) x 4400 (V) (max.)
Active image area	36.17 mm (H) × 24.11 mm (V)
Pixel size	5.5 µm
Camera size W x H x L	69.5 mm x 69.5 mm x 51.5 mm (Ruggedized, no fan) 69.5 mm x 76.3 mm x 51.5 mm (Industrial, with fan)
Video output	8-bit, 10-bit, 12-bit
Camera interface	Camera Link Medium (CLM) CoaXPress (CXP)
Maximum frame rate	4.7 fps (CLM & CXP)
Long integration	Up to 16 seconds
Dynamic range	64 dB
Shutter speed	1 µs step, 1/100,000 to 1/4.7 s (nom)
Analog gain	Manual, Auto: 0 – 30 dB (Ruggedized) 0 – 24 dB (Industrial)
Analog offset	0 to 25% of Dynamic range in 4096 steps
Digital gain	1.0x to 4.0x, 0.001x steps
Digital offset	-12.5% to +12.5% of dynamic range in 1024 steps (-512 to +511, 1 step increments)
Auto gain/exposure	Yes (Ruggedized)
Smear correction	Yes (Ruggedized)
Pulse generator	Yes
Strobe output	2 strobes (Ruggedized); 1 strobe (Industrial)
Canon EF Lens Control	Yes
Area of interest	1 master, 1 slave (Ruggedized), 1 master (Industrial)
LUTs	4 User LUTs
Flat field correction tables	2
Bad pixel correction	Optional On/Off
Digital bit shift	Yes

Specifications	Tiger T6640 / T6641
Trigger options	Edge, Pulse width, Trigger filter, Trigger delay, Debounce
Trigger modes	Standard, Fast, and Double
Camera image memory	Yes
Operating temperature	-40 °C to +85 °C (Ruggedized); -10 °C to +60 °C (Industrial)
Storage temperature	-50 °C to +90 °C
Humidity	10% to 90% non-condensing
Power consumption (Ruggedized)	7.92 W (typ.) CLM 8.40 W – 8.88 W (typ.) CXP
Power consumption (Industrial)	8.52 W (typ.) CLM 9.12 W – 9.60 W (typ.)CXP
Regulatory	FCC Part 15 Class A, CE, RoHS

Table 6: T6640 / T6641 technical specifications.

1.7 T4940 and T4840 Technical Specifications

Specifications	Tiger T4940	T4840
Total image resolution	4896 (H) x3264 (V) (std.); 4920 (H) x 3280 (V) (max.)	4864 (H) x 3232 (V) (std.); 4880 (H) x 3256 (V) (max.)
Active image area	26.93 mm (H) x 17.95 mm (V)	36.0 mm (H) x 23.9 mm (V)
Pixel size	5.5 µm	7.4 µm
Camera size W x H x L	69.5 mm x 69.5 mm x 51.5 mm (Ruggedized, no fan) 69.5 mm x 76.3 mm x 51.5 mm (Industrial, with fan)	69.5 mm x 69.5 mm x 51.5 mm (Ruggedized, no fan) 69.5 mm x 76.3 mm x 51.5 mm (Industrial, with fan)
Video output	8-bit, 10-bit, 12-bit	8-bit, 10-bit, 12-bit
Camera interface	Camera Link Medium (CLM) CoaXPress (CXP)	Camera Link Medium (CLM) CoaXPress (CXP)
Maximum frame rate	8.8 fps (CL & CXP)	7.6 fps (CL & CXP)
Long integration	Up to 16 seconds	Up to 16 seconds
Dynamic range	64dB	70dB
Shutter speed	1 µs step, 1/100,000 to 1/8.8 s (nom)	1 µs step, 1/100,000 to 1/7.6 s (nom)
Analog gain	Manual, Auto: 0 – 30 dB (Ruggedized) 0 – 24 dB (Industrial)	Manual, Auto: 0 – 30 dB (Ruggedized) 0 – 24 dB (Industrial)
Analog offset	0 to 25% of Dynamic range in 4096 steps	0 to 25% of Dynamic range in 4096 steps
Digital gain	1.0x to 4.0x, 0.001x steps	1.0x to 4.0x, 0.001x steps
Digital offset	-12.5% to +12.5% of dynamic range in 1024 steps (-512 to +511, 1 step increments)	-12.5% to +12.5% of dynamic range in 1024 steps (-512 to +511, 1 step increments)
Auto gain/exposure	Yes (Ruggedized)	Yes (Ruggedized)
Smear correction	Yes (Ruggedized)	Yes (Ruggedized)
Pulse generator	Yes	Yes
Strobe output	2 strobes (Ruggedized); 1 strobe (Industrial)	2 strobes (Ruggedized); 1 strobe (Industrial)
Area of interest	1 master, 1 slave (Ruggedized) 1 master (Industrial)	1 master, 1 slave (Ruggedized) 1 master (Industrial)
LUTs	4 User LUTs	4 User LUTs

Specifications	Tiger T4940	T4840
Flat field correction tables	2	2
Bad pixel correction	Optional On/Off	Optional On/Off
Digital bit shift	Yes	Yes
Trigger options	Edge, Pulse width, Trigger filter, Trigger delay, Debounce	Edge, Pulse width, Trigger filter, Trigger delay, Debounce
Trigger modes	Standard, Fast, and Double	Standard, Fast, and Double
Camera image memory	Yes	Yes
Operating temperature	-40 °C to +85 °C (Ruggedized) -10 °C to +60 °C (Industrial)	-40 °C to +85 °C (Ruggedized) -10 °C to +60 °C (Industrial)
Storage temperature	-50 °C to +90 °C	-50 °C to +90 °C
Humidity	10% to 90% non-condensing	10% to 90% non-condensing
Power consumption (Ruggedized)	8.76 W (typ.) CLM 9.12 W – 9.60 W (typ.) CXP	8.76 W (typ.) CLM 9.12 W – 9.60 W (typ.) CXP
Power consumption (Industrial)	9.36 W (typ.) CLM 9.60 W – 10.08 W (typ.) CXP	9.36 W (typ.) CLM 9.60 W – 10.08 W (typ.) CXP
Regulatory	FCC Part 15 Class A, CE, RoHS	

Table 7: T4940, T4840 technical specifications.

1.8 T3640 and T3340 Technical Specifications

Specifications	Tiger T3640	T3340
Total image resolution	3600 (H) x 2400 (V) (std.); 3624 (H) x 2424 (V) (max.)	3296 (H) x 2472 (V) (std.); 3320 (H) x 2496 (V) (max.)
Active image area	26.64 mm (H) × 17.76 mm (V)	18.13 mm (H) x 13.60 mm (V)
Pixel size	7.4 µm	5.5 µm
Camera size W x H x L	69.5 mm x 69.5 mm x 51.5 mm (Ruggedized, no fan) 69.5 mm x 76.3 mm x 51.5 mm (Industrial, with fan)	69.5 mm x 69.5 mm x 51.5 mm (Ruggedized, no fan) 69.5 mm x 76.3 mm x 51.5 mm (Industrial, with fan)
Video output	8-bit, 10-bit, 12-bit	8-bit, 10-bit, 12-bit
Camera interface	Camera Link Medium (CLM) CoaXPress (CXP)	Camera Link Medium (CLM) CoaXPress (CXP)
Maximum frame rate	13.6 fps (CL & CXP)	21 fps (CL & CXP)
Long integration	Up to 16 seconds	Up to 16 seconds
Dynamic range	70 dB	66 dB
Shutter speed	1 µs step, 1/100,000 to 1/13.6 s (nom)	1 µs step, 1/100,000 to 1/21 s (nom)
Analog gain	Manual, Auto: 0 – 30dB (Ruggedized) 0 – 24dB (Industrial)	Manual, Auto: 0 – 30dB (Ruggedized) 0 – 24dB (Industrial)
Analog offset	0 to 25% of Dynamic range in 4096 steps	0 to 25% of Dynamic range in 4096 steps
Digital gain	1.0x to 4.0x, 0.001x steps	1.0x to 4.0x, 0.001x steps
Digital offset	-12.5% to +12.5% of dynamic range in 1024 steps (-512 to +511, 1 step increments)	-12.5% to +12.5% of dynamic range in 1024 steps (-512 to +511, 1 step increments)
Auto gain/exposure	Yes (Ruggedized)	Yes (Ruggedized)
Smear correction	Yes (Ruggedized)	Yes (Ruggedized)
Pulse generator	Yes	Yes
Strobe output	2 strobes (Ruggedized); 1 strobe (Industrial)	2 strobes (Ruggedized); 1 strobe (Industrial)
Canon EF Lens Control	Yes	Yes
Area of interest	1 master, 1 slave (Ruggedized) 1 master (Industrial)	1 master, 1 slave (Ruggedized) 1 master (Industrial)

Specifications	Tiger T3640	T3340
LUTs	4 User LUTs	4 User LUTs
Flat field correction tables	2	2
Bad pixel correction	Optional On/Off	Optional On/Off
Digital bit shift	Yes	Yes
Trigger options	Edge, Pulse width, Trigger filter, Trigger delay, Debounce	Edge, Pulse width, Trigger filter, Trigger delay, Debounce
Trigger modes	Standard, Fast, and Double	Standard, Fast, and Double
Camera image memory	Yes	Yes
Operating temperature	-40 °C to +85 °C (Ruggedized) -10 °C to +60 °C (Industrial)	-40 °C to +85 °C (Ruggedized) -10 °C to +60 °C (Industrial)
Storage temperature	-50 °C to +90 °C	-50 °C to +90 °C
Humidity	10% to 90% non-condensing	10% to 90% non-condensing
Power consumption (Ruggedized)	7.44 W (typ.) CLM 7.92 W – 8.40 W (typ.) CXP	7.8 W (typ.) CLM 8.16 W – 8.64 W (typ.) CXP
Power consumption (Industrial)	8.04 W (typ.) CLM 8.64 W – 9.12 W (typ.) CXP	8.4 W (typ.) CLM 8.88 W – 9.36 W (typ.) CXP
Regulatory	FCC Part 15 Class A, CE, RoHS	

Table 8: T3640, T3340 technical specifications.

1.9 T2040 Technical Specifications

Specifications	Tiger T2040
Total image resolution	2048 (H) x 2048 (V) (std.); 2072 (H) x 2072 (V) (max.)
Active image area	15.2 mm (H) x 15.2 mm (V)
Pixel size	7.4 µm
Camera size W x H x L	69.5 mm x 69.5 mm x 51.5 mm (Ruggedized, no fan) 69.5 mm x 76.3 mm x 51.5 mm (Industrial, with fan)
Video output	8-bit, 10-bit, 12-bit
Camera interface	Camera Link Medium (CLM) CoaXPress (CXP)
Maximum frame rate	34 fps (CL & CXP)
Long integration	Up to 16 seconds
Dynamic range	70 dB
Shutter speed	1 µs step, 1/100,000 to 1/34 s (nom)
Analog gain	Manual, Auto: 0 – 30 dB (Ruggedized) 0 – 24 dB (Industrial)
Analog offset	0 to 25% of Dynamic range in 4096 steps
Digital gain	1.0x to 4.0x, 0.001x steps
Digital offset	-12.5% to +12.5% of dynamic range in 1024 steps (-512 to + 511, 1 step increments)
Auto gain/exposure	Yes (Ruggedized)
Smear correction	Yes (Ruggedized)
Pulse generator	Yes
Strobe output	2 strobes (Ruggedized); 1 strobe (Industrial)
Canon EF Lens Control	Yes
Area of interest	1 master, 1 slave (Ruggedized) 1 master (Industrial)
LUTs	4 User LUTs
Flat field correction tables	2
Bad pixel correction	Optional On/Off
Digital bit shift	Yes

Specifications	Tiger T2040
Trigger options	Edge, Pulse width, Trigger filter, Trigger delay, Debounce
Trigger modes	Standard, Fast, and Double
Camera image memory	Yes
Operating temperature	-40 °C to +85 °C (Ruggedized) -10 °C to +60 °C (Industrial)
Storage temperature	-50 °C to +90 °C
Humidity	10% to 90% non-condensing
Power consumption (Ruggedized)	7.8 W (typ.) CLM 8.16 W – 8.64 W (typ.) CXP
Power consumption (Industrial)	8.4 W (typ.) CLM 8.88 W – 9.36 W (typ.) CXP
Regulatory	FCC Part 15 Class A, CE, RoHS

Table 9: T2040 technical specifications.

1.9 Active Canon EF Mounts

The Canon EF lens mount provides active lens control for Tiger cameras T9040, T8040, T6641, T6640, T4940, T4840, T3640, T3340, and T2040.

Tiger cameras provide communication and power to the mount through an internal connector on the front of the camera. The connector eliminates the need for a special power supply and external cable between the camera and the Canon EF mount (Figure 1).

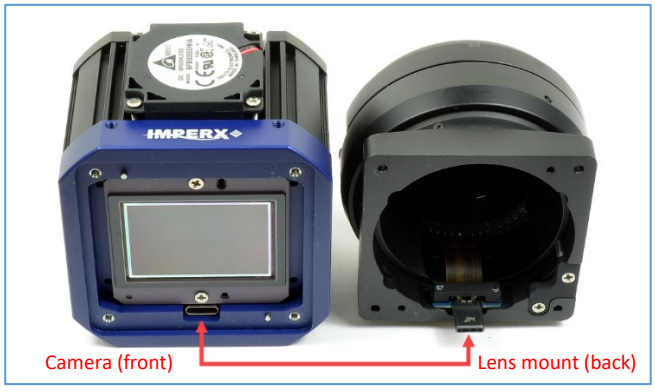

Figure 1: The camera (left) and Canon EF lens mount (right) connect internally.

1.9 Ordering Information

<table>
<tr><td colspan="6">Sample code: CLF-T8820C-RS000 (ruggedized); CLM-T6640M-IF000 (industrial, F-mount)
CLM-T6640C-RL000 (ruggedized and EOS mount lens control)
CXP-T6640C-RF000 (ruggedized); CXP-T3340M-IF000 (industrial, F-mount)</td></tr>
<tr><td>Interface</td><td>Camera Model</td><td>Sensor Type</td><td>Ruggedized/ Industrial</td><td>Lens Mount</td><td>Filter/ Custom Options</td></tr>
<tr><td>CLF - Camera Link Full/Deca</td><td>T8820</td><td rowspan="11">M – monochrome
C – Bayer color
S – sparse color</td><td rowspan="11">R – Ruggedized
I – Industrial</td><td rowspan="2">S – M72 for T8810/T8820</td><td rowspan="11">000 – none</td></tr>
<tr><td>CLM - Camera Link Medium</td><td>T8810</td></tr>
<tr><td>CLM - Camera Link Medium or CXP - CoaXPress</td><td>T9040</td><td>V – M58 for T9040</td></tr>
<tr><td rowspan="8">CLM - Camera Link Medium or CXP - CoaXPress</td><td>T8040</td><td rowspan="8">F – F-mount (default)
L – Canon EF Active mount
E – Canon EF Passive mount
M – M42
C – C-mount for T3340/T2040</td></tr>
<tr><td>T6640</td></tr>
<tr><td>T6641</td></tr>
<tr><td>T4940</td></tr>
<tr><td>T4840</td></tr>
<tr><td>T3640</td></tr>
<tr><td>T3340</td></tr>
<tr><td>T2040</td></tr>
<tr><td colspan="6">Note: PS12V04A Power Supply sold separately.</td></tr>
</table>

Table 10: Camera ordering information.

2 Hardware

2.1 Camera Link Camera Output

Tiger Camera Link cameras provide connectors for power and inputs/outputs, factory programming, and two connectors for Camera Link output.

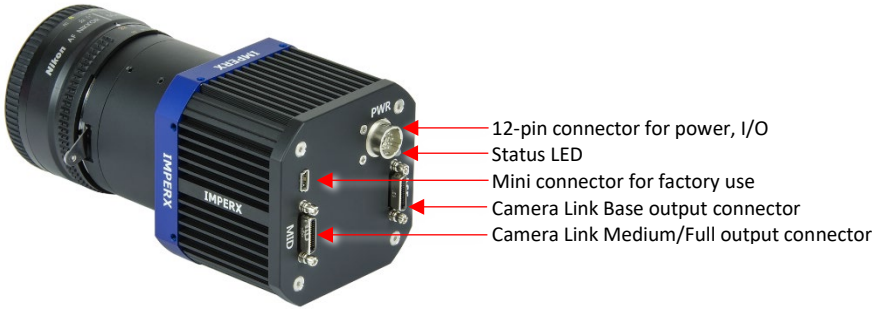

Figure 2: Back panel of the Tiger CLM T6640 camera.

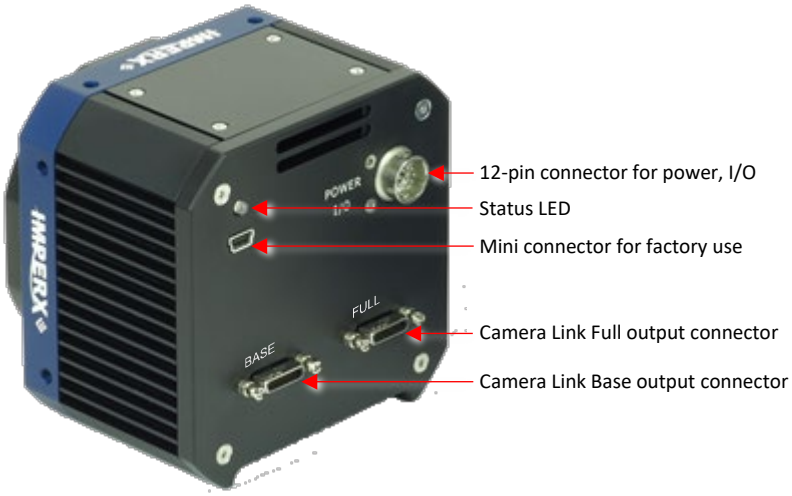

Figure 3: Back panel of the Tiger CLF T8820 camera.

The following table describes the connectors and the LED status indicator on Tiger cameras.

Camera Connectors	Description
12-pin Hirose (male) Connector	Locking receptacle #HR10A-10R-12PB(71) providing power, I/O interface, and Serial RS232/485 interface (Figure 4: Connector Pin-outs.).
Camera Link Base	Camera output. Standard Base Camera Link Mini SDR connector provides data, sync, control, serial interface, and PoCL power.

Camera Connectors	Description
Camera Link Medium/Full	Camera output. Standard Medium Camera Link Mini SDR connector provides data, sync, control, serial interface, and PoCL power.
Single Mini (or Micro) USB connector	USB type B Factory programming connector (factory use only).
LED	Provides camera status information.

Table 11: Camera connectors and LED status indicator.

2.1.1 Camera Link Hirose Connector Pin Assignments

The male 12-pin Hirose connector provides power and all external input/output signals supplied to the camera (Table 10).

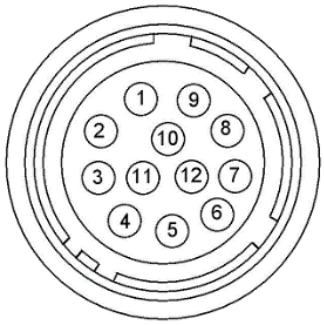

Figure 4: Connector Pin-outs.

The Hirose connector on the camera's back panel is a male type miniature locking receptacle #HR10A-10R-12PB(71). The Imperx power supply (sold separately) terminates in a female HIROSE type miniature locking receptacle #HR10A-10P-12S(73) and has two small BNC pig-tail cables for the external trigger input (black) and strobe output (white) (Figure 5).

Pin	Signal Name	Use
1	+12 VDC Return	12 VDC Main Power Return
2	+12 VDC	12 VDC Main Power
3	Reserved	Second RS232-RX
4	Reserved	Second RS232-TX
5	OUT2 B	General Purpose Output 2, Contact 1 (OPTO-isolated)
6	OUT1 RTN	General Purpose Output 1 Return (TTL)
7	OUT1	General Purpose Output 1 (TTL)
8	IN1	General Purpose Input 1 (Opto-isolated)

Pin	Signal Name	Use
9	IN2	General Purpose Input 2 (TTL)
10	IN1 RTN	General Purpose Input 1 Return (Opto-isolated)
11	IN2 TTL RTN	General Purpose Input 2 Return (TTL)
12	OUT2 A	General Purpose Output 2, Contact 2 (OPTO-isolated)

Table 12: Hirose connector pin assignments.

2.1.2 Camera Link Power Supply

The Camera Link version of the camera is compatible with power over Camera Link (PoCL) with a maximum power of 4W.

The Tiger camera can use an external power supply providing +12VDC, ± 10% and up to 2.5A DC current. Imperx offers the PS12V04A universal power supply adapter for use with all Tiger cameras. The PS12V04A includes connectors for trigger (black wire) and strobe (white wire).



Figure 5: PS12V04A power supply (ordered separately).

CAUTION

It is strongly recommended that you use the PS12V04A power adapter from Imperx!

2.1.3 Camera Link Cabling

Camera Link Full and Camera Link Medium camera connections use dual cables with 26-pin Camera Link mini shielded male SDR connectors. The maximum recommended Camera Link cable length is 10 meters.

TIP

Be sure to connect each cable from the frame grabber channel to its corresponding connector (Base, Medium, or Full) on the back of the camera. If you cannot communicate with the camera after making your connections, try swapping the cables.

2.1.4 Camera Link LED Status Indicators

The Camera Link camera has a dual red-green LED on the back panel of the camera. The following LED color and light patterns indicate the camera status and mode of operation:

LED Condition	Status Indication
Green steady ON	Normal operation. You should see a normal image coming out of the camera.
Green blinks at ~ 0.5 Hz	Indicates triggering mode.
Green blinks at ~ 2.0 Hz	Indicates Long integration mode.
Amber steady ON	Test mode. You should see one of the test patterns.
Amber blinks at ~ 0.5 Hz	Camera in AGC/AEC mode. In this mode, changing the shutter slider does not affect the image luminance.
Amber blinks at ~ 2.0 Hz	The camera is in Fast Trigger mode. Camera timing will be slaved to the external pulses. Changing programmable integration slider will not affect image luminance.
Red steady ON	Wrong or incomplete firmware load error. Re-power the camera and load factory settings. If the condition is still present, contact the factory for RMA.
Red blinks at ~ 0.5 Hz	Power failure error. Camera internal protection triggered by ESD event. Refer to Power Failure section. Re-power camera and load the factory settings. If the condition is still present, contact factory for RMA.
Red blinks at ~ 2.0 Hz	RS232 communication error or Camera Configuration error. Re-power camera and load factory settings. If condition is still present, contact factory for RMA.
LED OFF	Power not present. Possible power supply failure or faulty external AC/ adapter. Re-power camera and load factory settings. If LED is still OFF, contact factory for RMA.

Table 13: LED colors indicate Camera Link camera status.

2.2 CoaXPress (CXP) Camera Output

Tiger CXP cameras provide three connectors for outside equipment and one status indicator LED on the back panel.

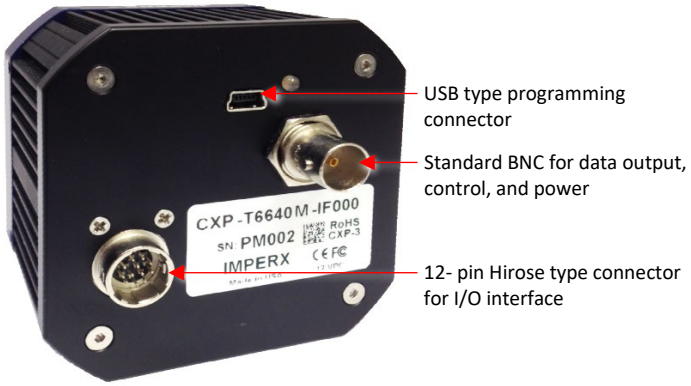

Figure 6: Back panel of Tiger CXP camera.

The following table describes the connectors and the LED status indicator on Tiger cameras.

Camera Connectors	Description
Standard BNC connector	Provides Power over CoaXPress (PoCXP), data output, control data (including Canon lens control), and trigger.
12-pin Hirose (male) connector	Provides I/O interface.
Single Mini (or Micro) USB connector	USB type B Factory programming connector (factory use only).
LED	Provides camera status information.
Serial Number	Displays camera model and serial number.

Table 14: Camera connectors and LED status indicator.

2.2.1 CXP Hirose Connector Pin Assignments

The male 12-pin Hirose connector provides external input/output signals to and from the camera (refer to the following CXP Hirose connector illustration). The male Hirose connector is a miniature locking receptacle #HR10A-10R-12PB(71).

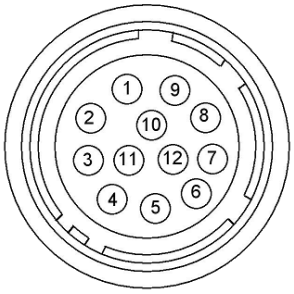

Figure 7: CXP camera Hirose connector pin-outs.

The following table provides the Hirose connector pin mappings:

Pin	Signal Name	Use
1	Reserved	Reserved
2	Reserved	Reserved
3	Reserved	Reserved
4	Reserved	Reserved
5	OUT2 RTN	General Purpose Output 2, Contact 1 (OPTO-isolated)
6	OUT1 RTN	General Purpose Output 1 Return (TTL)
7	OUT1	General Purpose Output 1 (TTL)
8	IN1	General Purpose Input 1 (Opto-isolated)
9	IN2	General Purpose Input 2 (TTL)
10	IN1 RTN	General Purpose Input 1 Return (Opto-isolated)
11	IN2 TTL RTN	General Purpose Input 2 Return (TTL)
12	OUT2	General Purpose Output 2, Contact 2 (OPTO-isolated)

Table 15: Hirose connector pin assignments.

2.2.2 CXP Camera Power and Data

The coaxial cable connected to the camera provides Power over CXP (PoCXP). The Camera's video data output, control data, and triggering are serialized and transmitted over CoaXPress (CXP) using the single standard BNC 75-ohm coaxial cable. The interface provides a high-speed downlink up to 6.25 Gbps for video transport and a lower speed 20Mbps uplink for communication and control.

2.2.3 CoaXPress LED Status

The CXP camera has a dual red-green LED on the back panel of the camera. The following LED color and light patterns indicate the camera status and mode of operation:

LED Condition	Status Indication
Green steady ON	Camera and host connected; no data being transferred.
Green blinking fast	Camera and host connected; data being transferred.
Orange blinking fast	Connection detection in progress, Power over CoaXPress (PoCXP) active.

Table 16: LED colors indicate CXP camera status.

2.3 I/O Electrical Connectivity

The Tiger camera has two external inputs, IN 1 and IN 2. Input IN1 is optically isolated while input IN2 accepts low voltage TTL (LVTTL). The camera provides two general-purpose outputs. Output OUT1 is a 5v TTL (5.0 Volts) compatible signal and output OUT2 is opto-isolated. The following figures show the external input electrical connections and the external output electrical connections:

A. Input IN 1- Opto-Isolated

Input signals IN1 and IN1 Rtn are optically isolated, and the voltage difference between the two must be positive between 3.3 and 24 volts.

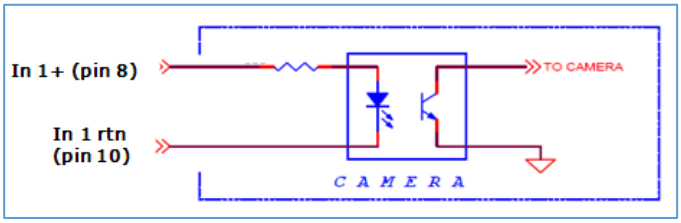

Figure 8: IN1 electrical connection.

B. Input IN 2 LVTTL

Input signals IN2 and IN2 Rtn provide interfaces to a TTL or LVTTL input signal. The signal level (voltage difference between the inputs IN2 and IN2 Rtn) must be LVTTL (3.3 volts) or TTL (5.0 volts). The total maximum input current must not exceed 2.0 mA.

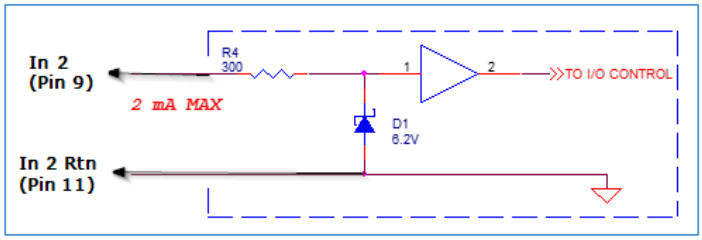

Figure 9: IN2 electrical connection.

C. Output OUT 1 LVTTL

Output OUT1 is a 5v TTL (5.0 Volts) compatible signal and the maximum output current must not exceed 8 mA.

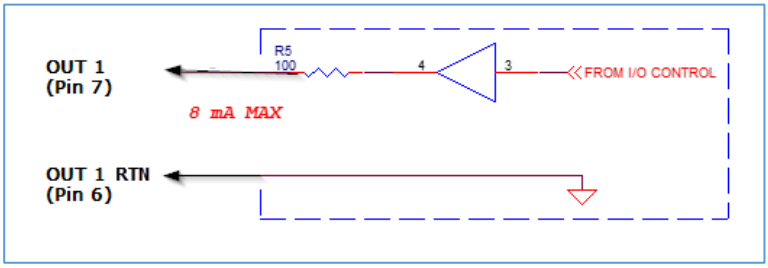

Figure 10: OUT1 LVTTL electrical connection.

D. Output OUT 2 – Solid state relay, optically isolated

Output OUT2 is an optically isolated switch. There is no pull-up voltage on either contact. External pull-up voltage of up to 25 volts is required for operation. Output is not polarity sensitive. AC or DC loads are possible. The voltage across OUT2 Contact 1 and OUT2 Contact 2 must not exceed 25 volts and the current through the switch must not exceed 50 mA. On resistance is less than 5 Ohms.

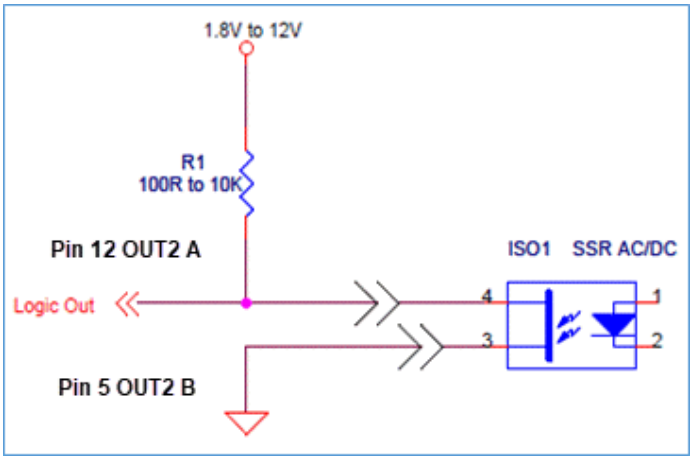

Figure 11: Open drain logic driver.

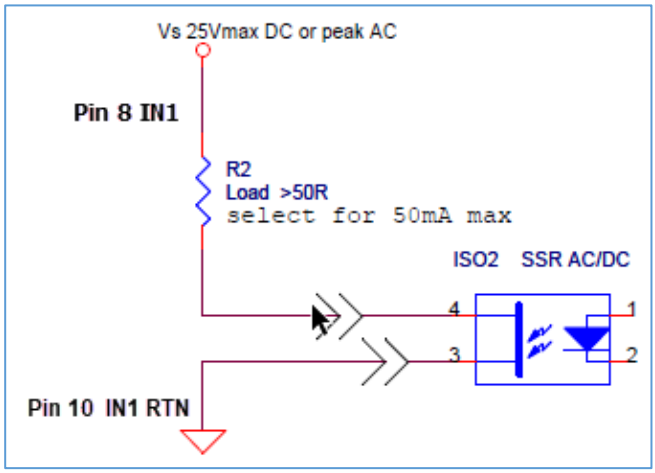

Figure 12: Low side load driver.

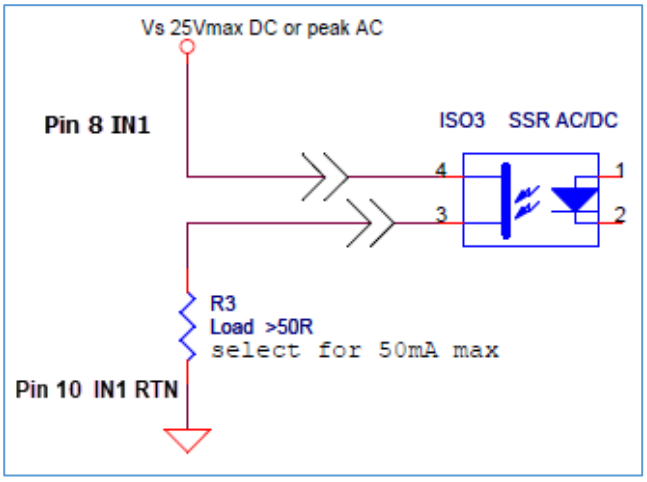

Figure 13: High side load driver.

2.4 Mechanical Drawings

The camera housing is made of high quality 6000 series aluminum construction. For maximum flexibility, the camera has eight M3X0.5mm mounting holes located near the front and the back.

A fan is available for providing additional cooling to the cameras. The fan adds about 7mm to the camera height (Y-Dimension). The bottom of the camera will include a serviceable filter assembly. A 10mm gap should be provided for airflow into the bottom portion of the camera. (Refer to 2.8 Forced Air Cooling.)

2.4.1 Large Tiger with Camera Link Output (Ruggedized and Industrial)

The following mechanical drawings show side, front, and back views of the Camera Link (CL) T8810 and T8820 cameras.

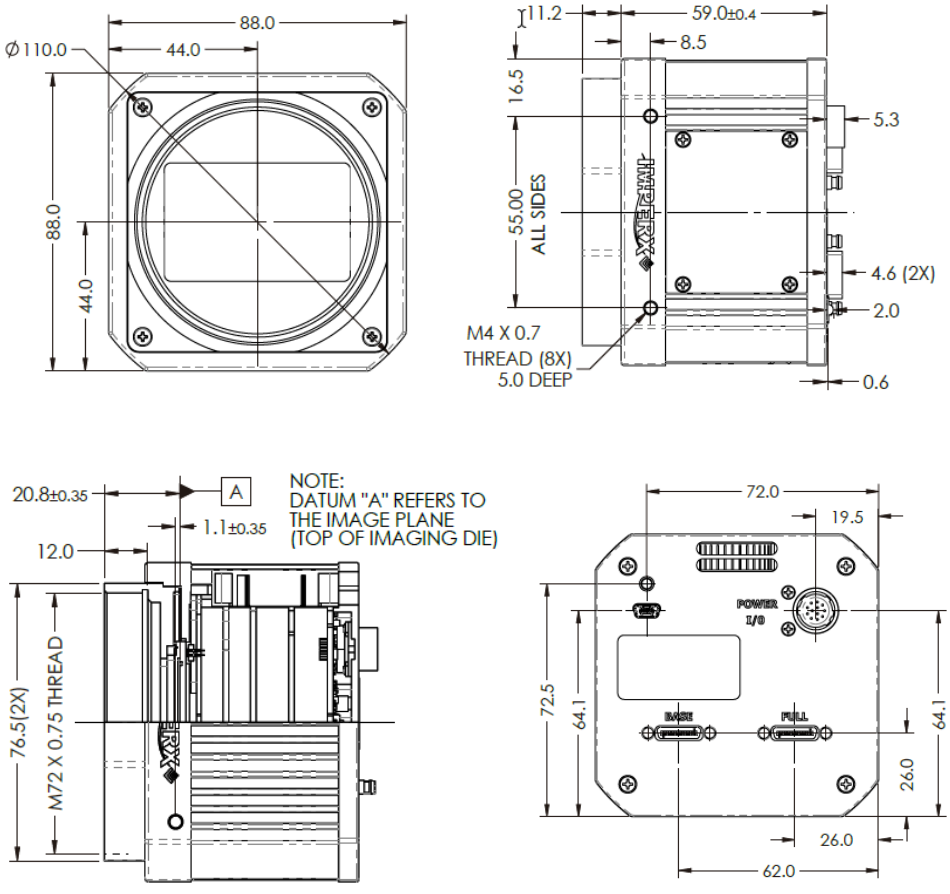

2.4.2 Small Tiger with Camera Link Output (Ruggedized)

The following mechanical drawings show front, side, and back views of the Camera Link (CL) T8040, T6640, T6641, T4940, T4840, T3640, T3340, T2040 cameras.

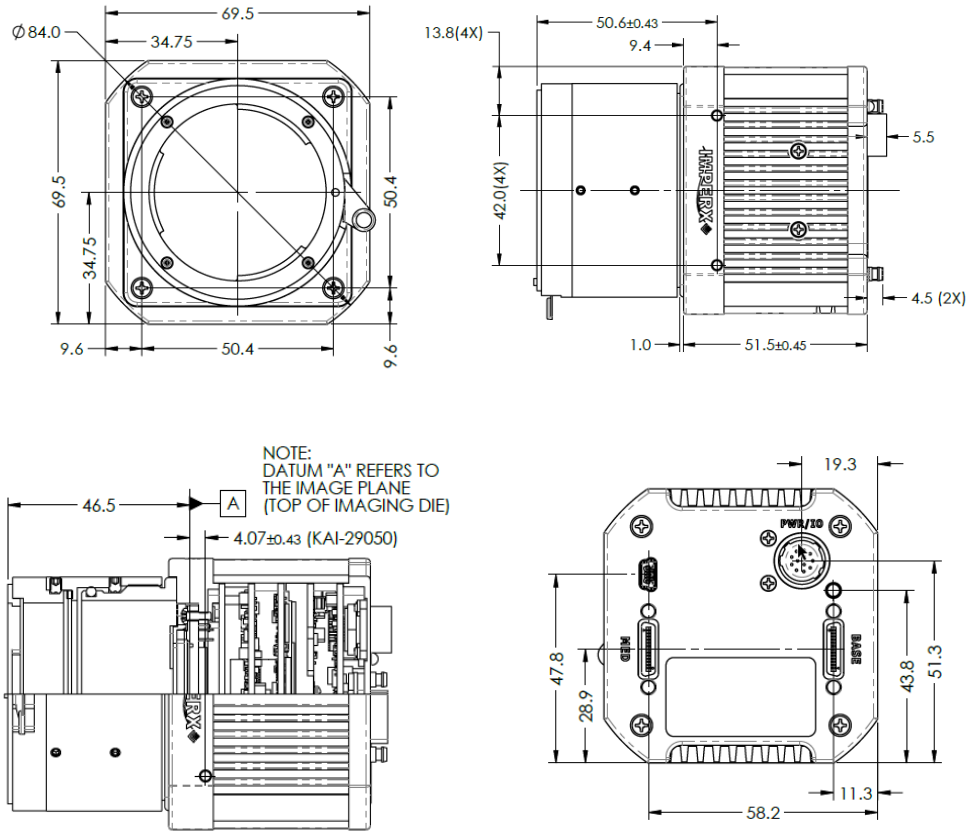

2.4.3 Small Tiger with Camera Link Output / Forced Air Cooling (Industrial)

The following mechanical drawings show front, side, and back views of the Camera Link (CL) T8040, T6640, T6641, T4940, T4840, T3640, T3340, T2040 cameras with forced air cooling.

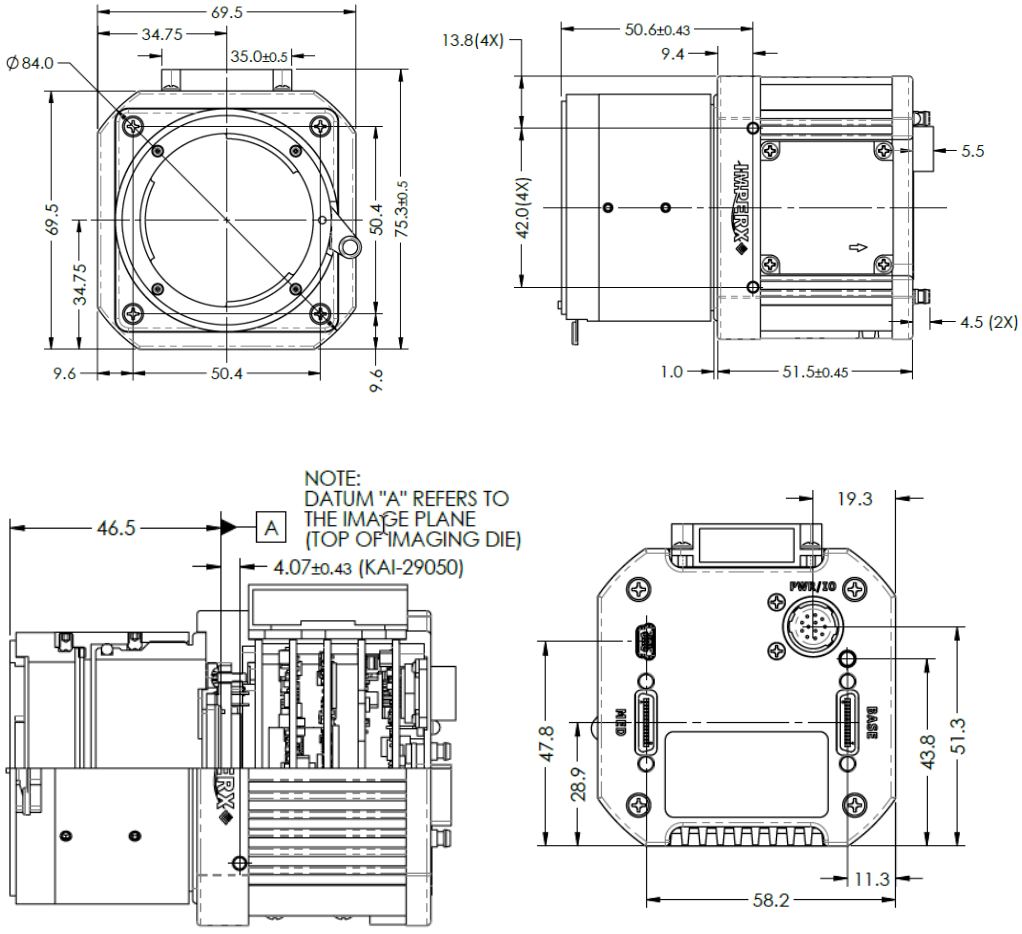

CAUTION

If installing the optional DC fan assembly, the height of the small camera increases by 5.8 mm (from 69.5mm to 75.3mm).

2.4.4 Small Tiger with CoaXPress Output (Ruggedized)

The following mechanical drawings show front, side, and back views of the CoaXPress (CXP) T8040, T6640, T6641, T4940, T4840, T3640, T3340, T2040 cameras.

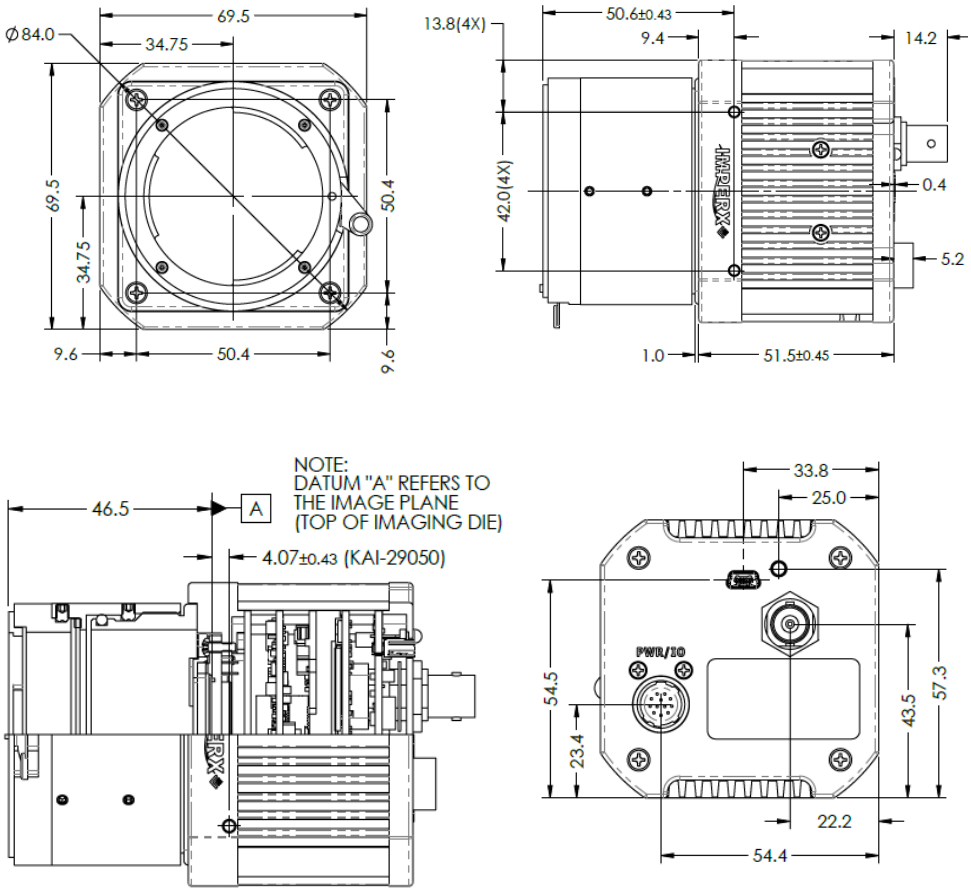

2.4.5 Small Tiger with CoaXPress Camera Output / Forced Air Cooling (Industrial)

The following mechanical drawings show front, side, and back views of the CoaXPress (CXP) T8040, T6640, T6641, T4940, T4840, T3640, T3340, T2040 cameras with forced air cooling.

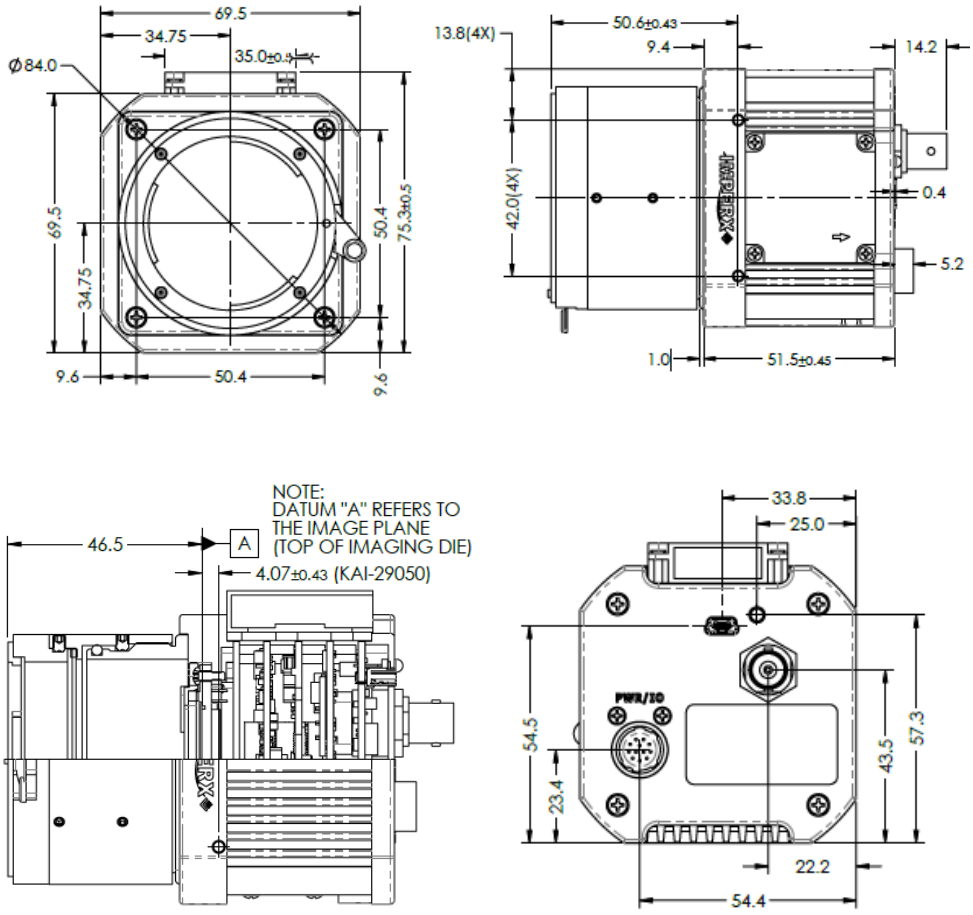

2.4.6 T9040 Camera with Camera Link Output (Ruggedized)

The following mechanical drawings show front, side, and back views of the T9040 Camera Link (CL) camera.

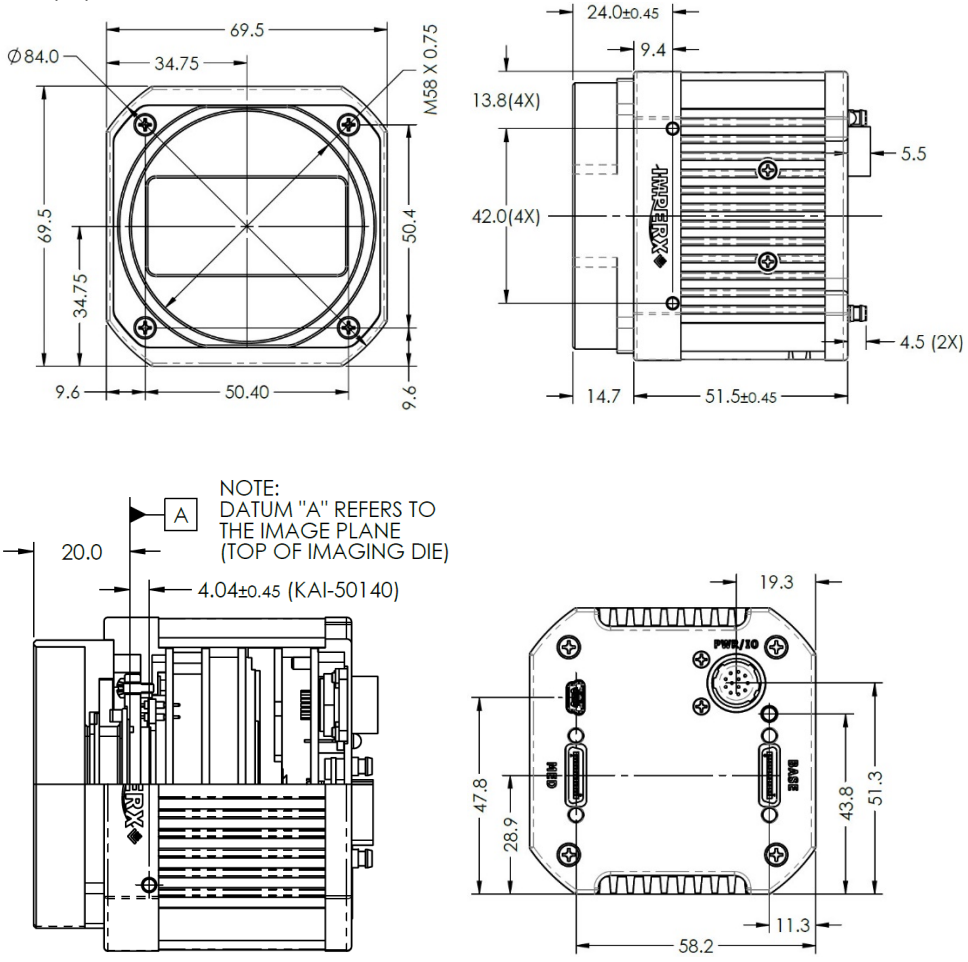

2.4.7 T9040 Camera with Camera Link Output / Forced Air Cooling (Industrial)

The following mechanical drawings show front, side, and back views of the T9040 Camera Link (CL) camera with forced air cooling.

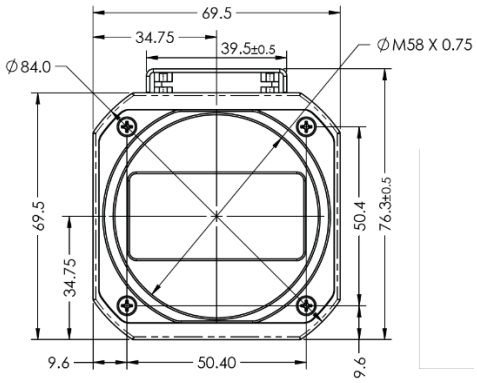

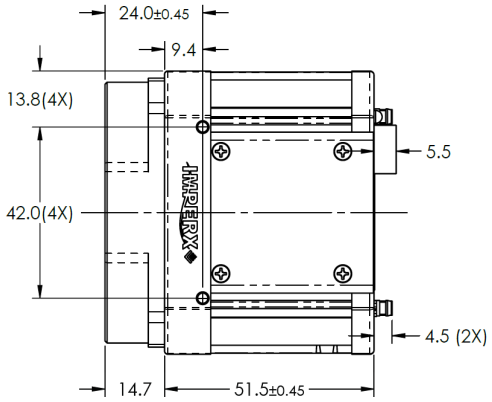

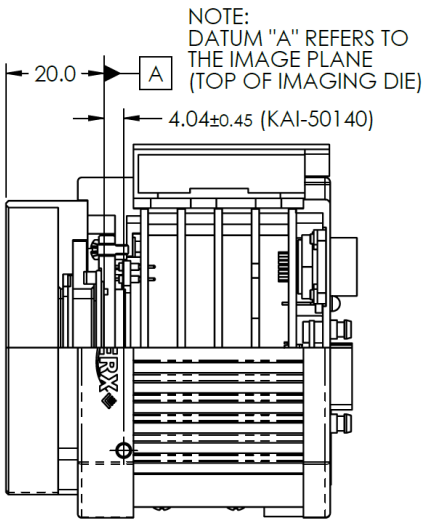

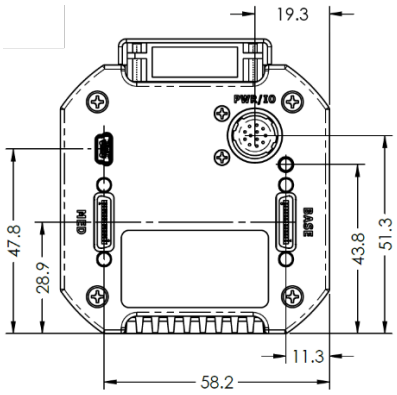

2.4.8 T9040 Camera with CoaXPress Output (Ruggedized)

The following mechanical drawings show front, side, and back views of the T9040 CoaXPress (CXP) camera.

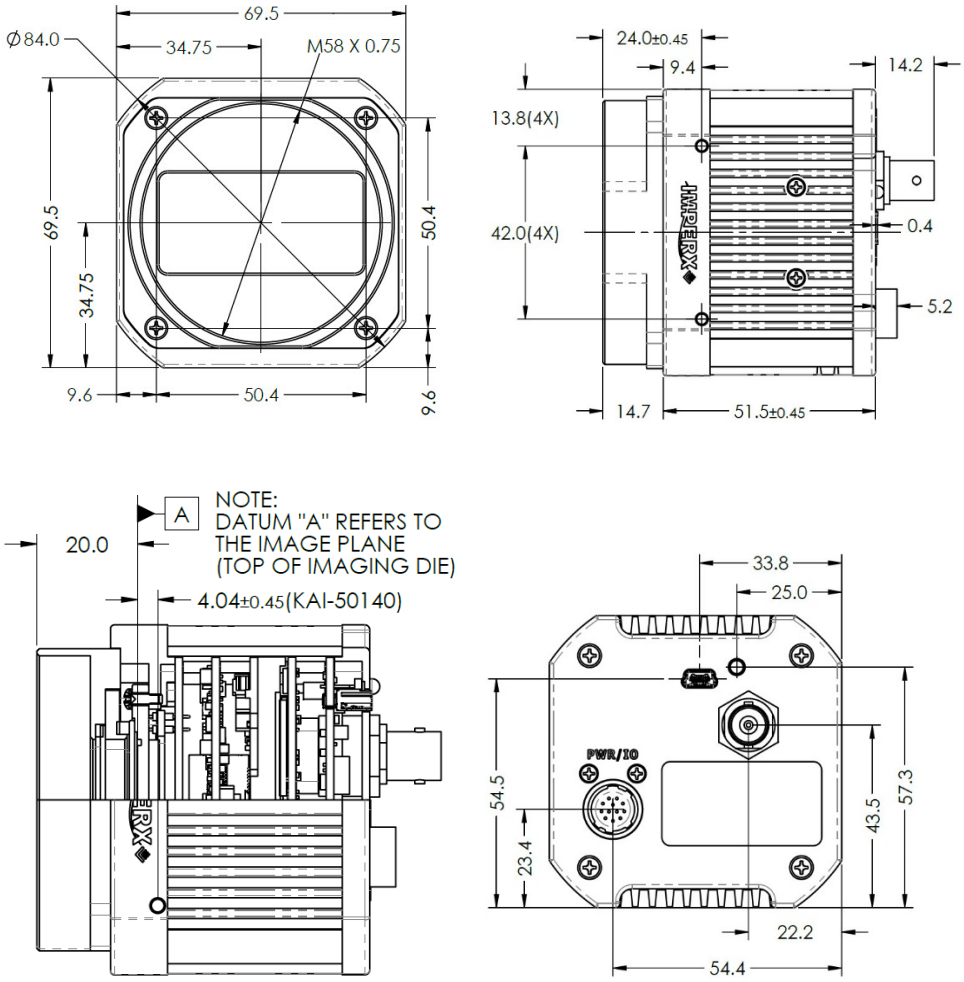

2.4.9 T9040 Camera with CoaXPress Output / Forced Air Cooling (Industrial)

The following mechanical drawings show front, side, and back views of the T9040 CoaXPress (CXP) camera with forced air cooling.

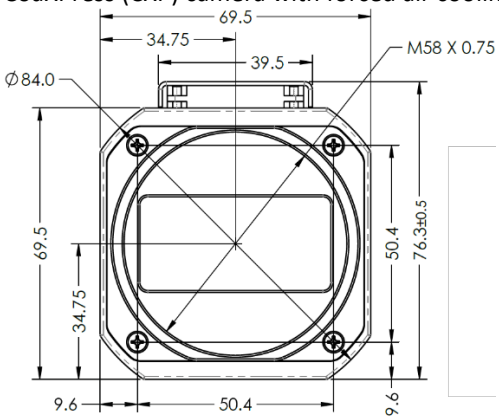

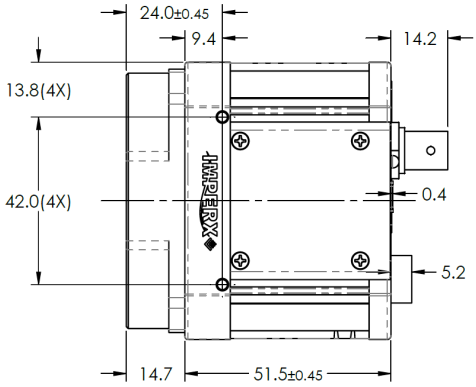

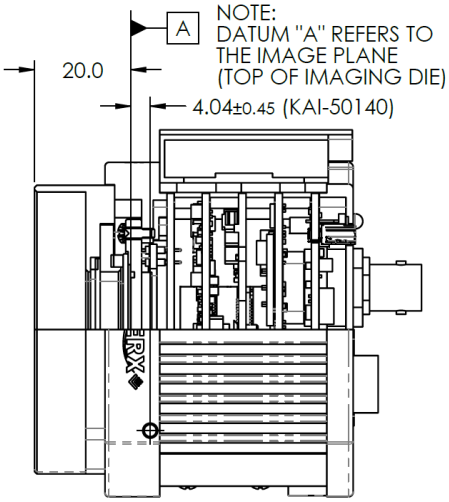

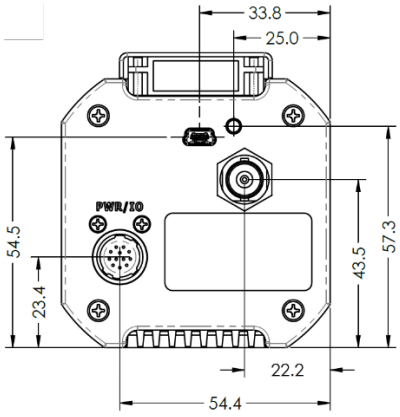

2.5 Optical

Specification	Optical Format	Lens Mount	Canon EF Lens Control
T9040	51.7 mm	M-58	Not available
T8820 / T8810	57 mm	M-72	Not available
T8040	43.3 mm	F-Mount, M42, EF Canon	Yes
T6641	43.3 mm	F-Mount, M42, EF Canon	Yes
T6640	43.3 mm	F-Mount, M42, EF Canon	Yes
T4940	32.3 mm	F-Mount, M42, EF Canon	Yes
T4840	43.3 mm	F-Mount, M42, EF Canon	Yes
T3640	32 mm	F-Mount, M42, EF Canon	Yes
T3340	4/3”	F-Mount, M42 C-Mount, EF Canon	Yes
T2040	4/3”	F-Mount, M42 C-Mount, EF Canon	Yes

Table 17: Optical specifications.

2.6 Spectral Response

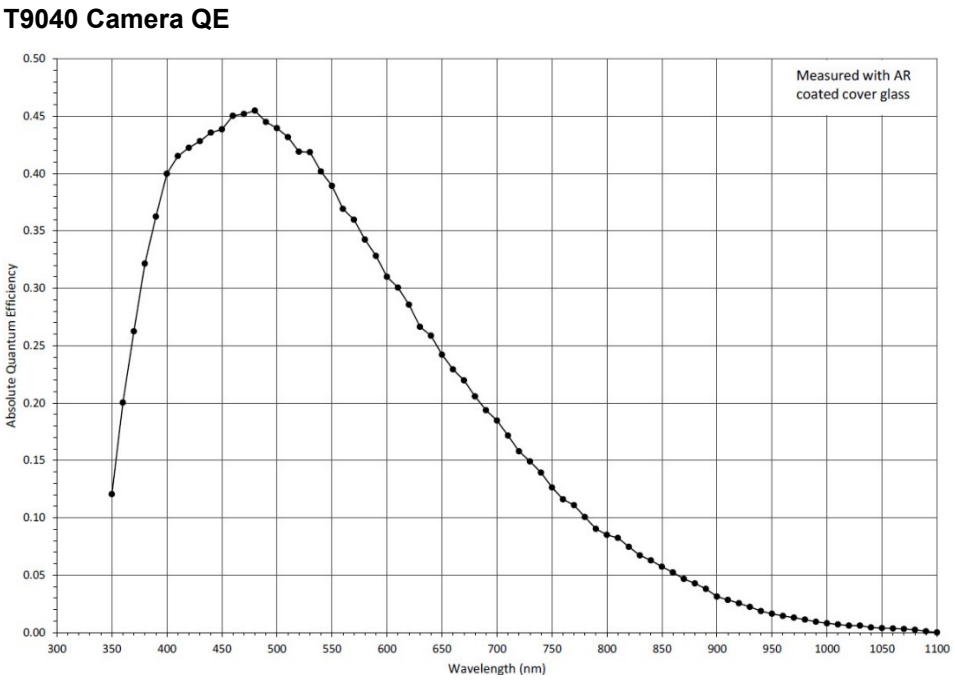

Figure 14: T9040 monochrome with micro lens.

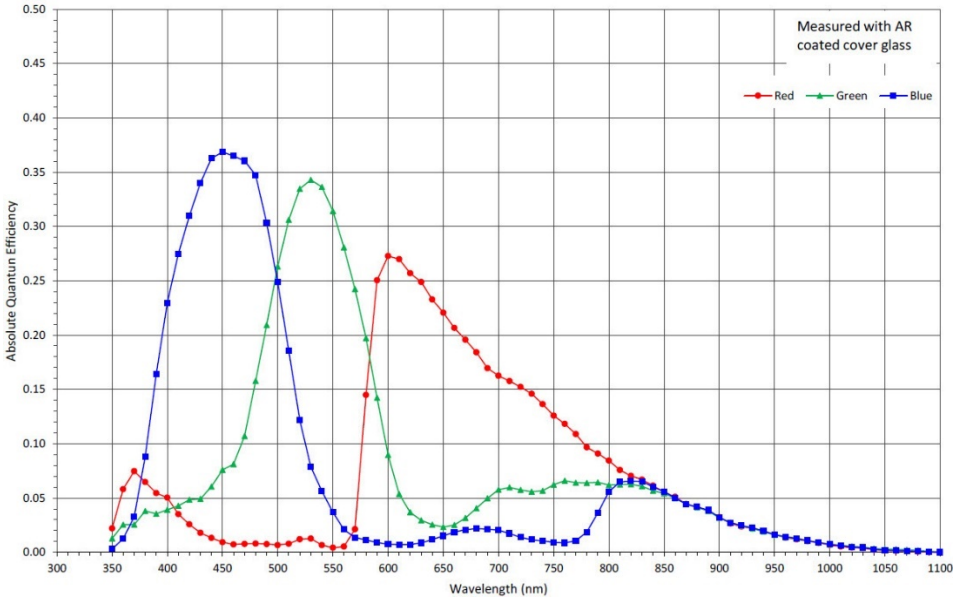

Figure 15: T9040 color (Bayer RGB) with micro lens.

T8810/T8820 Camera QE

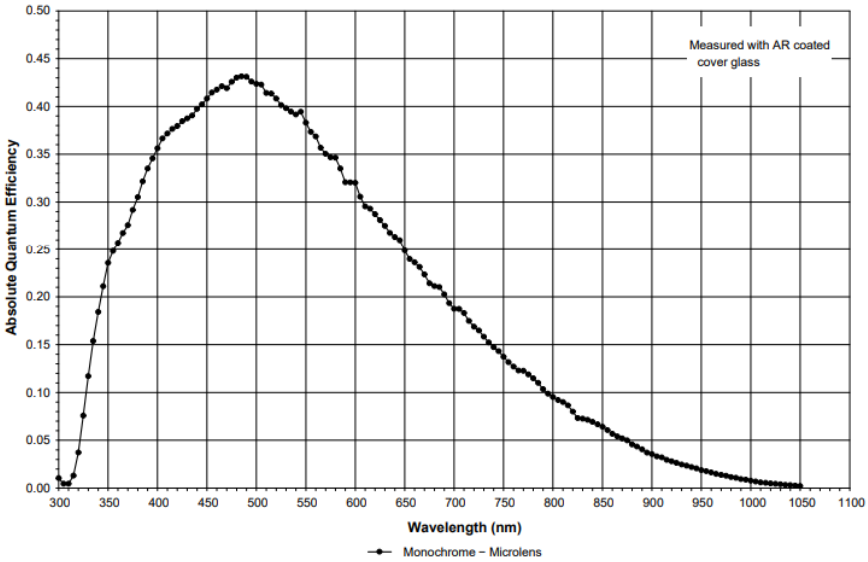

Figure 16: T8810/T8820 monochrome with micro lens.

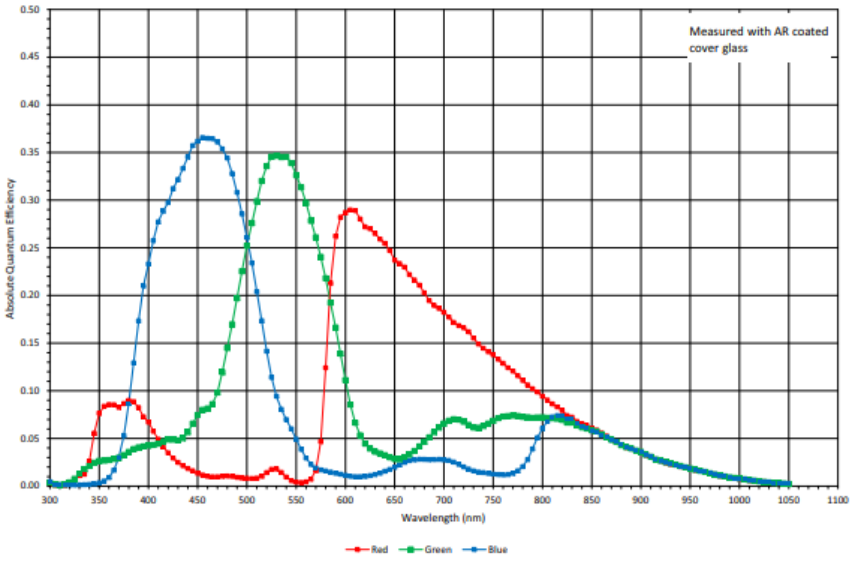

Figure 17: T8810/T8820 color (Bayer RGB) with micro lens.

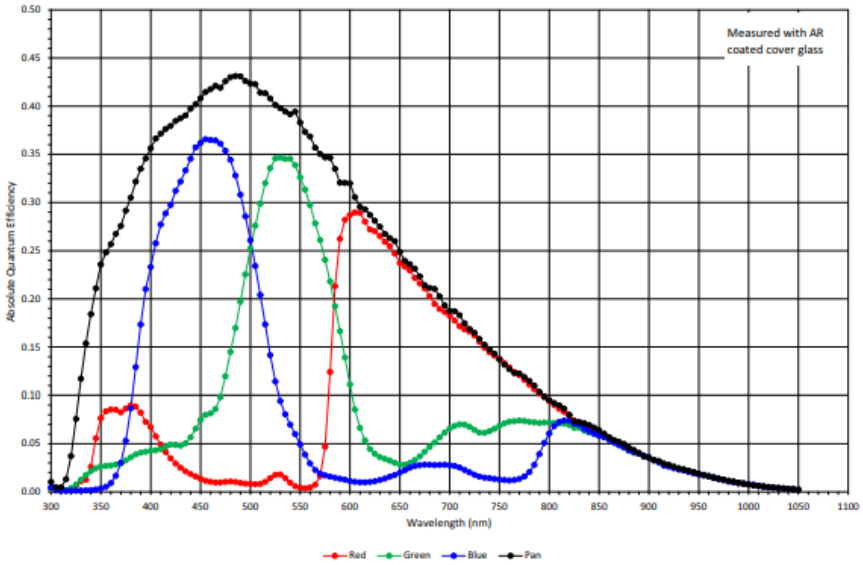

Figure 18: T8810/T8820 color (Truesense Sparse CFA) with micro lens.

T8040 Camera QE

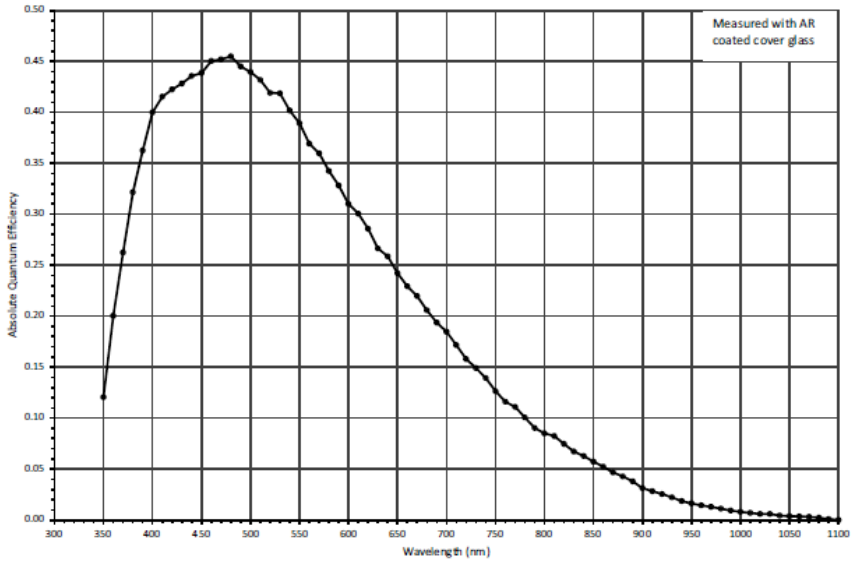

Figure 19: T8840 monochrome with micro lens.

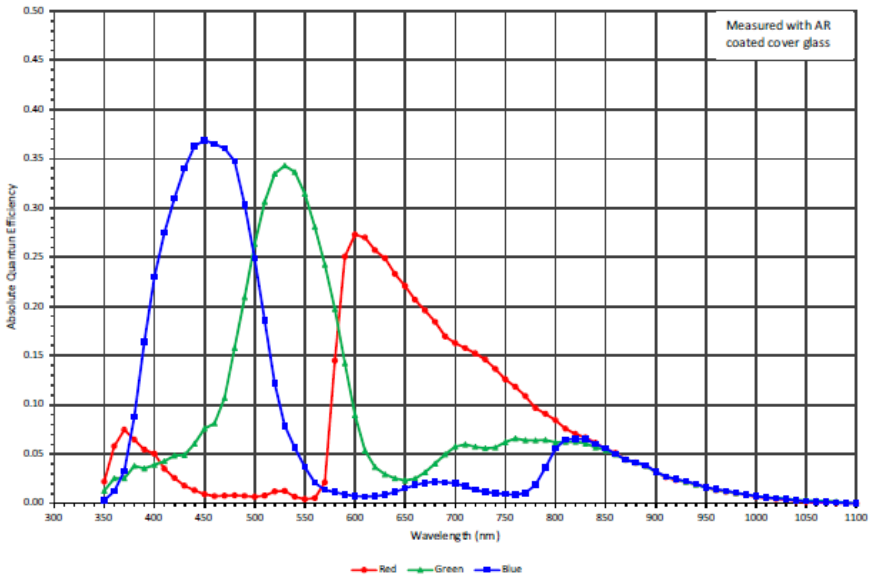

Figure 20: T8040 color (Bayer RGB) with micro lens.

T6641 Camera QE

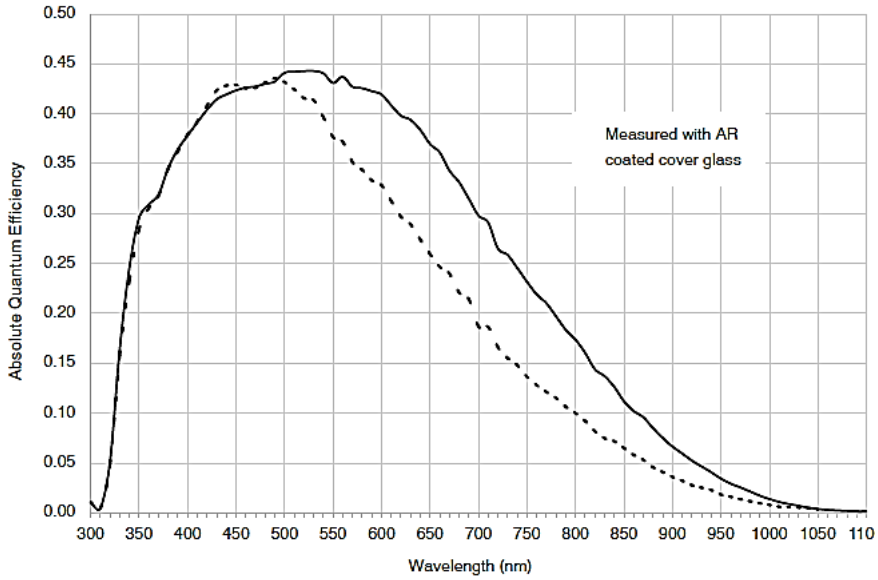

Figure 21: T6641 monochrome with micro lens.

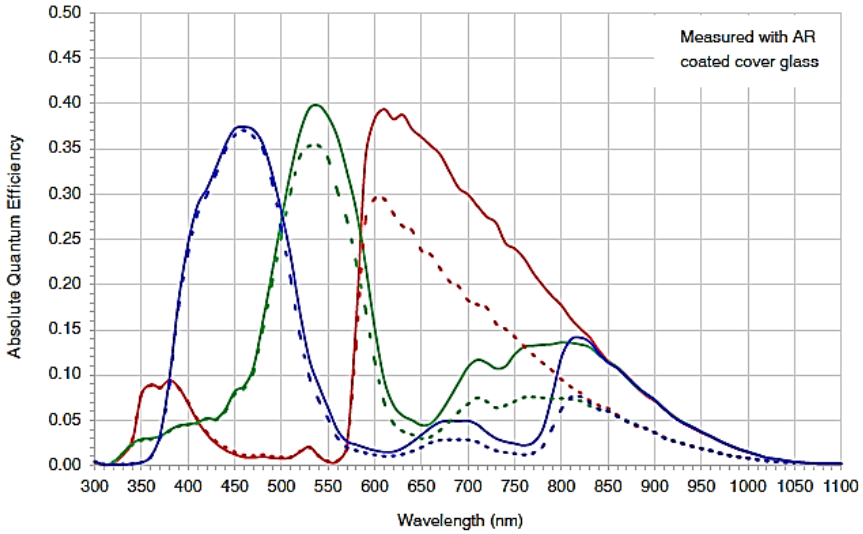

Figure 22: T6641 color (Bayer RGB) with micro lens.

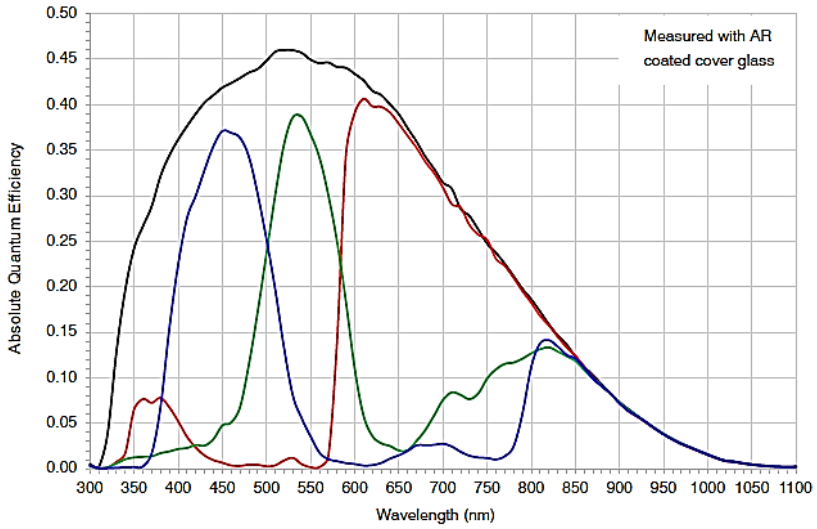

Figure 23: T6641 color (Truesense Sparse CFA) with micro lens.

T6640 Camera QE

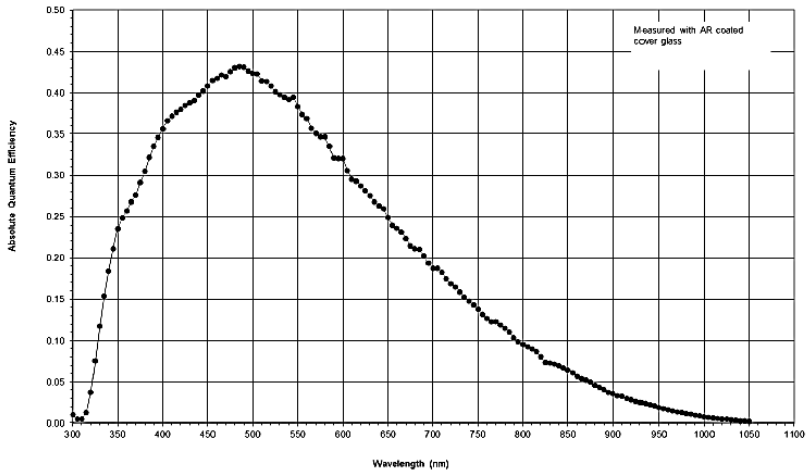

Figure 24: T6640 monochrome with micro lens.

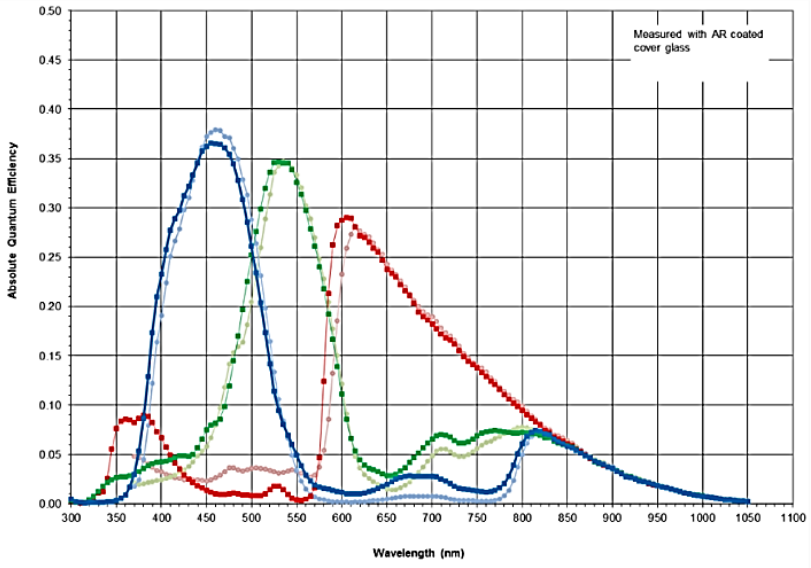

Figure 25: T6640 color (Bayer RGB) with micro lens.

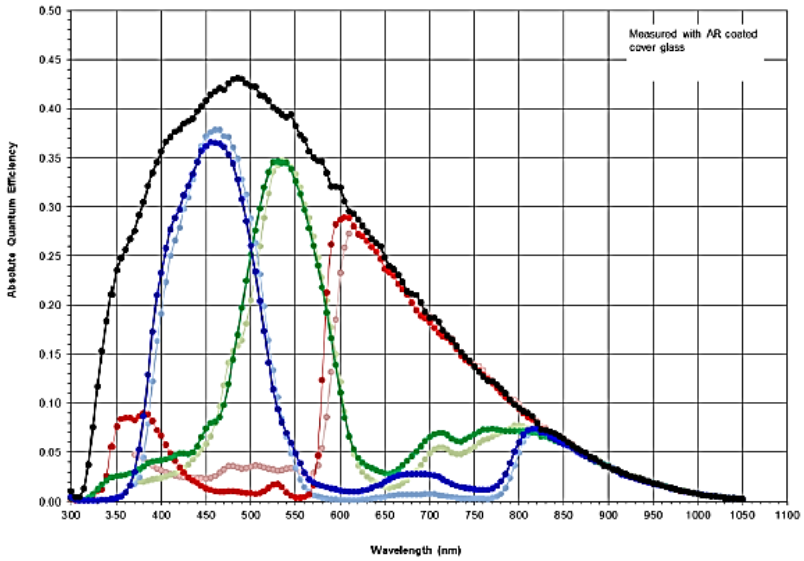

Figure 26: T6640 color (Truesense Sparse CFA) with micro lens.

T4940 Camera QE

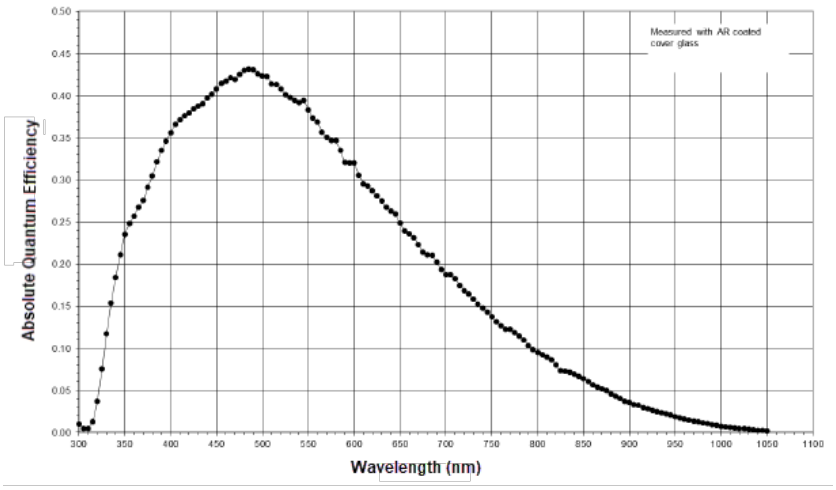

Figure 27: T4940 monochrome with micro lens.

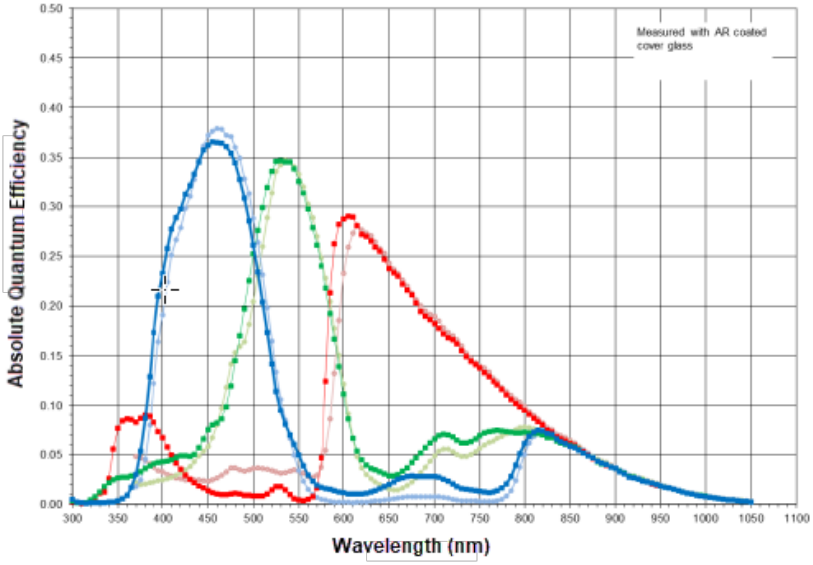

Figure 28: T4940 color (Bayer RGB) with micro lens.

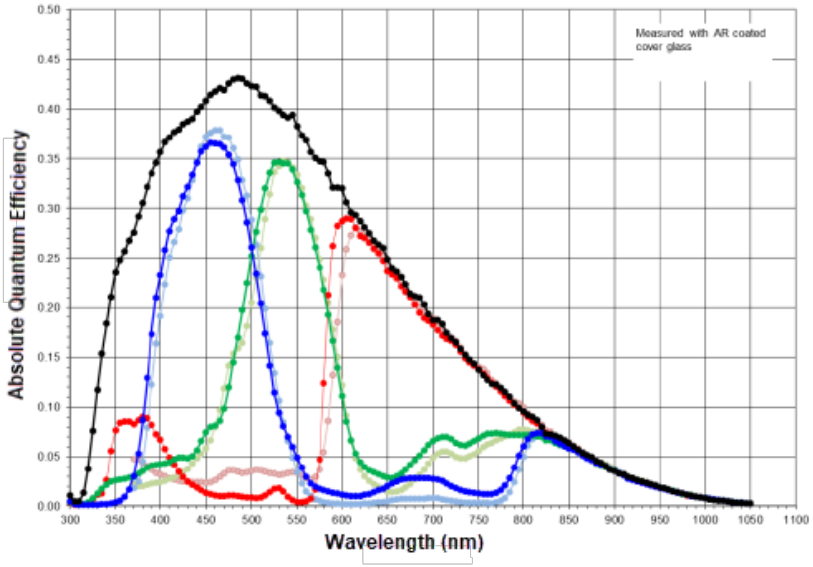

Figure 29: T4940 color (Truesense Sparse CFA) with micro lens.

T4840 Camera QE

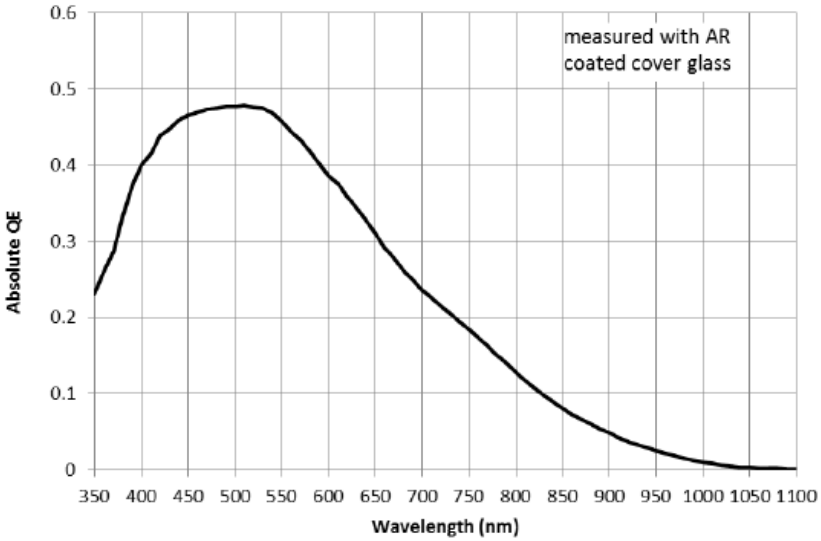

Figure 30: T4840 monochrome with microlens.

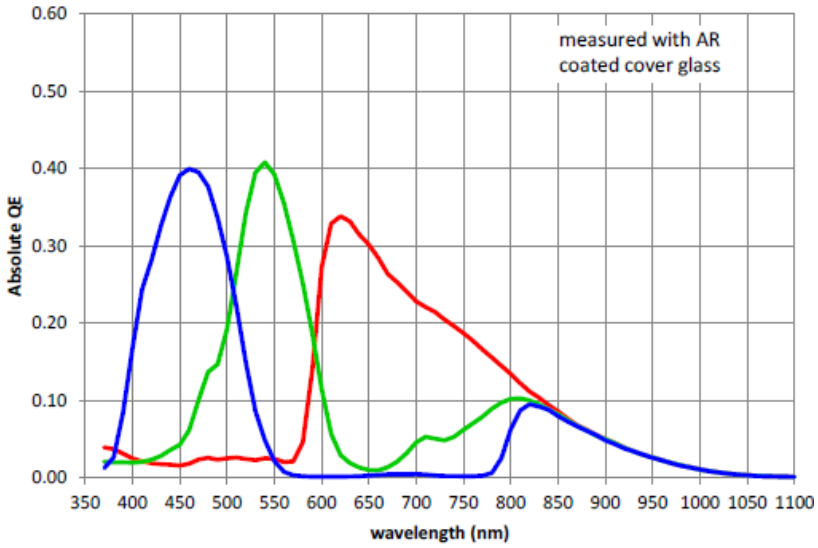

Figure 31: T4840 color (Bayer RGB) with micro lens.

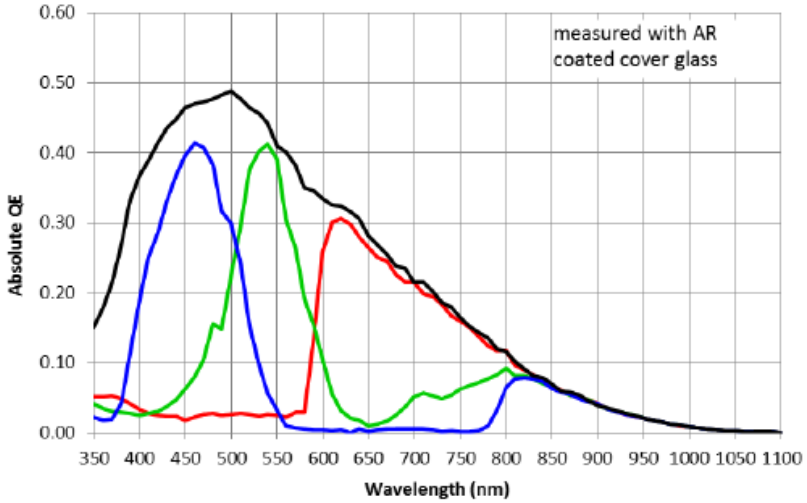

Figure 32: T4840 color (Truesense Sparse CFA) with micro lens.

T3640 Camera QE

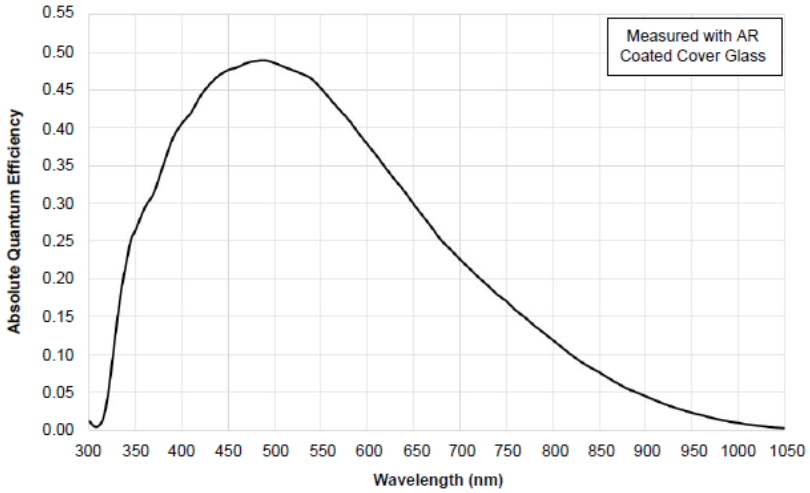

Figure 33: T3640 monochrome with micro lens.

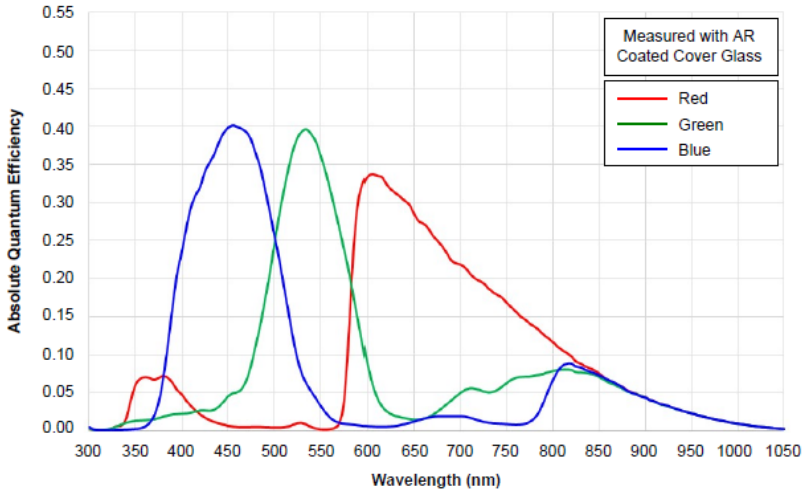

Figure 34: T3640 color (Bayer RGB) with micro lens.

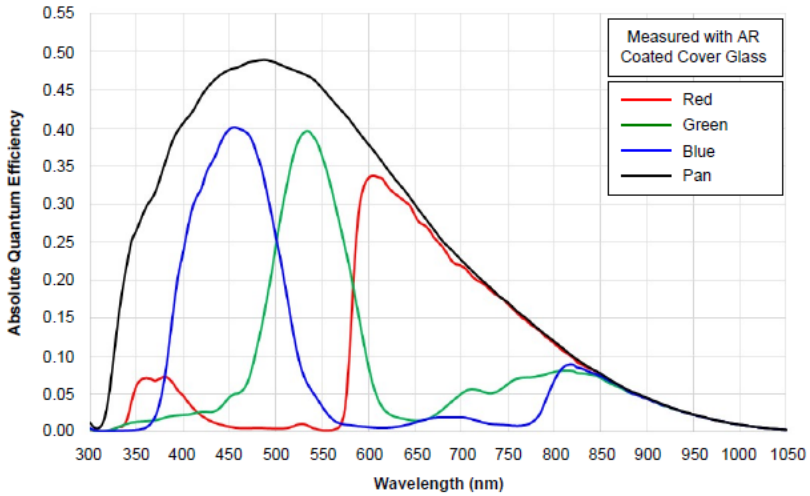

Figure 35: T3640 color (Truesense Sparse CFA) with micro lens.

T3340 Camera QE

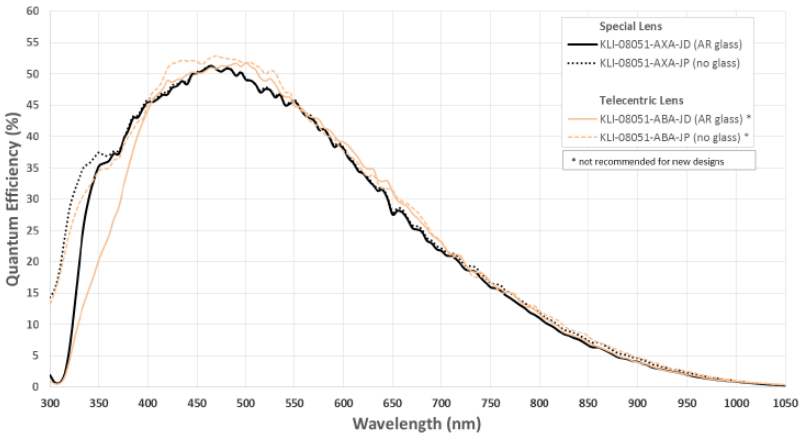

Figure 6. Quantum Efficiency: Monochrome with Microlens. Configuration with AR Glass and with No Glass.

Figure 36: T3340 monochrome with micro lens.

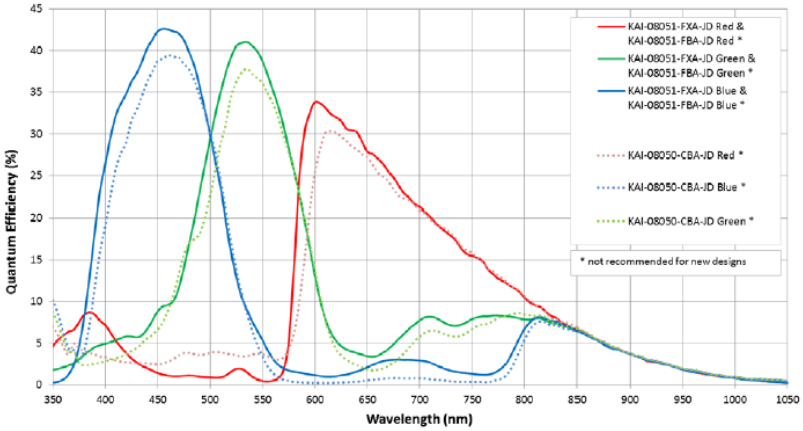

Figure 8. Quantum Efficiency: Color Bayer with Microlens and AR Glass Configuration. KAI-08051 compared to KAI-08050.

Figure 37: T3340 color (Bayer RGB) with micro lens.

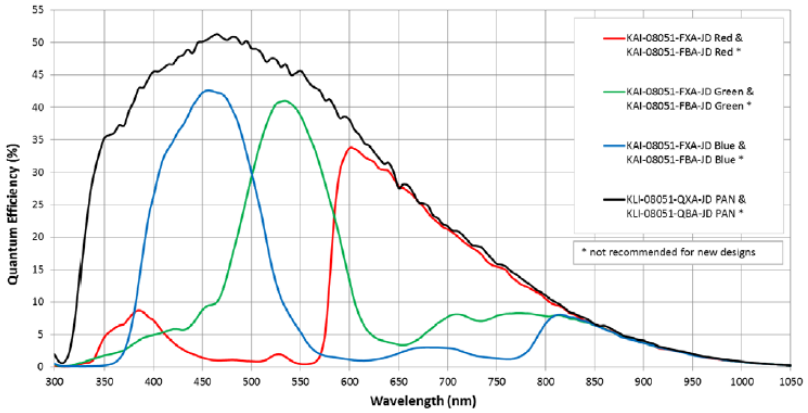

Figure 10. KAI–08051 Color (TRUESENSE Sparse CFA) with Microlens (MAR Glass) Quantum Efficiency

Figure 38: T3340 color (Truesense Sparse CFA) with micro lens.

T2040 Camera QE

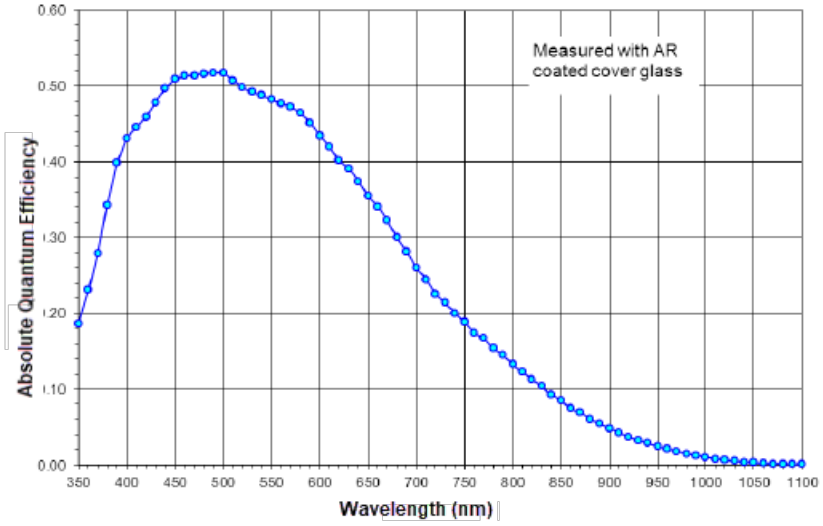

Figure 39: T2040 monochrome with micro lens.

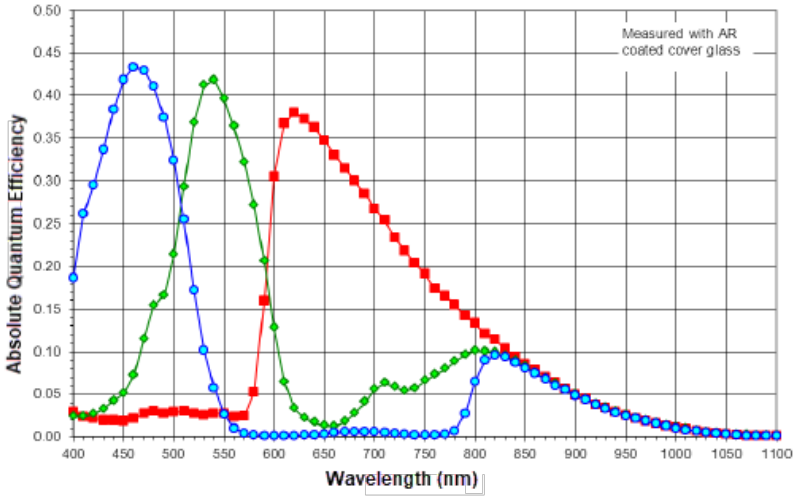

Figure 40: T2040 color (Bayer RGB) with micro lens.

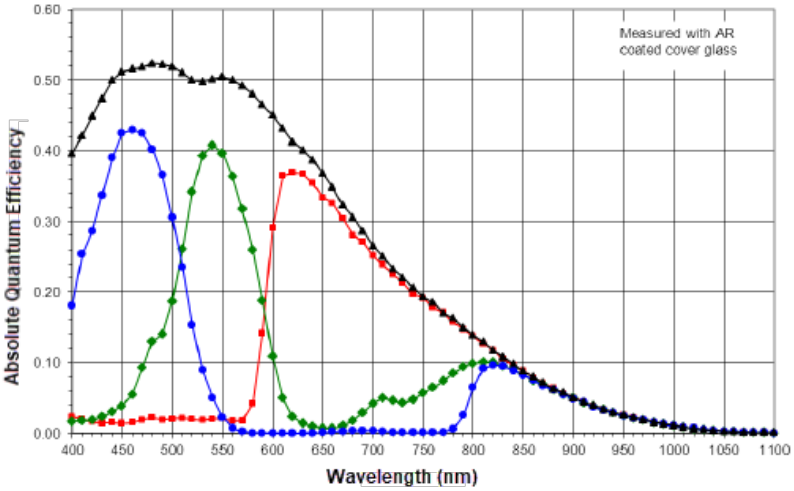

Figure 41: T2040 color (Truesense Sparse CFA) with micro lens.

2.7 Environmental

Ruggedized Tiger models operate in temperatures between -40 °C and +85 °C. Industrial Tiger models operate in temperatures between -10 °C and +60 °C. The relative humidity should not exceed 90% non-condensing.

TIP

Always keep the camera as cool as possible. Always allow sufficient time for temperature equalization if the camera temperature falls below 0°C! The camera should be stored in a dry environment with temperatures ranging from –50 °C to +90 °C (Ruggedized model).

CAUTION

1. Avoid direct exposure to moisture and liquids. The camera housing is not hermetically sealed and any exposure to liquids may damage the camera electronics!
2. Avoid operating in an environment without any air circulation, in close proximity to an intensive heat source, strong magnetic or electric fields.
3. Avoid touching or cleaning the front surface of the optical sensor. If the sensor needs cleaning, use soft lint free cloth and an optical cleaning fluid. Do not use methylated alcohol!

CAUTION

IMPERX advises users to take steps to avoid extreme over exposure conditions as damage from extreme over-exposure is not covered by IMPERX warranty. Extreme over-exposure can occur from:

1. Extremely bright, short duration sources (LASERs)
2. Direct Sun Exposure

2.8 Forced Air Cooling

Tiger cameras T9040, T8040, T6640, T6641, T4940, T4840, T3640, T3340, and T2040 support an optional fan for added cooling. The following specifications define the electrical and mechanical characteristics of the fan. The fan motor is one phase, eight poles.



Figure 42: An optional fan attaches to the top of the small body Tiger camera.

Optional Fan	Description
Rated voltage	5 VDC
Operation voltage	4.0 – 5.5 VCD
Input current	0.15 (Max 0.23) A
Input power	0.75 (Max. 1.15) W
Speed	8500 R.P.M (+10%, -15%)
Max. air flow (at zero static pressure)	0.060 (Min. 0.048) M 3/ Min. 2.12 (Min. 1.70) CFM
Max. air pressure (at zero airflow)	11.25 (Min. 7.20) mmH_20 0.443 (Min. 0.283) inchH_20
Acoustical noise (avg.)	31.0 (Max. 36.0) dB-A
Insulation type	UL: Class A
Insulation strength	10 Meg OHM Min. at 500 VDC (between frame and + terminal)
Dielectric strength	5mA Max. at 500 VAC 60 Hz one minute (between frame and + terminal)
External cover	Open type
Life expectancy	30,000 hours continuous operation at 40° C with 15 ~65 %RH
Rotation	Counterclockwise direction from front view of air flow inlet
Insulation type	UL: Class A

Optional Fan	Description
Lead wire	UL 1571 AWG #28: Black wire negative (-); Red wire positive (+)
Dimensions	See dimension drawings
Weight	11 g
Operating temperature	-10 °C to +70 °C (-40 °C to +75 °C storage)
Operating humidity	5 to 90% HR (5 to 95% HR storage)

2.8.1 DC Fan Dimensions

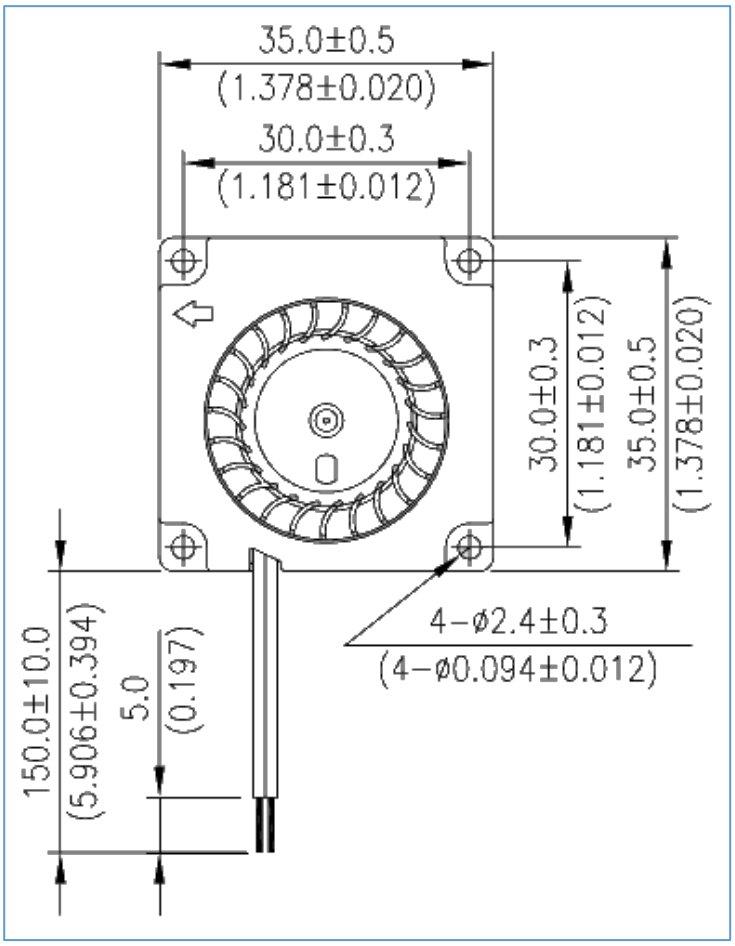

Figure 43: DC fan dimensions, overhead view.

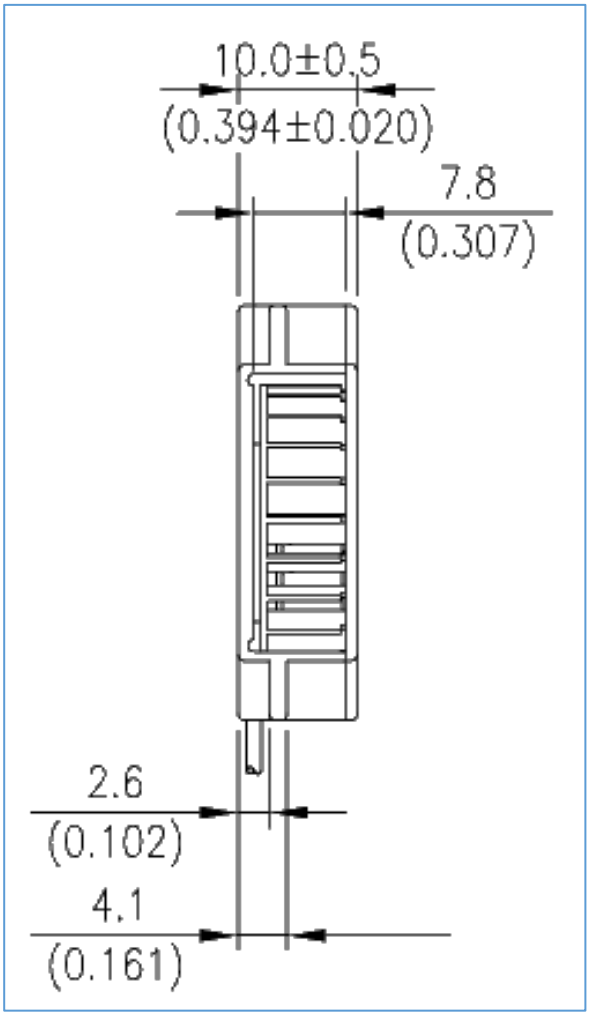

Figure 44: DC fan dimensions, profile view.

CAUTION

1. Use caution when handling fan. Damage may be caused when pressure is applied to the impeller, if the fan is handled by the lead wires, or if the fan is dropped.
2. It is very important to establish the correct polarity before connecting the fan to the power source. Positive (+) and Negative (-). Damage to the fan might result if connection is with reverse polarity, as there is no foolproof method to protect against such error.
3. Incorrect mounting of fans could cause excess resonance, vibration and subsequent noise.
4. Fans are not suitable where any corrosive fluids are introduced into their environment.
5. Ensure all fans are stored according to the storage temperature limits specified.
6. Make sure the camera mounting does not obstruct the air flow.

2.8.2 Replacing the Fan

The optional fan for the Industrial version of the camera is factory-installed. Replacement fans are available by contacting Imperx.



Figure 45: T6640 camera with optional fan.

To replace the fan:

1. Remove the four screws M2X10mm holding the existing fan in place.
2. Gently pull the fan wires out from between the CL EXT and CL LC boards and unplug the wire connector from the terminal connector on the controller board (Figure 46).

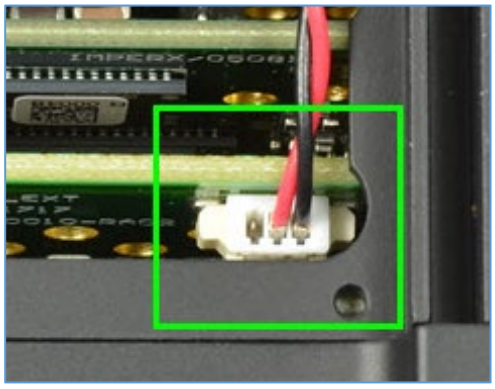

Figure 46: Unplug existing fan connector.

3. From the replacement fan ①, insert the wire connector into the terminal connector on the controller board ② (Figure 45).



Figure 47: Attach fan connector to controller board.

Note: make sure the connector is properly installed and locked.

4. Tuck the fan wires between the CL EXT and CL LC boards ③ and position the fan for mounting (Figure 48).
5. Secure the fan with screws ④.

Note: Be careful not to overtighten the screws and damage the fan.

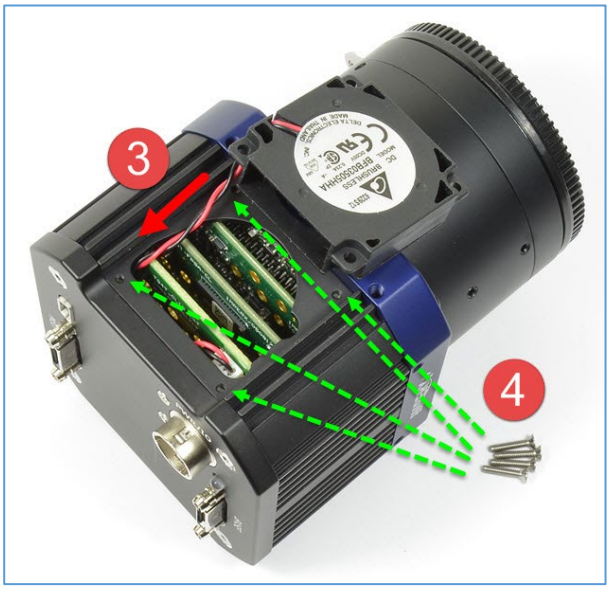

Figure 48: Securing fan to camera.

3 Camera Link Configuration

3.1 Overview

Camera configuration software (CamConfig) ships with the Camera Link series cameras. After installing the software, you can program the camera, change settings, and save the settings in a file or in the camera. The software provides a help file to assist in setting up the camera.

The Graphical User Interface (GUI) provides the following:

1. A compact design that saves space when using the same computer to display images and control your system.
2. Real time data on key camera information and camera configuration status.
3. Dockable menus for Gain, AOI, Trigger, and so on.

3.2 Installing Camera Link Configurator Software

Install the Tiger Camera Configurator (CamConfig) software on the host computer. The installer walks you through the procedure.

CAUTION

Before completing the installation, remove any previous Tiger CamConfig versions installed on your computer. The installer helps you remove previous versions, or you can remove them on your own using the following procedure:

1. Open Control Panel on your computer.
2. Select Programs and Features.
3. Select the software from the list.
4. Click **Uninstall**.

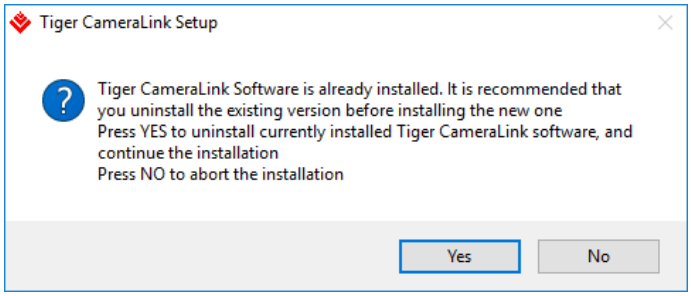

Figure 49: The installer helps you to remove existing copies.

5. From the media shipped with your camera, transfer the software program (`Tiger_CL_Z_Y_W_xxxx.exe`) to your computer. If the Security warning appears, click **OK** to continue.

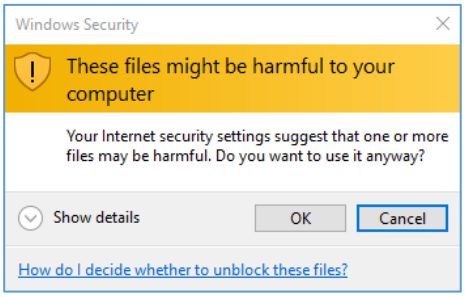

6. Double click the executable file (`Tiger_CL_Z_Y_W_xxxx.exe`) from its location on your computer. The Welcome screen appears. Click **Next** to continue.



7. On the License screen, read the terms and click **I Agree** to continue.

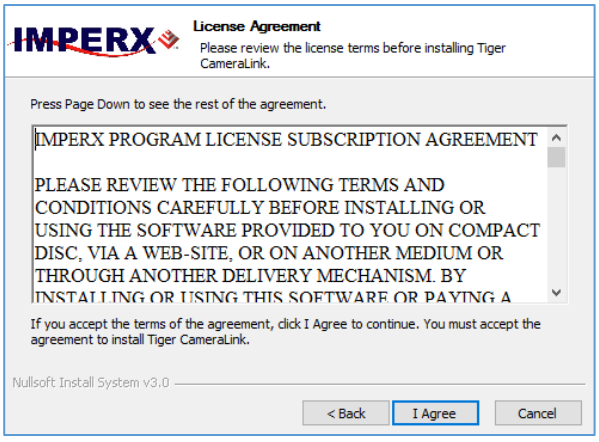

8. On the Choose Components screen, verify the correct Tiger camera component is selected and click **Next** to continue.

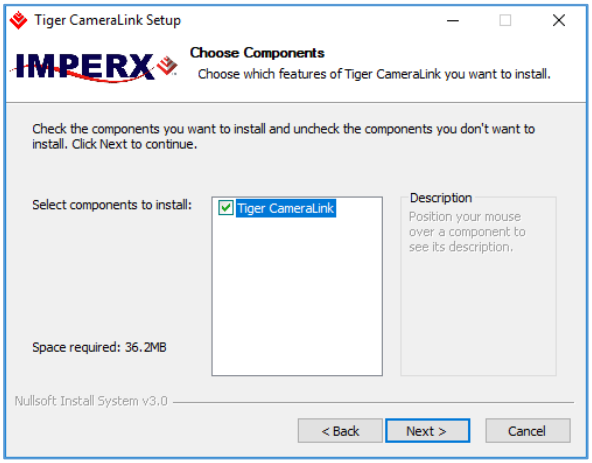

9. On the Choose Install Location screen, accept the default destination folder or click **Browse** and select a different location and then click **Install.** The installer prompts you to uninstall any existing versions of the software from your computer before continuing the installation.

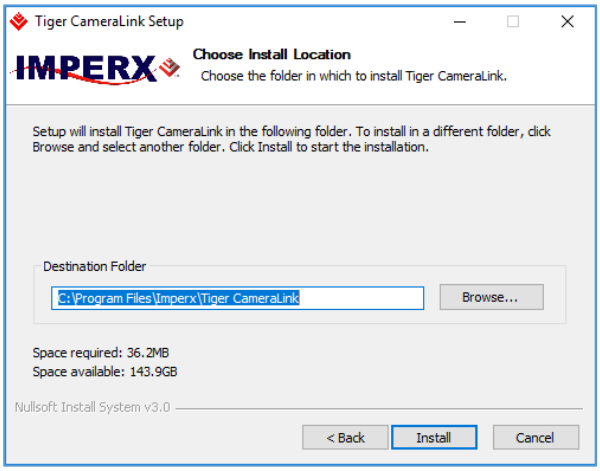

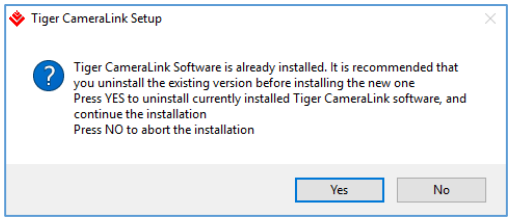

10. On the Installation Complete screen, select the check box to register your software and then click **Next**. When the Imperx website appears, complete the Subscriber Registration and click **Submit**. The Completing Tiger Camera Link Setup screen appears.

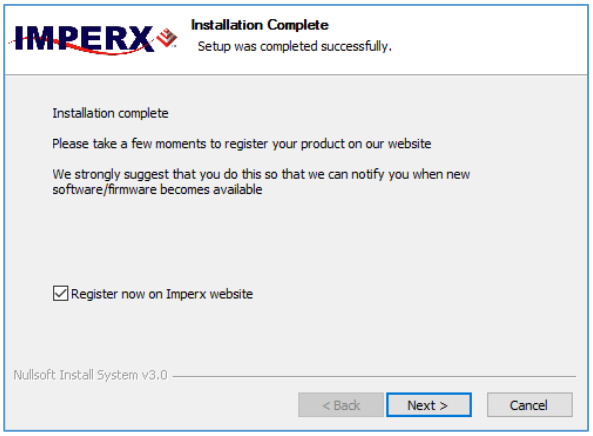

11. On the Completing Tiger Camera Link Setup screen, click **Finish**. The Tiger Configurator icon appears on your desktop.

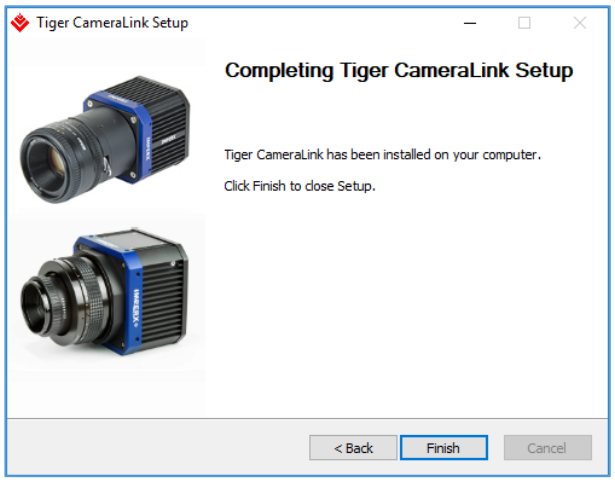

3.3 Starting CamConfig

When you start the Tiger configurator software, it searches for any available COM ports installed on the host computer. It communicates with each COM port and attempts to query the attached camera. If the software detects an attached Imperx Tiger camera, it displays the port and camera type on the Select Port screen. You can repeat the discovery procedure by clicking Rescan Ports.

To start the Tiger Configurator GUI:

1. Install the configurator software (refer to 3.2 Installing Camera Link Configurator Software).
2. Locate the Tiger Configurator shortcut icon on your desktop.
3. Double click the shortcut.
4. The Select Port screen appears.

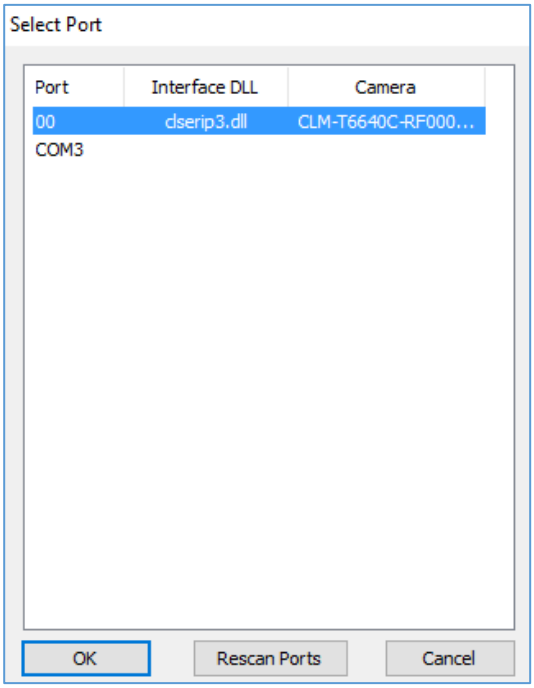

Figure 50: Select Port screen.

To select a camera for configuration:

1. Open the CamConfig software.
2. On the Select Port screen, select the camera of interest.
3. Click **OK**. The CamConfig Main window opens.

TIP

If the software does not find your computer's COM ports, you might need to locate your frame grabber's DLL file and move it to C:\Windows\System32. You can search File Explorer for the DLL file by entering clser* in the search field. **Note**: your frame grabber's vendor name abbreviation should appear where XXX is shown in the clserXXX.dll file name.

3.4 Main Window

The CamConfig main panel appears after you select a camera. It provides menu and view options, a help file, camera information, and configuration options. The camera's name and status appear at the bottom of the main window.

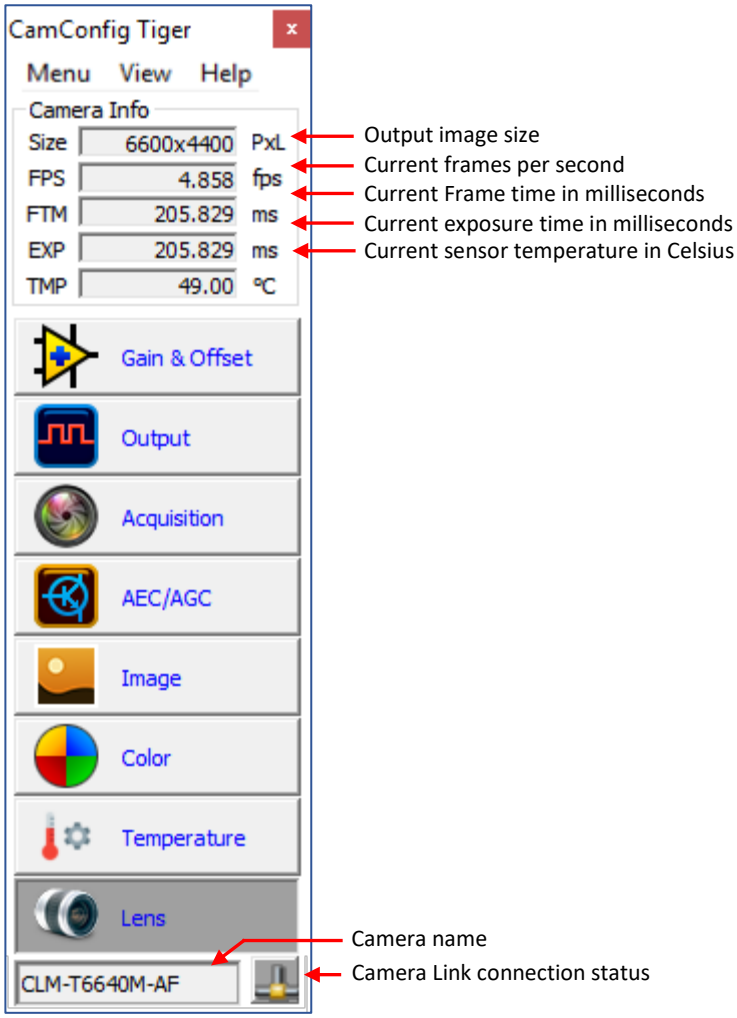

Figure 51: CamConfig main window.

3.4.1 Camera Configuration Memory

Tiger cameras have built-in configuration memory divided into the following segments: one workspace, one factory space, and four user spaces (#1, #2, #3, and #4).

The workspace is RAM based memory containing the current camera settings when the camera is powered up and operational. It also holds the camera registers. The registers are programmable, and you can retrieve them by issuing commands. At power down, the camera clears all registers.

The factory space is ROM based and write protected. It contains the camera's default configurations. This space is programmed at the factory with the default configuration.

User space #1, user space #2, user space #3, and user space #4 are non-volatile, flash memory. They store user-defined camera configurations. Upon power up, the camera loads the workspace registers from the factory-space or from user space #1, user space #2, user space #3, or user space #4 as determined by the boot control register stored in the configuration memory. The boot control register is programmable. At any time, you can instruct the camera to load its workspace with the contents of the factory-space, user space #1, user space #2, user space #3, or user space #4. Similarly, you can instruct the camera to save the current workspace settings to user space #1, user space #2, user space #3, or user space #4).

The non-volatile parameter flash memory also contains the following image enhancement tools:

- Bad Pixel Map (BPM 1 and BPM 2)
- Flat Field Correction Coefficients (FFC1, and FFC2)
- LUT 1, LUT 2, LUT 3 and LUT 4

You can use these image enhancement files loaded by the factory or you can create your own BPM, FFC, and LUT tables and upload them to the parameter flash memory using the Camera Configurator graphical user interface.

3.4.2 Menu Options

The Menu provides access to load options, settings, the command terminal, and more.

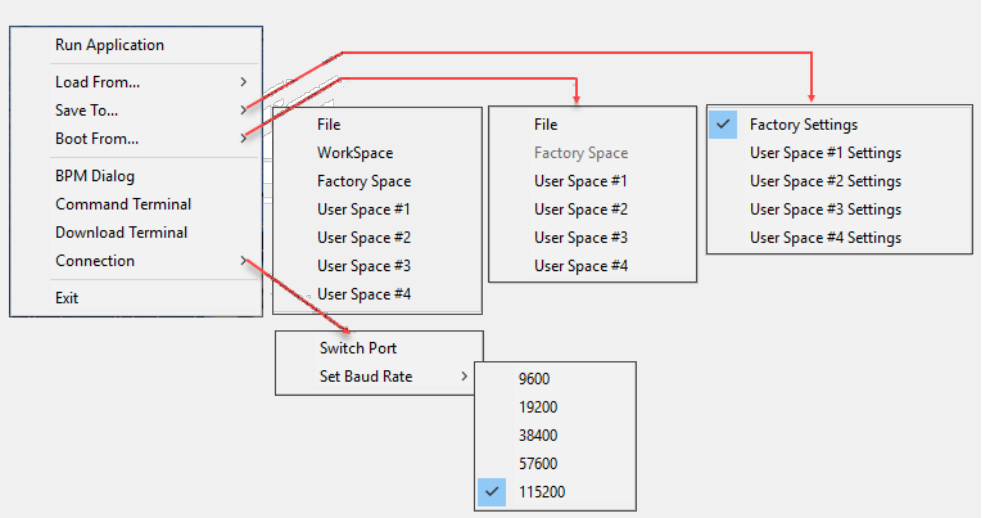

Figure 52: Main window menu options.

The status indicator next to the camera name turns red if the connection between the camera and host computer is lost.

3.4.2.1 Run Application

This menu starts any executable file that you normally use, such as a frame-grabber application. CamConfig remembers the path of the last opened file.

3.4.2.2 Load From . . .

This menu option loads camera registers from a saved configuration space. Load options are:

- **File** - Loads camera registers from a saved configuration file.
- **Workspace** - Update the software with the current camera workspace settings.
- **Factory** - Loads the camera registers with the original factory settings.
- **User Space #1** – loads the camera registers with settings in the user space 1.
- **User Space #2** – loads the camera registers with camera settings in the user space 2.
- **User Space #3** – loads the camera registers with camera settings in the user space 3.
- **User Space #4** - Loads the camera registers with settings saved in user space 4.

3.4.2.3 Save To . . .

The Save To function saves the camera registers to a configuration space. The following options are available:

- **File** – saves the current camera settings to a configuration file
- **User #1** – saves the current camera settings to the camera User space 1.
- **User #2** – saves the current camera settings to the camera User space 2.
- **User #3** – saves the current camera settings to the camera User space 3.
- **User #4** – saves the current camera settings to the camera User space 4.

3.4.2.4 Boot From . . .

When powering up, the camera, loads a configuration to the camera registers. You can use the Boot From function to specify the configuration to load on power up. Your options are Factory Settings, User Space #1, User Space #2, User Space #3, or User Space #4.

3.4.2.5 BPM Dialog

The BPM Dialog shows bad pixel maps coordinates from factory and user maps. (Figure 53). The maps are stored in the camera's non-volatile memory and read out when running defective or hot pixel correction.

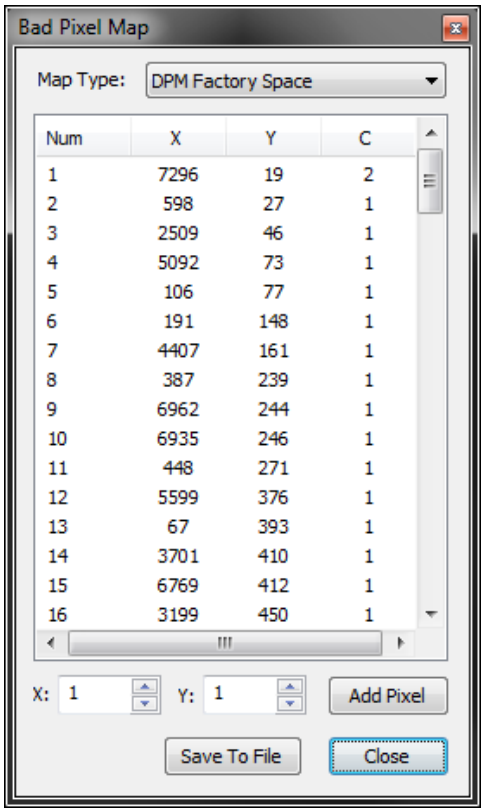

Figure 53: BPM dialog.

- **Map type** – selects what type of defect pixel map to show:
  - **DPM (Defective Pixel Map)** – a map of pixels with sensitivity that deviates more than 15% due to fluctuations in the CMOS manufacturing process.
  - **HPM (Hot Pixel Map)** – a map of pixels that during normal camera operation are normal, but in long integration modes (programmable frame time) behave as high-intensity bright pixels.
- **Add Pixel** – you can add a defective or hot pixel into DPM or HPM by entering its location
  - **X and Y** – horizontal and vertical coordinates of the defective pixel.
- **Save To File** – saves the map shown in Defect Pixel Map window into a .dmp or .hpm file.

TIP

If you are adding more than one defective pixel into DPM or HPM, we recommend to do the following steps:

1. Save a map that you want to add pixels to on your computer by clicking on **Save to File**. The file will have extension .dpm or .hpm.
2. Open the file using any standard ASCII text editor, Microsoft Notepad, or Microsoft Excel.
3. Add defective pixels, save changes and close the file.

4. Select **Menu** > **Download Terminal** on GUI.
5. Click **File Type** and select a file **DPM** or **HPM**.
6. Enter or browse to the location of the file that you saved in step 3.
7. Select the file you want to download.
8. Click **Load File**.
9. Reboot the camera and restart the GUI for the changes to take into effect.

3.4.2.6 Command Terminal

The Command Terminal provides direct communication with the camera and shows information about all commands sent to or received from the camera.

You can type commands directly in the text box on the Command Terminal screen. Commands must start with 0x followed by ”52” to read or “57” to write, followed by 16-bit Register ADDRESS and 32-bit DATA without spaces (all data and addresses are hexadecimal).

For example, reading register 0804 is string: 0x520804. Writing decimal 10 to register 6002 is string: 0x5760020000000A.

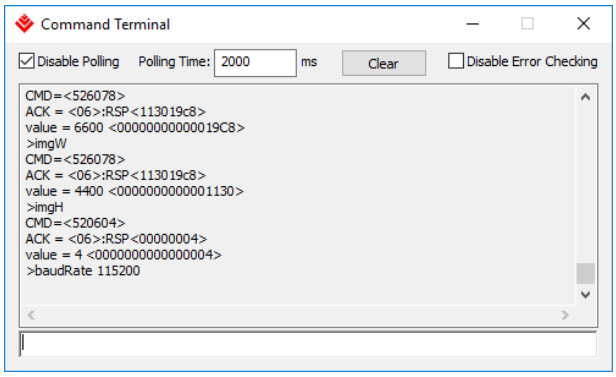

Figure 54: Command Terminal.

The software polls the camera for frame time, exposure time, frames rates, and other information based on the time indicated in the Polling Time field. You can change the polling frequency by entering a different time (in milliseconds).

All commands issued when using the software GUI are echoed on the command Terminal. This can be a useful debugging tool when developing your own software controls.

The Command Terminal provides the following functions:

- A text field at the bottom of the screen for entering commands.
- Ability to clear the log of all command and data communications.
- A check box to disable polling.

3.4.2.7 Download Terminal

The Download Terminal lets you upgrade the camera's firmware and upload any custom files — BPM, Flat Field Correction (FFC), Lookup Tables (LUT), or Register Set (RGS).

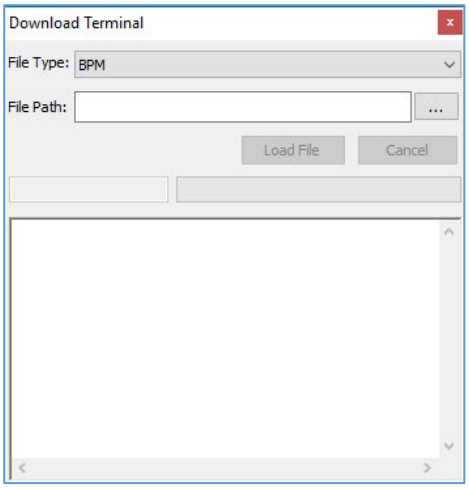

Figure 55: Download Terminal.

To download files to the camera:

1. Click **File Type** and select a file type such as BPM, or LUT1/LUT2.
2. Enter or browse to the location of the file on your computer.
3. Select the file you want to download.
4. Click **Load File**.
5. Reboot the camera and restart the GUI for the changes to take into effect.

3.4.2.8 Connection

Use the Connection menu to switch ports or change baud rates.

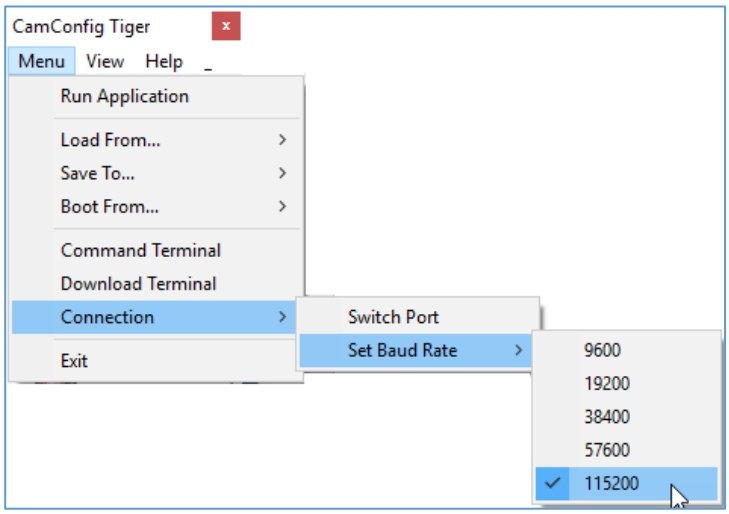

Figure 56: Connection options and settings.

Switching ports lets you switch to a different camera. You can also rescan ports from the Select Port screen to locate cameras.

To switch ports:

1. Click **Menu**.
2. Select **Connection**.
3. Click **Switch Port** and select a different port.

Setting baud rates lets you determine the speed of data transmission. A higher baud rate number indicates the transfer of more bits per second.

To set baud rates:

1. Click Menu.
2. Select Connection.
3. Click Set Baud Rate. Options are 9600, 19200, 28400, 57600, and 115200. The factory default is 115,200.

3.4.3 View Options

Use the View menu to display or hide the following panels on the main CamConfig GUI window:

View Menu Options	
Gain & Offset	Controls the camera analog gain, digital gain, offset, and tap balancing.
Output	Maps the camera output signals. Enables and provides controls over the camera strobe signals and the internal pulse generator (if available).
Acquisition	Controls the camera triggering features and the exposure
AEC/AGC	Automatic Exposure and Gain Controls – Not active for Industrial version cameras.
Image	Sets the areas of interest, H and V binning modes, test pattern generator, BPC, FFC, controls and output data format – bit depth and bit shift.
Color	Sets the gain and offset for the primary R G B colors. Sets the white balance mode. Displays WBC values.
Temperature	Provides control over the forced air cooling of the camera and sensor (if forced air cooling is implemented in the camera).
Select All	Selects or deselects all panels.
Attach Window	Attaches all camera parameter windows to the main GUI window.

Table 18: Menu option descriptions.

3.4.4 Help Menu

The Help menu opens an interactive file and provides camera manufacturing information. You can also put the GUI in debug mode for test purposes and troubleshooting.

3.5 Camera Link Configuration Screens

The Camera Link configuration screens in this section of the manual are based on the small Tiger cameras (T2040, T3340, T3640, T4840, T4940, T6640, T6641, and T8040).

Where configuration differences exist between small Tiger and large Tiger cameras, the manual provides the following NOTE icon and an explanation: **NOTE**

3.6 Gain & Offset Control

Tiger cameras provide independent analog gain and offset control over each tap output. Use the Gain & Offset screen to control the digital gain parameters, digital offset parameters, and tap balance.

NOTE

The number of taps shown on the camera's Gain & Offset configuration screen is based on the number of CCD output taps available in your camera. The T8820 camera has 16 CCD output taps; the T8810 has 8 CCD output taps. All other Tiger cameras have 4 CCD output taps. The following screen shows Gain & Offset configuration for a 4-tap Tiger camera.

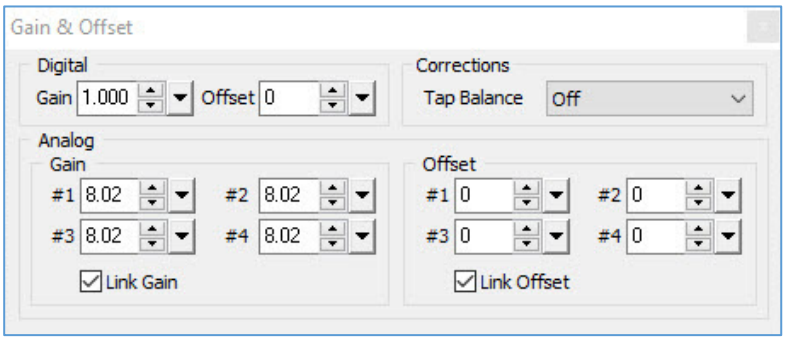

Figure 57: The Gain & Offset screen provides analog and digital gain.

Analog Gain. Analog gain amplifies the image signal before converting the signal to digital data. You can set the analog gain from 0 to 30dB (Ruggedized cameras) or 0 to 24dB (Industrial cameras) and shift the signal using offset from 0 to 25% of dynamic range in 4095 steps.

The Link Gain check box links all four output taps so that changing the value on one analog gain parameter changes all analog gain parameters to the same value. The Link Offset check box provides the same linking capability for Offset parameters.

Digital Gain. You can set the digital gain from 1.0x to 4.0x in 0.001x-step changes and digital offset from +/- 12.5% of dynamic range in 1024 steps (-512 to +511 in 1-step increment).

Corrections – Tap Balance. Tap balance correction uses algorithms in the firmware to correct misbalances that might occur between the camera's separate output video signals. It compares the values between the adjacent taps and adjusts the corresponding tap gains to equalize the average values. In multi-tap cameras, tap balance helps ensure a uniform image. Click the Correction Tap Balance drop-down to enable tap balance.

3.7 Output Control

The Output Control panel lets you map camera output signals to strobes and control the internal pulse generator settings (if available).

NOTE

The number of available outputs and strobes shown on the camera's Output Control configuration screen depends on the camera you are configuring. The following screen shows the Output Control screen for a Tiger camera offering two outputs and two strobes.

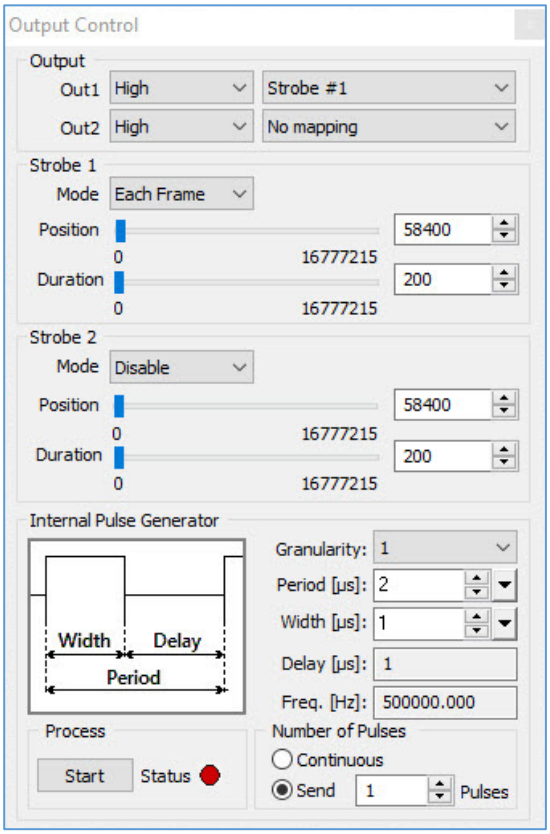

Figure 58: Output Control screen.

3.7.1 Output Mapping

You can map outputs to internal control signals and set the active signal level to either high or low. The ruggedized camera provides two outputs (Out1 and Out2). The Industrial camera provides one output (OUT1).
The following subsections (3.7.1.1 and 3.7.1.2) list the output signals available for mapping.

3.7.1.1 Output Signals for both Industrial and Ruggedized Cameras

The following table lists the output signals common to both industrial and ruggedized camera versions.

Output Signals	Description
Active Exposure Window	A signal indicating the duration of the camera exposure.
Trigger Pulse Delayed	Maps the input trigger pulse to the output with delay set by the Exposure Delay Register.
Camera Ready	A signal indicating when the camera is ready to accept the next trigger pulse.
Pulse Generator	Maps the internal pulse generator waveform to the output.
Strobe #1	Maps the Strobe 1 signal to the corresponding external output.
Toggle	Controls the active polarity of the output signal.

Table 19: Internal output signals for industrial and ruggedized cameras.

3.7.1.2 Output Signals for Ruggedized Cameras only

The following table lists the additional output signals available only for ruggedized camera versions.

Output Signals	Description
Exposure Start	A short pulse (2µs) indicating the beginning of the camera exposure.
Exposure End	A short pulse (2µs) indicating the end of the camera exposure.
Mid Exposure	A short pulse (2µs) indicating the middle of the camera exposure.
H-Sync	A short pulse (2µs) synchronized with the camera line timing.
V-Sync	A short pulse (2µs) synchronized with the camera frame timing.
Odd/Even Frame Flag	A signal based on the camera's internal timing for indicating either odd or even frame. It alternates with every frame. If the output is set as High, this is the even frame; odd is low.
Trigger Pulse	Maps the input trigger pulse to the output with no delay (as is).
Strobe #2	Maps the Strobe 2 signal to the corresponding external output.
Frame Pulse	Maps the Vertical Frame Transfer pulse.

Table 20: Additional internal output signals available only for ruggedized cameras.

3.7.2 Strobe Settings

You can use the strobe outputs to synchronize the camera to external lighting or for triggering other devices.

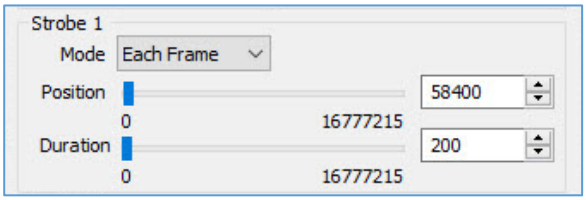

Figure 59: Strobe settings.

When setting up a strobe, you must assign it to a frame. Use the Mode drop-down menu to assign the strobe pulse to Each Frame, Odd Frames, or Even Frames. You can also select to disable the strobe pulse.

3.7.2.1 Strobe Position and Duration

You can set the position and duration of the Strobe within the entire frame timing period with a precision of 1.0 microseconds.

- The position determines when the strobe turns on during the frame period.
- The duration determines how long the strobe stays on.

3.7.3 Internal Pulse Generator

The camera has an internal pulse generator you can use as a trigger signal or map to one of the outputs. You can program the camera to generate a discrete sequence of pulses or a continuous trail.

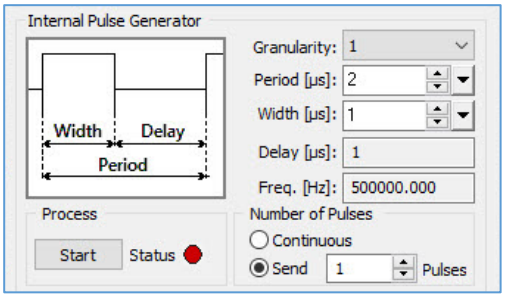

Figure 60: Internal Pulse Generator settings.

Use the following options to control the pulse generator:

Granularity. Indicates the number of clock cycles for each increment of the width and the period. The main resolution is in microseconds, and four granularity steps are possible: x1, x10, x100 and x 1000 (x1000 is equal to 1ms timing resolution).
Period. The amount of time in microseconds (determined by the granularity setting) between consecutive pulses.

Width. The amount of time in microseconds (determined by the granularity setting) the pulse remains at a high level before falling to a low level.
Delay. Shows the delay calculated in microseconds as Period minus Width.
Frequency. Shows the frequency calculated as 1/Period.
Number of Pulses. Enables sending pulses either continuously or by a set number of pulses. Two modes are available:

- Continuous – provides a continuous operation. Click **Stop** button to end.
- Sent – Set a discrete number of pulses (1 to 65535) to generate. Click **Stop** to end or allow the process to end after sending the last pulse.

Process Start. Starts and stops the pulse generator.

3.8 Acquisition Control

The Acquisition Control screen lets you configure trigger inputs, strobe duration and delay, and exposure settings.

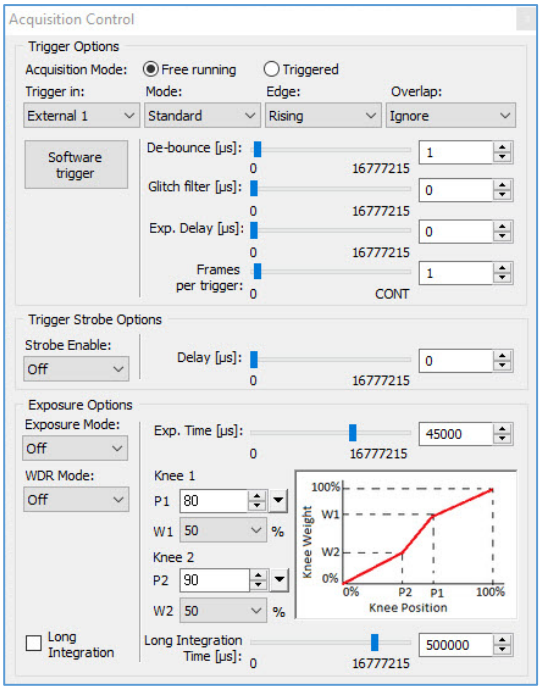

Figure 61: Acquisition Control screen.

3.8.1 Trigger Options

Tiger cameras can operate in free running mode or trigger mode. In free running mode, the camera runs without synchronization. In trigger mode, the camera waits for the trigger to start the image capture synchronizing to an external event.

To use triggers, select **Triggered** and use the following options to configure the trigger source and other settings:

Trigger in – Select one of the following active triggering input signals from the drop-down list:

- External 1. The camera expects a trigger signal coming from IN 1.
- Pulse Gen. The camera expects a trigger signal coming from the internal pulse generator.
- Computer. The camera expects a signal coming from CC 1.
- Software. Triggering starts when you press the software trigger button.
- External 2. The camera expects a trigger signal coming from IN 2.

Mode - Select a mode from the drop-down list:

- Standard. The camera waits for the trigger, then exposes and reads out the selected number of frames. The exposure occurs first followed by readout.
- Fast. The camera exposes a frame and then exposes the next frame while reading the previous frame. In this way, the camera overlaps the exposure and readout times. Fast trigger requires a predictable and stable trigger period.
- Double. The camera captures two images in rapid succession using a single trigger pulse. Upon receiving the trigger signal the camera starts integration for the first frame, completes the integration, transfers the information to the vertical registers and then captures the second image. While capturing the second image, the first one is being read out. The second image exposure time is equal to the time to read out one frame.

Edge – Select the active triggering edge:

- Rising – Uses the rising edge of the trigger pulse to start the exposure.
- Falling – Uses the falling edge of the trigger pulse to start the exposure.

Overlap – Select how to handle the next trigger pulse if it arrives while the previous triggering cycle is in process:

- Accept. Camera uses the next trigger. The camera will stop the present operation, then reset and start the new trigger cycle.
- Ignore. Camera ignores the next trigger and continues its present operation.

De-bounce – The camera ignores additional triggers received during the de-bounce time. Set the de-bounce time between 0 and 65535 microseconds.

Glitch Filter - Sets the minimum trigger pulse width. The camera ignores pulses with a width shorter than the selected value, which range from 0 to 65535 microseconds.

Exposure Delay - Sets the delay between the trigger pulse active edge and beginning of the exposure. You can set the delay from 0 to 16777215 microseconds.

Frames per trigger – When the Mode is Standard, this option lets you select the number of frames to read out per trigger. Select from 1 to 65530 or CONT (continuous) frames.

3.8.2 Trigger Strobe Options

The camera can send a strobe pulse for synchronization with an external light source. The Trigger Strobe Options section of the Acquisition Control screen lets you enable a strobe pulse with each trigger. From the Strobe Enable drop-down list, select from the following options:

Ruggedized Version	Industrial Version
Off	Off
Strobe 1	Strobe 1
Strobe 2 Both	

If enabling strobes, set the delay with respect to the trigger pulse active edge. You can set the delay from 0 to 16777215 microseconds.

3.8.3 Exposure Options

Exposure options let you select an exposure mode and set up exposure time, delay, and integration for triggered exposures.

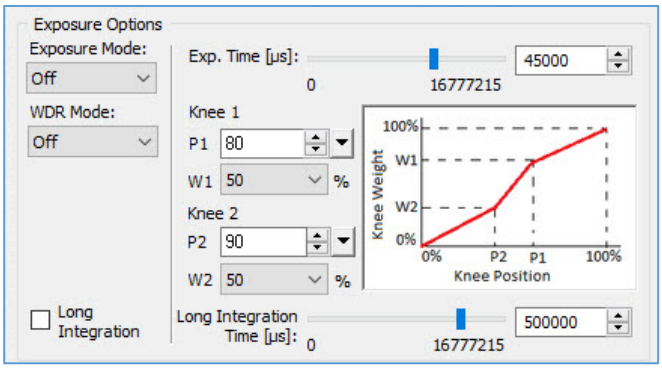

Figure 62: Acquisition exposure options.

Exposure Mode - Sets the camera exposure options to Off, Pulse Width, or Internal.

- Off - exposure time is equal to the frame period.
- Pulse Width - exposure time is equal to the trigger input pulse width.
- Internal – the internal camera timer control exposure based on the Exposure Time setting.

Exposure Time – Allows you to set the camera exposure time when the Internal exposure mode is selected. The exposure time ranges from 10 to 205662 microseconds when the Exposure Mode is set to Off.

NOTE

The Exposure Time range can vary by camera model.

WDR Mode – Allows you to adjust the linear wide dynamic range (WDR) at one point (Knee 1) or at two points (Knee 2) along the linear dynamic range. Knee 1 adjustment creates two intensity slopes. Knee 2 adjustments creates three intensity slopes. The range is 0- 100% where 0% is in the beginning of the scale. WDR is not supported by T8820 or T8810 cameras.
Enable Long Integration – Select the Long Integration check box to extend the camera's frame time beyond the free running frame period. You can also set the long integration time from 0 to 16777215 microseconds or more, depending on your camera model.

3.9 AEC/AGC Control

Automatic exposure control (AEC) and automatic gain control (AGC) are available only on ruggedized versions of the Tiger camera. The features enable the ruggedized Tiger camera to maintain the same image brightness under variable lighting conditions. The automatic exposure and gain control process drives the exposure and gain to achieve a target luminance level (in counts) as specified in Limit settings.

In addition to providing control functions, the AEC/AGC Control screen also provides real-time statistics on the camera's exposure time, gain, and luminance values. When the camera's exposure or gain limit is reached, an indicator light on the screen changes color from green to red.

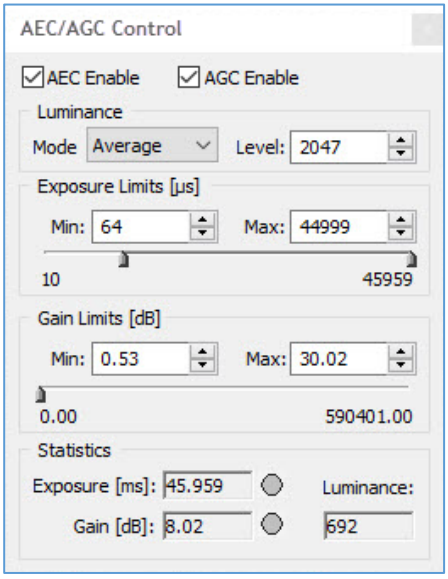

Figure 63: AEC/AGC Control screen.

To use AEC and AGC controls:

1. Select the check boxes for AEC Enable or AGC Enable.
2. Select the luminance level the camera is to maintain in the image. Options are Average and Peak:
   - Average – the camera calculates the average value of the image luminance within the image and compares that value to the value entered in the Limit field to determine changes to the exposure/gain settings.

- Peak – the camera calculates the peak luminance value (maximum luminance level) within the image and compares that value to the value entered in the Limit field to determine changes to exposure/gain settings.

3. Enter minimum and maximum Exposure Limits. For example, if motion capture is important, you can specify a short maximum exposure to avoid motion blur. Exposure Limits range from 10 microseconds to a maximum limit determined by operation mode. Generally, the minimum exposure limit should be set to a minimum of 30 microseconds to avoid control loop oscillations when the scene illumination changes suddenly.
4. Enter minimum and maximum Gain Limits. Gain Limits range from Min: 0 dB to Max: 30dB.

3.10 Image Parameters

The Image Parameters panel provides features for customizing, enhancing, or correcting images before output. Features like binning, AOI, image correction, and so on enable you to achieve different read-out speeds, reduce noise, adjust image tonal information, correct over- or under-performing pixels, and more.

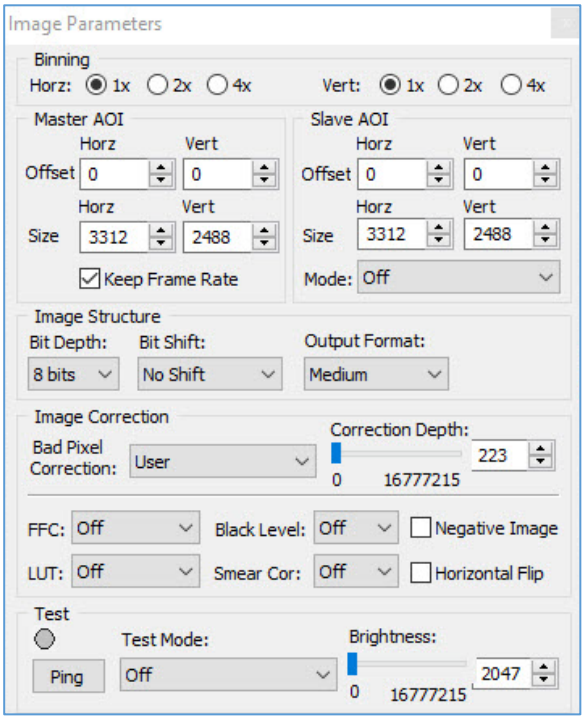

Figure 64: Image Parameters screen.

3.10.1 Binning

Binning combines charges from adjacent pixels to enable faster readout speeds and improved signal to noise ratios. Binning also reduces spatial resolution.

1. Horizontal binning combines adjacent pixels (2x or 4x) in a horizontal direction. It effectively creates larger pixels with less resolution but does not affect the frame rate.
   - Select the 2x radio button to combine two adjacent pixels.
   - Select the 4x radio button to combine four adjacent pixels.
   - No binning occurs when 1x is selected.
2. Vertical binning is a read-out mode where several image lines simultaneously clock into the horizontal CCD register before readout. This results in summing the charges of adjacent pixels (in the vertical direction) from two lines. Vertical binning reduces the vertical resolution by a factor of two or four and almost doubles/quadruples the frame rate.
   - Select the 2x radio button to combine two lines (the corresponding pixels from each line).
   - Select the 4x radio button to combine four lines (the corresponding pixels from each line).
   - No binning occurs when selecting 1x.

3.10.2 Area of Interest (AOI)

An Area of Interest (AOI) is a region within an image that you define by specifying horizontal and vertical size dimensions and offset coordinates. An AOI can reduce bandwidth and increase frame rates. The size dimensions specify the width and height of the AOI in pixels. The offset coordinates define the boundaries of the AOI.

3.10.2.1 Ruggedized Cameras – Master AOI/Slave AOI

Ruggedized Tiger cameras support one configurable Master AOI and one Slave AOI. When creating the Master AOI, you can preserve the camera's current frame rate or allow it to change based on the Master AOI size.

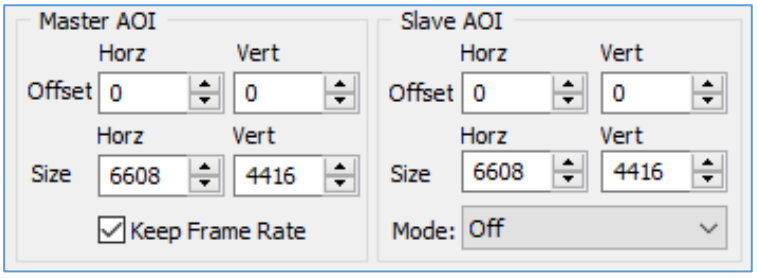

Figure 65: Master AOI and Slave AOI settings.

To create a Master AOI:

1. Select Image on the CamConfig menu.
2. In the Master AOI section, enter horizontal and vertical sizes.
3. Enter horizontal and vertical offset sizes.

4. Select Keep Frame Rate to continue the current frame rate.

The Slave AOI is nested inside the Master AOI. You might use the Slave AOI for a region of interest for automatic gain control (AGC)/automatic exposure control (AEC), auto white balance (AWB), or LUT. You define the Slave AOI by setting horizontal and vertical size dimensions and offset dimensions. When creating a Slave AOI, you must select one of the following modes:

Slave AOI Modes	Descriptions
Off	Turns off all modes.
Include	Displays the Master AOI image with the Slave AOI image included (the area outside of the Slave AOI appears black).
Exclude	Displays the Master AOI with the Slave AOI excluded (the Slave AIO appears black).
AGC/AEC ROI Include	Displays the Slave AOI image with Slave AOI AGC/AEC settings included.
AGC/AEC ROI Exclude	Displays the Slave AOI image with Slave AOI AGC/AEC settings excluded.
AWB ROI Include	Displays the Slave AOI image with Slave AOI AWB settings included.
AWB ROI Exclude	Displays the Slave AOI image with Slave AOI AWB settings excluded.
LUT ROI	Displays the Slave AOI image based on a lookup table.

Table 21: Slave AOI modes.

3.10.2.2 Industrial Camera AOI

The Industrial camera Image Parameters panel provides configurable Offset and Size dimensions for creating a single image AOI.

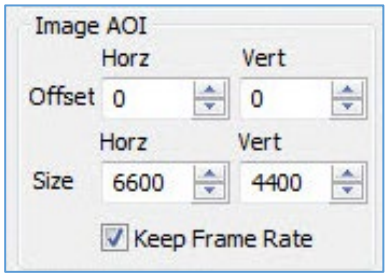

Figure 66: Industrial camera AOI.

Use the Offset horizontal and vertical coordinates to define the boundaries of the AOI. Use horizontal and vertical size dimensions to specify the width and height of the AOI in pixels.

3.10.3 Image Structure

The Tiger camera provides options for adjusting the image structure.

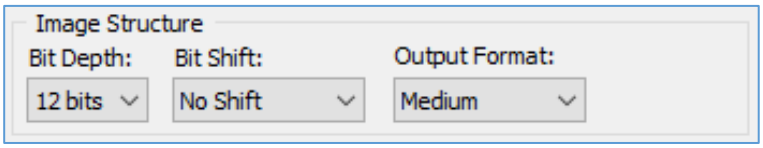

Figure 67: Image structure settings.

Use the following options to configure the camera's output:

Image Structure	Descriptions
Bit Depth	Determines the amount of tonal information available for images. Bit depth options are 8 bits, 10 bits, or 12 bits. **NOTE** For the T8820 camera, bit depth options are 8 or 10 bits.
Bit Shift	Changes the relative weighting of the output data by shifting bits to the left or to the right by a number of bit positions (positions are 1x, 2x, 3x, up to 7x).
Output Format	Sets the number of output taps used in the current configuration and mapped to the Camera Link output. **NOTE** For **small** Tiger cameras, use the Base or Medium option. For the **T8810** camera, use the Medium (8 taps) option. For the **T8820** camera, use the 16-tap Camera Link Full option.

Table 22: Bit depth, bit shift, output format descriptions.

3.10.4 Image Corrections

Tiger cameras provide image correction with preloaded defect maps and tables (static) and without preloaded defect maps or tables (dynamic).

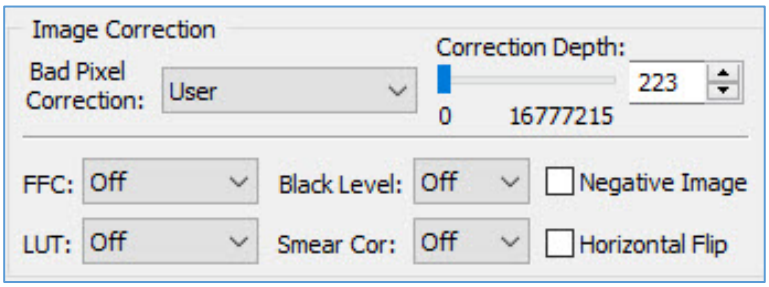

Figure 68: Image correction settings.

Use the following options to configure image corrections:

Image Corrections	Descriptions
Bad Pixel Correction	Enables static or dynamic pixel corrections. You can enable static and dynamic pixel correction independently or simultaneously. You can adjust the intensity threshold for the hot pixel or defective corrections using the Threshold slider (0 – 4095). • **Off:** disables Bad Pixel Correction. • **Factory:** corrects bad pixels identified with predetermined and preloaded defective and hot pixel maps created by the factory. • **Dynamic:** pixel correction works independently of defective or hot pixel maps. The camera determines which pixels need correction based on a threshold value you create and performs the correction automatically. • **Dynamic&Factory:** Combines dynamic pixel correction and use of factory bad pixel maps. • **User:** Corrects bad pixels identified by user-created correction maps. • **Dynamic&User:** Combines dynamic pixel correction and use of factory bad pixel maps.
Correction Depth	For Dynamic Pixel Correction, you can set a threshold level from 0 to 4095. The camera will correct all hot pixels having an amplitude (hot pixel intensity minus average pixel intensity) higher than the threshold setting.
FFC	Activates a flat field correction table created by the factory or user. The Flat Field Correction mechanism corrects for variation in illumination caused by the lens over the field of the array. You can turn FCC off or select from one of two FFC tables, FFC #1 and FFC #2.
LUT	Activates a Lookup Table for modifying and transforming the original video data into any arbitrary value. Tiger cameras support four lookup tables. LUT#1 is pre-programmed with gamma 0.65. LUTs #2, #3 and #4 can be loaded by the User.
Black Level	Activates automatic black level adjustment. Use the Black Level drop-down menu to enable automatic correction.
Smear (available on ruggedized camera only)	Enables vertical smear correction. This compensates for very bright, fast-moving objects that can produce a faint column artifact when using short exposures. Options are Off and On.
Negative Image	Reverses the image so that the lightest areas appear darkest and the darkest areas appear lightest. For color negatives, the colors are also reversed into their respective complementary colors.
Horizontal Flip (not available on the T8820 or T8810)	Flips the image horizontally.

Table 23: Image correction descriptions.

3.10.5 Test

Use the test functions on the Image Parameters panel to check camera communications and to generate test images from the Image Parameters panel.

The Ping function checks the serial connection status of the camera. Click Ping for a visual indication of the following status indicators:

- **GREEN** indicates a successful connection.
- **RED** indicates no connection.
- **YELLOW** indicates a ping command was sent to the camera.

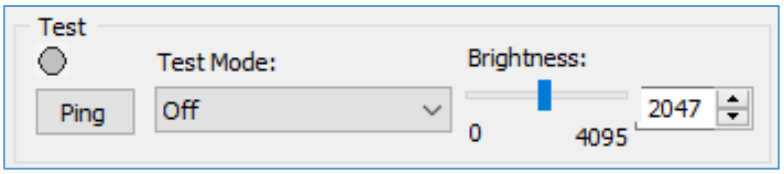

Figure 69: Image test settings.

Test Mode generates test images. The camera outputs various test images to verify the camera's general performance and connectivity to the frame grabber. This ensures that all of the major modules in the hardware are working properly and that the connection between the frame grabber and the camera is synchronized, that is, the image framing, output mode, communication rate, and so on are properly configured. Test image patterns do not exercise and verify the CCD's functionality.

Click the Test Mode drop-down menu drop-down for the following modes:

Test Mode	Descriptions
Off	Test mode is off.
BW Checkerboard	A black and white checkerboard pattern.
Gray Image	A uniformly dark gray image. User can set the value.
Tap Segmented	An image segmented by each tap output.
H Ramp	A stationary horizontal ramp image.
V Ramp	A stationary vertical ramp image.
H & V Ramp	A pair of horizontal and/or vertical lines positioned in the image at any pixel/line in the image. You can use the horizontal and vertical lines as a measuring tool; the pixel and line positions are referenced to the CCD pixels and lines, not to the image pixels and lines.
H & V Ramp Moving	A moving horizontal and vertical ramp image.
Vertical Bars	A set of 8 vertical gray bars with different gray levels.
Superimpose Crosshair	Superimposes a crosshair watermark (2 pixels and 2 lines thickness) indicating the absolute center of the image.

Table 24: Test modes.

3.11 White Balance Color Control

White balance lets you adjusts the camera's color setting to preserve the original colors and make white objects appear white. The screen displays the current (calculated) white balance coefficients for each color (red, green, blue). The Color screen is disabled for monochrome cameras.

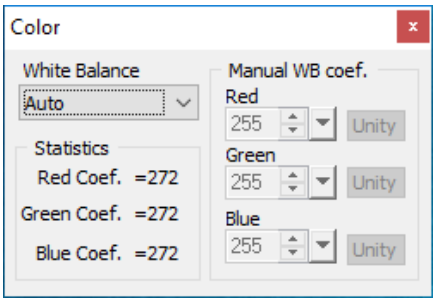

Figure 70: Color screen.

Use the White Balance drop-down menu to select a white balance preset:

White Balance Presets	Descriptions
Off	No white balance performed.
Once	The camera analyzes only one image frame, calculates only one set of color correction coefficients, and corrects all subsequent frames with this set of coefficients.
Auto	The camera analyzes the entire frame, derives a set of correction coefficients on each frame, and applies them to the next frame.
Manual	The camera uses the correction coefficients as entered from the user.

Table 25: White balance presets.

Use Manual WB Coefficients to manually define white balance coefficients for each color (red, green, and blue). Coefficient values affect the intensity of each color and range from 0 to 4095. The Statistic area of the screen gives you the current (calculated) white balance coefficients per color.

TIP

For best color accuracy and stability when the spectral source is constant, image a uniform grey target with the camera using a desired light source. Select **Once** to find the correct R, G, and B coefficients and write down the values. Then select **Manual** and load these coefficients into the camera. Leave Manual selected. The camera will now apply these coefficients to every frame captured.

3.12 Temperature Control

Use the temperature option to control the camera's temperature and sensor temperature.

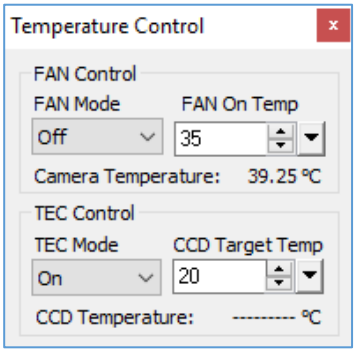

Figure 71: Temperature control.

Settings	Descriptions
FAN Mode	Sets the fan to Off, On, or Auto.
FAN On Temp	Sets the temperature that turns on the fan in auto mode. The temperature range is from 0° to 85° C.
TEC Mode	Cools the CCD sensor (future option) – not available on T8810 or T8820 cameras.
CCD Target Temp	Sets the temperature that turns on TEC cooler in auto mode. The temperature range is from 0° C to 85° C (future option).

3.13 Canon Lens Control

If using Canon EF lens control, you can control the lens iris and focus from the Lens Control screen. The screen also provides the current status of the lens control unit, encoder, iris, and iris range.

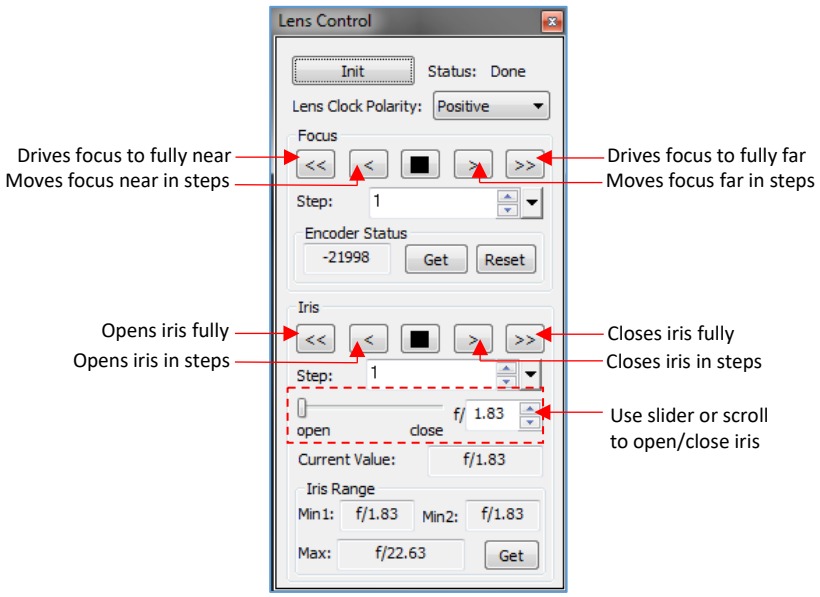

Figure 72: Lens control screen.

Settings	Descriptions
Init	Initializes the Canon EF lens. After initializing, you should click the **Get** button at the bottom of the screen to retrieve current iris range values.
Status	Indicates status of lens initialization, either Done or Failed.
Lens Clock Polarity	Used for data communications with the lens. Polarity options are Positive (default) and Negative. If Init fails, change polarity.
Focus	Controls for focusing the lens in real-time (refer to screen above).
Step	Allows you to change the focus sensitivity of the lens from fine (step 1) to coarse (step 255). Based on user experience, a step value of 4 is recommended for fine focus.
Encoder Status	Provides a relative measure of the lens focus position but does not provide sufficiently accurate location information to set lens focus after power cycling. Once the lens is focused, it will retain focus after repeated power cycling. • Click **Get** to display the current location of the lens position. • Click **Reset** to return status to zero value.
Iris	Controls for opening/closing iris (refer to screen above).
Iris Range	Shows register values of iris and current iris value. Click **Get** to ensure current iris range values.

4 CXP Camera Configuration

4.1 GenICam Camera Configuration

The Imperx Tiger CoaXPress (CXP) camera supports the GenICam™ standard for generic programming. The GenICam standard defines the syntax and semantics of the camera description file and defines a mechanism for you to configure the camera by reading/writing the camera registers associated with the features.

NOTE

Your frame grabber should provide a GenICam compliant player for configuring the Tiger CXP camera.

4.2 XML Parameters

The Tiger camera includes an embedded Extensible Markup Language (XML) camera description file containing all of the information required to automatically map camera features to its internal registers.

The XML file contains a set of nodes with each node representing a feature and parameters of the camera.

- Each node has a set of attributes that define the feature: parameter name, type (integer, Boolean, etc.), value, visibility, description, and access (RW: Read/Write, RO: Read Only, WO: Write Only).
- The camera transfers the XML file to the host application when a connection is first established.
- The host application parses the XML file and presents a node tree representation in a GenICam compliant player.

Tiger XML nodes are listed below and include an example screen capture for a GenICam compliant player.

NOTE

Parameter names underlined in ***Bold italic and red color*** are changeable only if image acquisition is turned **off**. These parameters cannot be changed if image acquisition is on.

4.2.1 Device Control

Device Control gives you information about the camera and the GenICam compliant XML file that provides control over the CXP camera. Most of the Device Control information is read-only except for the Device Reset and Camera Head Reset functions.

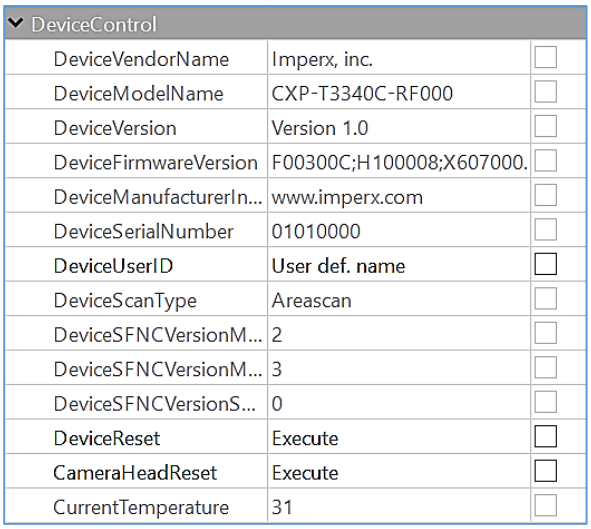

Figure 73: Device Control screen example.

Parameter Name	Type	Value	Access	Description
DeviceScanType	Enumeration	**String** “Areascan” **Num.** 0	RO	Specifies the sensor scan type.
DeviceSFNCVersionMajor	Integer		RO	Major version of SFNC used to create GenICam XML.
DeviceSFNCVersionMinor	Integer		RO	Minor version of SFNC used to create GenICam XML.
DeviceSFNCVersionSubMinor	Integer		RO	Subminor version of SFNC used to create GenICam XML.
DeviceReset	Command		WO	Resets CXP and the camera to power-up state.
CameraHeadReset	Command		WO	Resets camera circuitry. CXP does not reset. Note: After camera reset, issue a UserSetLoad command.

Parameter Name	Type	Value	Access	Description
CurrentTemperature	Integer		RO	Returns current camera temperature*.

*Current Temperature returns a two's complement number. The range is +127C to -128C. A value greater than 127 indicates negative temperature. To calculate negative temperature, subtract 255 from the value. For example, a value of 254 indicates a temperature of 254-255 = -1 degree C.

4.2.2 Version Info

Version Info parameters provide read-only information identifying the camera's firmware, hardware, software, image sensor, camera version, CXP support, and so on.

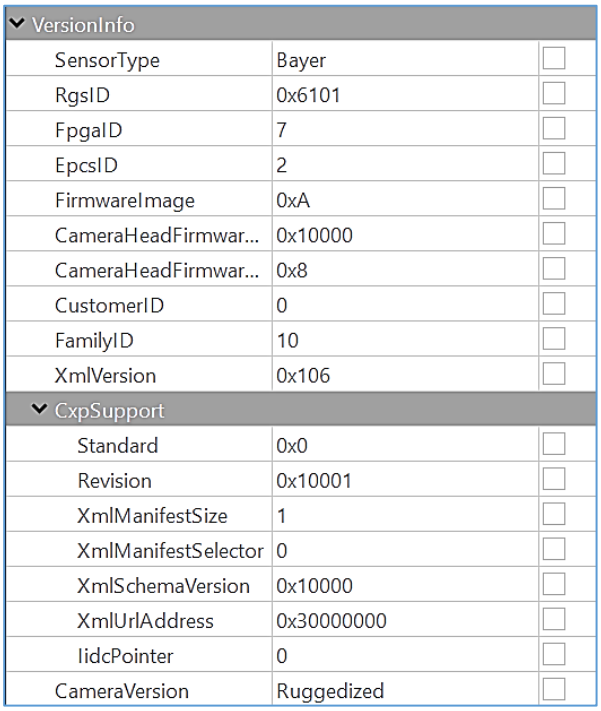

Figure 74: Version Info screen example.

Parameter Name	Type	Value	Access	Description
SensorType	Enumeration	**String** / **Num.** "Monochrome" 0 "Bayer" 1	RO	Returns CCD sensor type.
RgsID	Integer		RO	Returns the RGS ID register.
FpgaID	Integer		RO	Returns the FPGA ID.

Parameter Name	Type	Value	Access	Description
EpcsID	Integer		RO	Returns the EPCS ID (0=EPCS16, 1=EPCS64, 2=EPCS128).
FirmwareImage	Integer		RO	Returns the firmware Image ID (F=Factory or A=Application).
CameraHeadFirmwareVersion	Integer		RO	Returns the camera firmware version number.
CameraHeadFirmwareBuild	Integer		RO	Returns camera firmware build number.
CustomerID	Integer		RO	Returns Customer ID for custom firmware (0=Imperx standard firmware).
FamilyID	Integer		RO	Returns the Family ID.
XmlVersion	Integer		RO	Returns version number of XML file.
CameraVersion	Enumeration	**String** **Num.** "Industrial" 0 "Ruggedized" 1 "Reserved" 2	RO	Returns camera version type; Industrial, Ruggedized, or Reserved.

Version Info_CXP Support

Parameter Name	Type	Value	Access	Description
Standard	Integer		RO	Returns CoaXPress "magic" number.
Revision	Integer		RO	Returns version of implemented CoaXPress specification.
XMLManifestSize	Integer		RO	Returns the number of XML manifests available in the camera.
XMLManifestSelector	Integer		RO	Returns the number of the selected XML manifest.
XmlSchemaVersion	Integer		RO	Returns the GenICam schema version for the XML.

Parameter Name	Type	Value	Access	Description
XmlUrlAddress	Integer		RO	Returns the address of the start of the URL string that points to the XML file.
IidcPointer	Integer		RO	Returns the address of the start of the IIDC register space.

4.2.3 Image Format Control

Image Format Control lets you change screen resolution, create an Area of Interest (SAOI), apply binning to image output, select camera bit depth, and more.

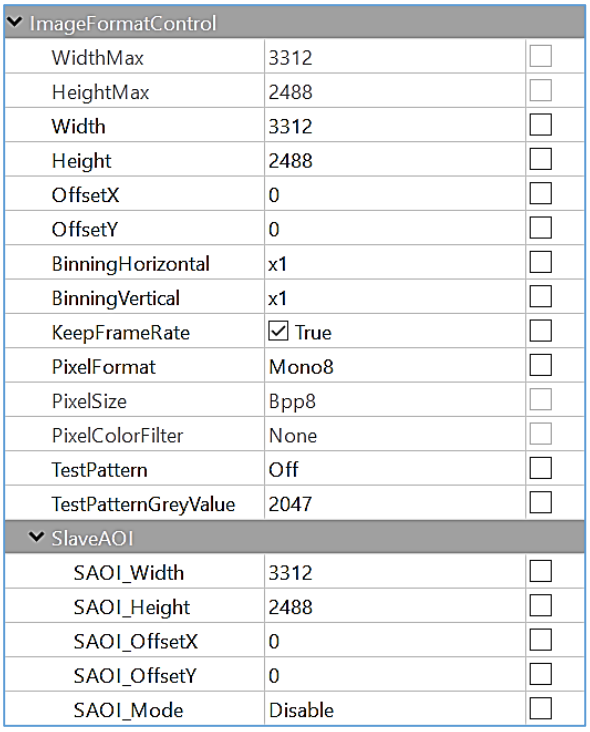

Figure 75: Image Format Control screen example.

Parameter Name	Type	Value	Access	Description
WidthMax	Integer		RO	Max. width of image (in pixels) for OffsetX=0 calculated after horizontal binning, decimation, or any other function changing the image horizontal dimension.

Parameter Name	Type	Value	Access	Description
HeightMax	Integer		RO	Max. height of image (in pixels) OffsetY=0 calculated after vertical binning, decimation, or any other function changing the image vertical dimension.
Width	Integer	Min: 24 Max: Depends on camera model	RW	The actual image width of the Master AOI output by the camera (in pixels).
Height	Integer	Min: 2 Max: Depends on camera model	RW	The actual image height of the Master AOI output by the camera (in pixels).
OffsetX	Integer	Min: 0 Max: OffsetX_MaxExpr	RW	Horizontal offset from the origin to the Area of Interest (in pixels).
OffsetY	Integer	Min: 0 Max: OffsetY_MaxExpr	RW	Vertical offset from the origin to the Area of Interest (in pixels).
BinningHorizontal	Enumeration	**String** **Num.** "x1" 0 "x2" 1 "x4" 3	RW	Number of horizontal photo-sensitive cells to combine. This reduces the horizontal resolution (width) of the image.
BinningVertical	Enumeration	**String** **Num.** "x1" 0 "x2" 1 "x4" 3	RW	Number of vertical photo-sensitive cells to combine. This reduces the vertical resolution (height) of the image.
KeepFrameRate	Boolean		RW	Enables camera frame rate to stay the same and be independent of the AOI vertical window size.
PixelFormat	Enumeration	**String** **Num.** "Mono8" 0x 01080001 "Mono10" 0x01100003 "Mono12" 0x01100005 "BayerGR8" 0x01080008 "BayerGR10" 0x0110000C "BayerGR12" 0x01100010	RW	Indicates the format of the pixel to use during the acquisition.
PixelSize	Enumeration	**String** **Num.** "Bpp8" 0 "Bpp10" 1	RO	Returns total size in bits of a pixel in the image.

Parameter Name	Type	Value	Access	Description
		"Bpp12" 2		
PixelColorFilter	Enumeration	**String** **Num.** "None" 0 "BayerRG" 1 "BayerGB" 2 "BayerGR" 3 "BayerBG" 4	RO	Returns type of color filter applied to the image.
TestPattern	Enumeration	**String** **Num.** "Off" 0 "BwCheckerBoard" 1 "Grey" 2 "TapSegmented" 3 "GreyHorizontalRamp" 4 "GreyVerticalRamp" 5 "HorizontalAndVertical Ramp" 6 "HorizontalAndVertical RampMoving" 7 "VerticalBars" 8 "Crosshair" 9 Reserved 10 - 15 "IpxCxpPattern" 16	RW	Selects the type of test pattern generated by the camera as image source.
TestPatternGreyValue	Integer	Min: 0 Max: 4095	RW	Grey saturation value for Grey test pattern.

Image Format_Slave AOI

Parameter Name	Type	Value	Access	Description
SAOI_Width	Integer	Min: WidthIncExpr Max: Depends on camera model	RW	The actual image width of the Slave AOI output by the camera (in pixels).
SAOI_Height	Integer	Min: 2 Max: Depends on camera model	RW	The actual image height of the Slave AOI output by the camera (in pixels).
SAOI_OffsetX	Integer	Min: 0 Max: SAOI_OffsetX_MaxExpr	RW	Horizontal offset from the origin to the Slave AOI (in pixels).
SAOI_OffsetY	Integer	Min: 0 Max: SAOI_OffsetY_MaxExpr	RW	Vertical offset from the origin to the Slave AOI (in pixels).
SAOI_Mode	Enumeration	**String** **Num.** "Disable" 0	RW	Represents the Slave AOI mode. The Slave AOI might be used for

Parameter Name	Type	Value		Access	Description
		“Include”	1		the Region of Interest for AGC/AEC, AWB, and LUT.
		“Exclude”	2		
		“AEC_AGC_Include”	3		
		“AEC_AGC_Exclude”	4		
		“AWB_Include”	5		
		“AWB_Exclude”	6		
		“LUT_Include”	7		
		“LUT_Exclude”	8		

4.2.4 Acquisition Control

Use the Acquisition controls for setting the parameters around image capture, exposure, frame rates, triggers, and so on.

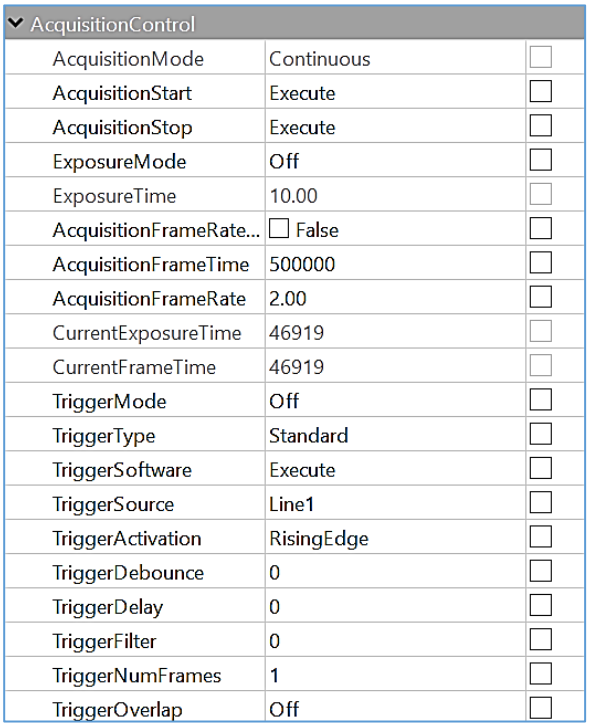

Figure 76: Acquisition Control screen example.

Parameter Name	Type	Value	Access	Description
AcquisitionMode	Enumeration	**String** / **Num.** "Continuous" 0	RO	Sets camera acquisition mode (mainly the number of frames to capture and how acquisition stops).
AcquisitionStart	Command		WO	Starts acquisition of images.
AcquisitionStop	Command		WO	Stops acquisition of images at end of current frame.
ExposureMode	Enumeration	**String** / **Num.** "Off" 0 "TriggerWidth" 1 "Timed" 2	RW	Sets the operation mode of the Exposure.
ExposureTime	Float	Min: ExposureMinExpr Max: ExposureMaxExpr	RO	Sets exposure time in microseconds when

Parameter Name	Type	Value	Access	Description
				ExposureMode is Timed and ExposureAuto is Off.
AcquisitionFrameRateEnable	Boolean		RW	Controls whether AcquisitionFrameRate and AcquisitionFramePeriod features are writable and used to control the acquisition rate. If these features are enabled, you can extend the actual frame time beyond the free-running frame time.
AcquisitionFrameTime	Integer	Min: MinFrameTimeReg Max: 0xFFFFFF	RW	Sets the actual frame time in microseconds.
AcquisitionFrameRate	Float	Min: 0.059604648 Max: FrameRateMaxExpr	RO	Returns the frame acquisition rate (in Hertz).
CurrentExposureTime	Integer		RO	Returns the current exposure time in units of microseconds.
CurrentFrameTime	Integer		RO	Returns the current frame time in units of microseconds.
TriggerMode	Enumeration	**String** **Num.** "Off" 0 "On" 1	RW	Enables the Trigger Mode of operation.
TriggerType	Enumeration	**String** **Num.** "Standard" 0 "Fast" 1 "Double" 2	RW	Selects the Trigger mode of operation.
TriggerSoftware	Command		WO	Generates an internal trigger. You must set TriggerSource to Software.
TriggerSource	Enumeration	**String** **Num.** "Off" 0 "CXPTrigger" 3 "Line1" 1 "Line2" 5 "PulseGenerator" 2 "Software" 4	RW	Specifies the internal signal or physical input Line to use as the trigger source. The selected trigger must have TriggerMode set to On.

Parameter Name	Type	Value	Access	Description
TriggerActivation	Enumeration	**String** / **Num.** "RisingEdge" 0 "FallingEdge" 1	RW	Specifies the activation mode of the trigger.
TriggerDebounce	Integer	Min: 0 Max: 65535	RW	Specifies the debounce period of the trigger signal in microseconds.
TriggerDelay	Integer	Min: 0 Max: 65535	RW	Specifies the delay time in microseconds between the trigger pulse and start of exposure.
TriggerFilter	Integer	Min: 0 Max: 65535	RW	Specifies the filter period of the trigger signal in microseconds.
TriggerNumFrames	Integer	Min: 1 Max: 65535	RW	Selects the number of frames delivered after every trigger signal. A value of 65532 sets it to Continuous.
TriggerOverlap	Enumeration	**String** / **Num.** "Off" 0 "ReadOut" 1 "PreviousFrame" 2	RW	Specifies the trigger overlap mode if the camera receives a trigger pulse while the camera is still processing the previous trigger.

4.2.5 Gain and Offset

Gain and Offset XML parameters provide control over analog gain, digital gain, black level, and offset by each tap.

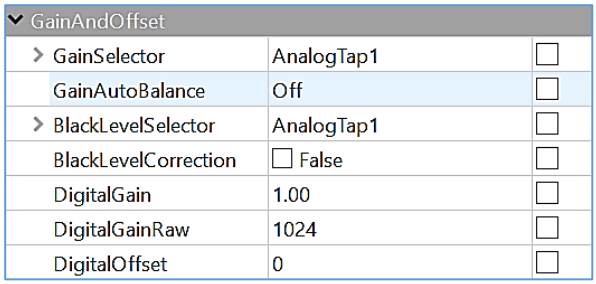

Figure 77: Gain and Offset screen example.

Parameter Name	Type	Value	Access	Description
GainSelector	Enumeration	**String** **Num.** "AnalogTap1" 0 "AnalogTap2" 0x10 "AnalogTap3" 0x20 "AnalogTap4" 0x30	RW	Selects the Gain to be controlled by the various Gain features.
Gain	Float	Min: 0.0 Max: GainMaxExpr	RW	Controls selected gain as an absolute physical value (1.0x to 63.1x) (amplification factor to the video signal).
GainRaw	Integer	Min: 0 Max: GainRawMaxExpr	RW	Controls selected gain as an absolute physical value represented in RAW counts from 0 (0dB) to 1023 (30dB) with 0.03519dB per step.
GainAutoBalance	Enumeration	**String** **Num.** "Off" 0 "Continuous" 1 "Once" 2	RW	Sets the mode for gain (tap) balancing between the sensor taps. The gain coefficients of each channel or tap are adjusted to match.
BlackLevelSelector	Enumeration	**String** **Num.** "AnalogTap1" 0 "AnalogTap2" 0x10 "AnalogTap3" 0x20 "AnalogTap4" 0x30	RW	Selects the tap to be adjusted for offset or black level.
BlackLevelRaw	Integer	Min: 0 Max: 4095	RW	Sets analog black level (offset) as a raw integer value (when AGC is disabled) for each analog tap.
BlackLevelCorrection	Boolean	False or True	RW	Enables automatic black level correction.
DigitalGain	Float	Min: 0.0 Max: 4.0	R0	Returns the Digital Gain for all taps.
DigitalGainRaw	Integer	Min: 0 Max: 4095	RW	Sets the raw value of Digital Gain from 0 (1.0x) to 4095 (4.0x).
DigitalOffset	Integer	Min: -512 Max: 511	RW	Sets the Digital Offset for all taps.

4.2.6 Auto Gain and Auto Exposure

Auto Gain and Auto Exposure parameters enable the camera to maintain image brightness under variable lighting conditions.

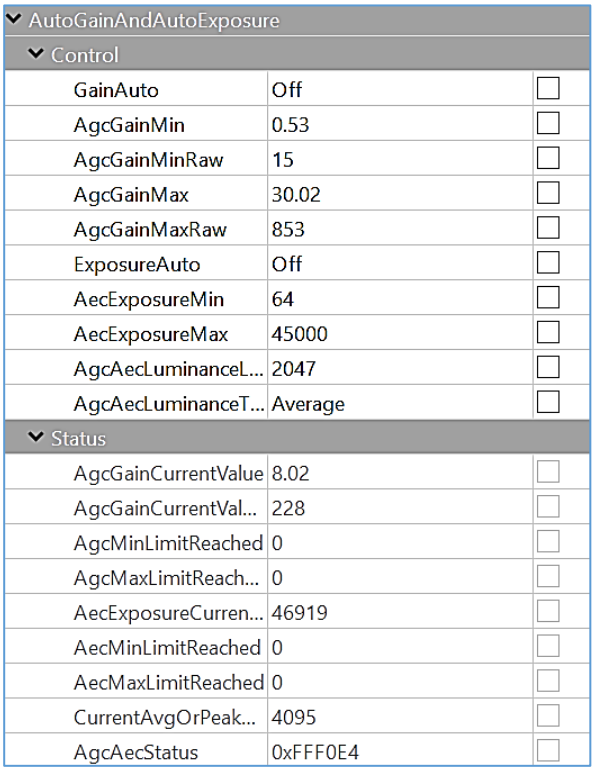

Figure 78: Auto Gain and Auto Exposure screen example.

Auto Gain and Auto Exposure_Control

Parameter Name	Type	Value	Access	Description
GainAuto	Enumeration	**String** / **Num.** "Off" 0 "Continuous" 1	RW	Sets automatic gain control (AGC) mode. The exact algorithm used to implement AGC is device-specific.
AgcGainMin	Float	Min: 0.4223 Max: AgcGainMaxRegConv	RO	Returns the minimum Analog Gain value for the AGC mode as an amplification factor (1x to 63x).
AgcGainMinRaw	Integer	Min: 15 Max: AgcGainMaxReg	RW	Sets the minimum Analog Gain value for the AGC mode in RAW units (0.03519 dB per step) (0dB to 30dB).
AgcGainMax	Float	Min: AgcGainMinRegConv Max: GainMaxExpr	RO	Returns the maximum Analog Gain value for the AGC mode as

Parameter Name	Type	Value	Access	Description
				an amplification factor (1x to 63x).
AgcGainMaxRaw	Integer	Min: AgcGainMinReg Max: GainRawMaxExpr	RW	Sets the maximum Analog Gain value for the AGC mode in RAW units (0.03519 dB per step) (0dB to 30dB).
ExposureAuto	Enumeration	**String** **Num.** "Off" 0 "Continuous" 1	RW	Enables the automatic exposure control (AEC) mode.
AecExposureMin	Integer	Min: IntExposureMinExpr Max: AecExposureMaxReg	RW	Sets the minimum exposure time value for the AEC in microseconds.
AecExposureMax	Integer	Min: AecExposureMinReg Max: IntExposureMaxExpr	RW	Sets the maximum exposure time value for the AEC in microseconds.
AgcAecLuminanceLevel	Integer	Min: 1 Max: 4095	RW	Sets the desired luminance level to be maintained during AGC or AEC in digital numbers.
AgcAecLuminanceType	Enumeration	**String** **Num.** "Average" 0 "Peak" 1	RW	Sets the luminance mode to be used during AGC or AEC.

Auto Gain and Auto Exposure_Status

Parameter Name	Type	Value	Access	Description
AgcGainCurrentValue	Float	Min: 0.0 Max: GainMaxExpr	RO	Returns current value of Analog Gain, calculated by camera in AGC mode.
AgcGainCurrentValueRaw	Integer		RO	Returns the maximum Analog Gain value for the AGC mode in RAW units.
AgcMinLimitReached	Integer		RO	Returns whether or not the minimum digital gain limit was reached during AGC operation.
AgcMaxLimitReached	Integer		RO	Returns whether or not the maximum digital gain limit was reached during AGC operation.
AecExposureCurrentValue	Integer		RO	Returns the current value of Exposure in microseconds as calculated by the camera in AEC mode.

Parameter Name	Type	Value	Access	Description
AecMinLimitReached	Integer		RO	Returns whether the minimum exposure limit was reached during AEC operation.
AecMaxLimitReached	Integer		RO	Returns whether the maximum exposure limit was reached during AEC operation.
CurrentAvgOrPeakLuminance	Integer		RO	Returns the current average or peak luminance in output counts depending on the AgcAecLuminanceType mode.
AgcAecStatus	Integer		RO	Returns the value of AgcAecStatus register>

4.2.7 Data Correction

Data Correction XML parameters enable you to implement tables and other techniques for improving image sensor performance.

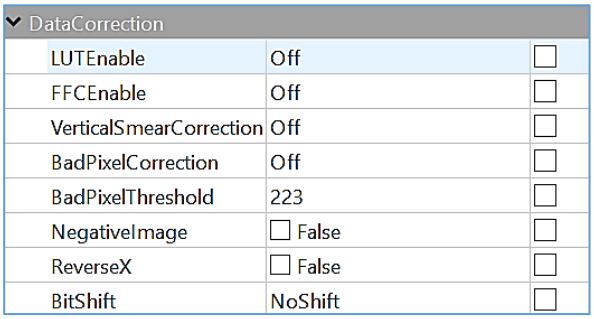

Figure 79: Data Correction screen example.

Parameter Name	Type	Value		Access	Description
LUTEnable	Enumeration	**String** "Off" "LUT1" "LUT2" "LUT3" "LUT4"	**Num.** 0 1 2 3 4	RW	Selects the LUT to be to be applied to the image.
FFCEnable	Enumeration	**String** "Off" "FFC1" "FFC2"	**Num.** 0 1 2	RW	Selects the Flat Field Correction table to be applied to the image.

Parameter Name	Type	Value	Access	Description
VerticalSmearCorrection	Enumeration	**String** / **Num.** "Off" 0 "Dinamic" 1 "Static" 2	RW	Enables Vertical Smear Correction.
BadPixelCorrection	Enumeration	**String** / **Num.** "Off" 0 "Static1" 1 "Dynamic" 2 "Static1_and_Dynamic" 3 "Static2" 4 "Static2_and_Dynamic" 5	RW	Enables Bad Pixel Correction options.
BadPixelThreshold	Integer	Min: 0 Max: 4095	RW	Sets the threshold for the Dynamic Bad Pixel Correction algorithm.
NegativeImage	Boolean		RW	Inverts the image brightness data so bright areas are dark and dark areas are bright.
ReverseX	Boolean		RW	Flips the image horizontally. Applies the region of interest after flipping.
BitShift	Enumeration	**String** / **Num.** "NoShift" 0 "OneBitLeft" 1 "TwoBitsLeft" 2 "ThreeBitsLeft" 3 "FourBitsLeft" 4 "FiveBitsLeft" 5 "SixBitsLeft" 6 "SevenBitsLeft" 7 "OneBitRight" 9 "TwoBitsRight" 10 "ThreeBitsRight" 11 "FourBitsRight" 12 "FiveBitsRight" 13 "SixBitsRight" 14 "SevenBitsRight" 15	RW	Selects the number of image data bits to shift in the data output and direction of bit shift.

4.2.8 White Balance

White Balance XML parameters give you control over the individual red, green, and blue colors produced by the sensor in color cameras.

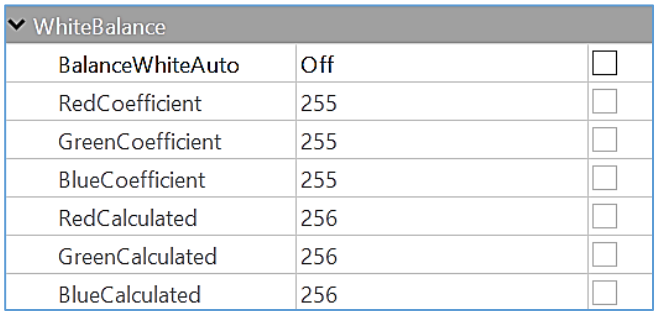

Figure 80: White Balance screen example.

Parameter Name	Type	Value	Access	Description
BalanceWhiteAuto	Enumeration	**String** / **Num.** "Off" 0 "Once" 1 "Continuous" 2 "Manual" 3	RW	Controls the mode for automatic white balancing between the color channels.
RedCoefficient	Integer	Min: 0 Max: 4095	RW	Sets the white balance coefficient for the Red channel (when WhiteBalanceMode is Manual).
GreenCoefficient	Integer	Min: 0 Max: 4095	RW	Sets the white balance coefficient for the Green channel (when WhiteBalanceMode is set to Manual).
BlueCoefficient	Integer	Min: 0 Max: 4095	RW	Sets the white balance coefficient for the Blue channel (when WhiteBalanceMode is Manual).
RedCalculated	Integer		RO	Displays the white balance coefficient for the Red channel calculated by the camera (when WhiteBalanceMode is Once or Continuous).
GreenCalculated	Integer		RO	Displays the white balance coefficient for the Green channel calculated by the camera (when WhiteBalanceMode is Once or Continuous).
BlueCalculated	Integer		RO	Displays the white balance coefficient for the Blue channel calculated by the camera (when WhiteBalanceMode is Once or Continuous).

4.2.9 Strobe

Use strobe XML parameters to activate and control strobe outputs.

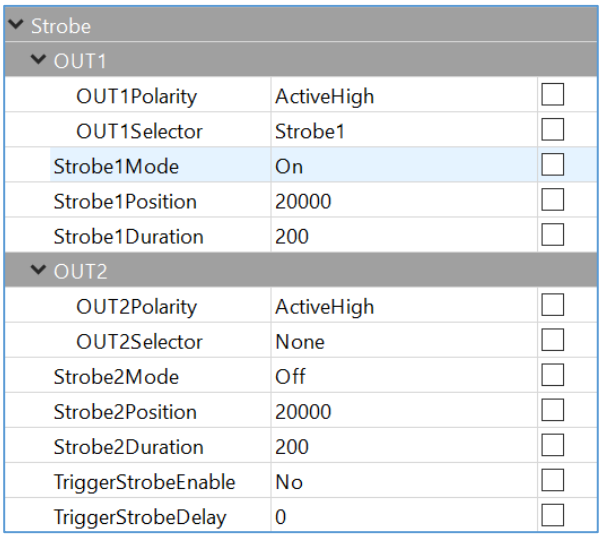

Figure 81: Strobe screen example.

Parameter Name	Type	Value	Access	Description
Strobe1Mode	Enumeration	**String** / **Num.** "Off" 0 "On" 1 "OddFrames" 2 "EvenFrames" 3	RW	Sets the Strobe1 mode of operation.
Strobe1Position	Integer	Min: 0 Max: CurrentFrameTimeReg	RW	Sets the position of the Strobe1 pulse with respect to the start of the frame.
Strobe1Duration	Integer	Min: 1 Max: CurrentFrameTimeReg	RW	Sets the duration of the strobe pulse in microseconds.
Strobe2Mode	Enumeration	**String** / **Num.** "Off" 0 "On" 1 "OddFrames" 2 "EvenFrames" 3	RW	Sets the Strobe2 mode of operation.
Strobe2Position	Integer	Min: 0 Max: CurrentFrameTimeReg	RW	Sets the position of the Strobe2 pulse with respect to the start of the frame.
Strobe2Duration	Integer	Min: 1 Max: CurrentFrameTimeReg	RW	Sets the duration of the strobe pulse in units of microseconds.

Parameter Name	Type	Value	Access	Description
TriggerStrobeEnable	Enumeration	**String** / **Num.** "No" 0 "EnableStrobe1" 1 "EnableStrobe2" 2 "EnableStrobe1and2" 3	RW	Enables a strobe signal synchronous with the trigger pulse. The strobe signal is mapped to one or both of the available strobe outputs.
TriggerStrobeDelay	Integer	Min: 1 Max: 0xFFFFFF	RW	Sets the delay between the trigger pulse and the strobe pulse in microseconds.

Strobe_OUT1

Parameter Name	Type	Value	Access	Description
OUT1Polarity	Enumeration	**String** / **Num.** "ActiveLow" 0 "ActiveHigh" 1	RW	Sets the active logic level of the OUT1 output.
OUT1Selector	Enumeration	**String** / **Num.** "None" 0 "ExposureStart" 1 "ExposureEnd" 2 "MidExposure" 3 "ExposureActive" 4 "HSync" 5 "VSync" 6 "OddEvenFrame" 7 "TriggerActual" 8 "TriggerDelayed" 9 "CameraReady" 10 "PulseGenerator" 11 "Strobe1" 12 "Strobe2" 13 "ToggleOut1" 14 "FrameTransferPulse" 15	RW	Enables mapping various internal signals to the OUT1 output.

Strobe_OUT2

Parameter Name	Type	Value	Access	Description
OUT2Polarity	Enumeration	**String** / **Num.** "ActiveLow" 0 "ActiveHigh" 1	RW	Sets the active logic level of the OUT2 output.

Parameter Name	Type	Value		Access	Description
ToggleOut2	Enumeration	**String**	**Num.**	RW	Enables mapping various internal signals to the OUT2 output.
		"None"	0		
		"ExposureStart"	1		
		"ExposureEnd"	2		
		"MidExposure"	3		
		"ExposureActive"	4		
		"HSync"	5		
		"VSync"	6		
		"OddEvenFrame"	7		
		"TriggerActual"	8		
		"TriggerDelayed"	9		
		"CameraReady"	10		
		"PulseGenerator"	11		
		"Strobe1"	12		
		"Strobe2"	13		
		"ToggleOut2"	14		
		"FrameTransferPulse"	15		

4.2.10 Pulse Generator

The camera provides an internal pulse generator for generating a trigger signal. You can program it to generate a discrete sequence or a continuous stream of pulse signals.

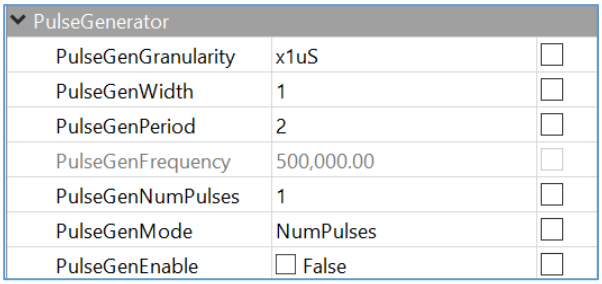

Figure 82: Pulse Generator screen example.

Parameter Name	Type	Value		Access	Description
PulseGenGranularity	Enumeration	**String**	**Num.**	RW	Sets multiplication factor of Pulse Generator where x1=1 microsecond, x10=10 microsecond, etc.
		"x1uS"	0		
		"x10uS"	1		
		"x100uS"	2		
		"x1000uS"	3		
PulseGenWidth	Integer	Min: PulseGenMin Max: PulseGenWidthMax		RW	Sets the pulse width of the Pulse Generator in microseconds.

Parameter Name	Type	Value	Access	Description
PulseGenPeriod	Integer	Min: PulseGenMin Max: PulseGenPeriodMax	RW	Sets the pulse period of the Pulse Generator in microseconds.
PulseGenFrequency	Float		RO	Returns frequency of pulse generator in Hz.
PulseGenNumPulses	Integer	Min: 1 Max: 65535	RW	Sets number of pulses Pulse Generator is to generate.
PulseGenMode	Enumeration	**String** **Num.** "NumPulses" 0 "Continuous" 1	RW	Sets the Pulse Generator mode.
PulseGenEnable	Boolean		RW	Enables Pulse Generator. You can map pulse generator output to the OUT1 or OUT2 output signals.

4.2.11 Canon Lens Control

The XML parameters provide the ability set up controls for Canon EF lens iris and focus functions. The parameters also display read-only lens and encoder status information.

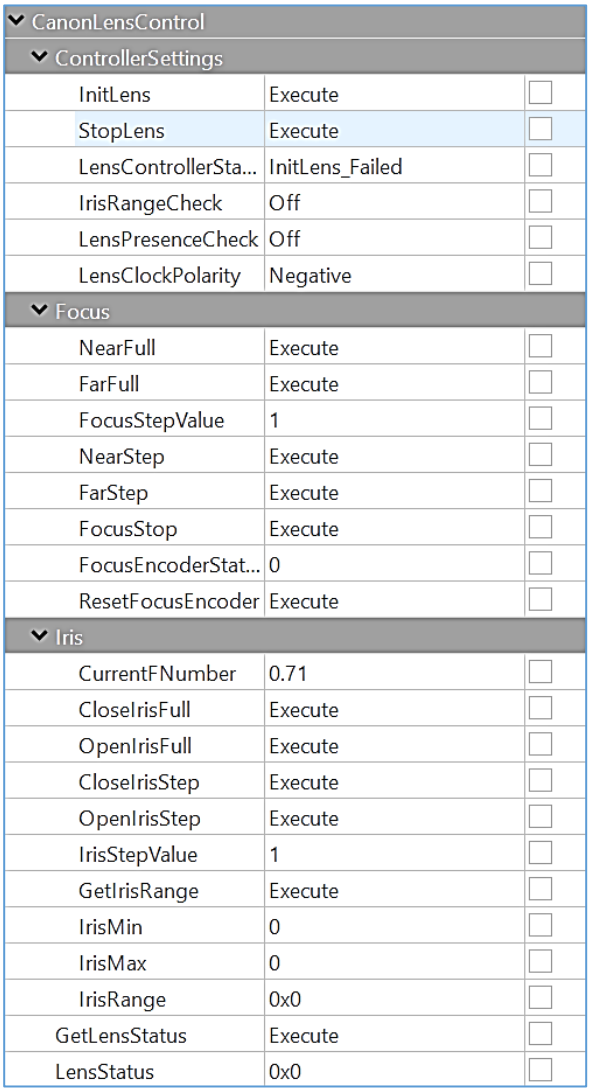

Figure 83: Canon Lens Control screen example.

Canon Lens Control_Controller Settings

Parameter Name	Type	Value	Access	Description
InitLens	Command		WO	Initializes the Canon Lens if lens is mounted on camera.
StopLens	Command		WO	Removes the power from the Iris drive. Run InitLens

Parameter Name	Type	Value	Access	Description
				command to resume the lens control.
LensControllerStatus	Enumeration	**String** **Num.** "InitLens_Failed" 0 "InitLens_Done" 1	RO	Shows the status of Canon Lens initialization.
IrisRangeCheck	Enumeration	**String** **Num.** "Off" 0 "On" 1	RW	Enables internal check of Iris Position and Step.
LensPresenceCheck	Enumeration	**String** **Num.** "Off" 0 "On" 1	RW	Enables or disables the check of lens presence
LensClockPolarity	Enumeration	**String** **Num.** "Negative" 0 "Positive" 1	RW	Sets the polarity of the Lens Clock

Canon Lens Control_Focus

Parameter Name	Type	Value	Access	Description
NearFull	Command		WO	Drives lens focus to fully near position.
FarFull	Command		WO	Drives lens focus to fully far position.
FocusStepValue	Integer	Min: 1 Max: 255	RW	Sets the focus step to move with NearStep and FarStep commands.
NearStep	Command		WO	Drives lens focus in the Near direction by amount defined by FocusStepValue.
FarStep	Command		WO	Drives lens focus in the Far direction by amount defined by FocusStepValue.
FocusStop	Command		WO	Stops the focus movement immediately.
FocusEncoderStatus	Integer		RO	Returns the current focus encoder value after the GetFocusEncoderStatus command is issued.
ResetFocusEncoder	Command		WO	Resets the Focus encoder.

Canon Lens Control_Iris

Parameter Name	Type	Value	Access	Description
CurrentFNumber	Float		RO	Returns the current f-number value of the lens iris. Value of 0.0 signals unknown iris position.
CloseIrisFull	Command		WO	Closes the iris to fully closed position.
OpenIrisFull	Command		WO	Opens the iris to fully opened position.
CloseIrisStep	Command		WO	Closes the iris by the amount defined by the IrisStepValue.
OpenIrisStep	Command		WO	Opens the iris by the amount defined by the IrisStepValue.
IrisStepValue	Integer	Min: 1 Max: 127	RW	Sets the iris step value for use with OpenStep and CloseStep commands.
GetIrisRange	Command		WO	Sends command to retrieve iris range from the camera.
IrisMin	Integer		RO	Returns the minimum iris limit.
IrisMax	Integer		RO	Returns the maximum iris limit.
IrisRange	Integer		RO	Returns the limit values of the iris after issuing GetIrisRange command.

Canon Lens Control_Iris

Parameter Name	Type	Value	Access	Description
GetLensStatus	Command		WO	Requests the value of the Lens Status register.
LensStatus	Integer		RO	Returns the status of the Lens after GetLensStatus runs.

4.2.12 Wide Dynamic Range (WDR)

Wide dynamic range (WDR) enables setting different exposure times for pixels of different intensities within one exposure time, for example, a short exposure time for ultra-bright pixels. WDR is not supported by T8820 or T8810 cameras.

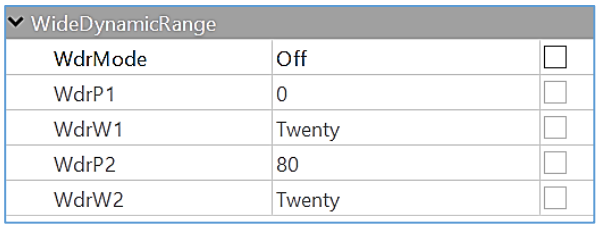

Figure 84: Wide Dynamic Range screen example.

Parameter Name	Type	Value	Access	Description
WdrMode	Enumeration	**String** / **Num.** "Off" 0 "OneKnee" 1 "TwoKnees" 2	RW	Sets the WDR operation mode.
WdrP1	Integer	Min: 0 Max: WdrP2Reg	RW	Sets the WDR's P1 exposure range value in units of percent.
WdrW1	Enumeration	**String** / **Num.** "Twenty" 0 "Thirty" 1 "Forty" 2 "Fifty" 3 "Sixty" 4 "Seventy" 5 "Eighty" 6 "Ninety" 7	RW	Sets the WDR's W1 weight value in units of percent.
WdrP2	Integer	Min: WdrP1Reg Max: 100	RW	Sets the WDR's P2 exposure range value in units of percent.
WdrW2	Enumeration	**String** / **Num.** "Twenty" 0 "Thirty" 1 "Forty" 2 "Fifty" 3 "Sixty" 4 "Seventy" 5 "Eighty" 6 "Ninety" 7	RW	Sets the WDR's W2 weight value in units of percent.

4.2.13 Temperature Control

Use the Temperature control XML parameters to set fan mode, temperature ranges, TEC mode, and so on.

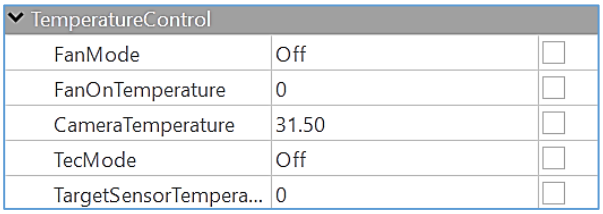

Figure 85: Temperature Control screen example.

Parameter Name	Type	Value	Access	Description
FanMode	Enumeration	**String** **Num.** "Off" 0 "On" 1 "Auto" 2	RW	Sets the operation mode of the camera fan.
FanOnTemperature	Integer	Min: 0 Max: 100	RW	Sets the target temperature (in degrees Celsius) that will turn on the fan in Auto mode.
CameraTemperature	Command	Min: -128 Max: 127.75	RO	Returns current camera temperature. The range is -128 Celsius to 127.75 Celsius.
TecMode	Enumeration	**String** **Num.** "Off" 0 "On" 1 "Auto" 2	RW	Sets the operation mode of the camera Thermo Electronic Control unit (TEC).
TargetSensorTemperature	Integer	Min: 0 Max: 100	RW	Sets target temperature that the camera's Thermo Electronic Control unit will attempt to reach (in degrees Celsius) in Auto mode.

4.2.14 Transport Layer Control

The Transport Layer control provides a variety of settings and read-only information for configuring communications between the camera with the CXP interface.

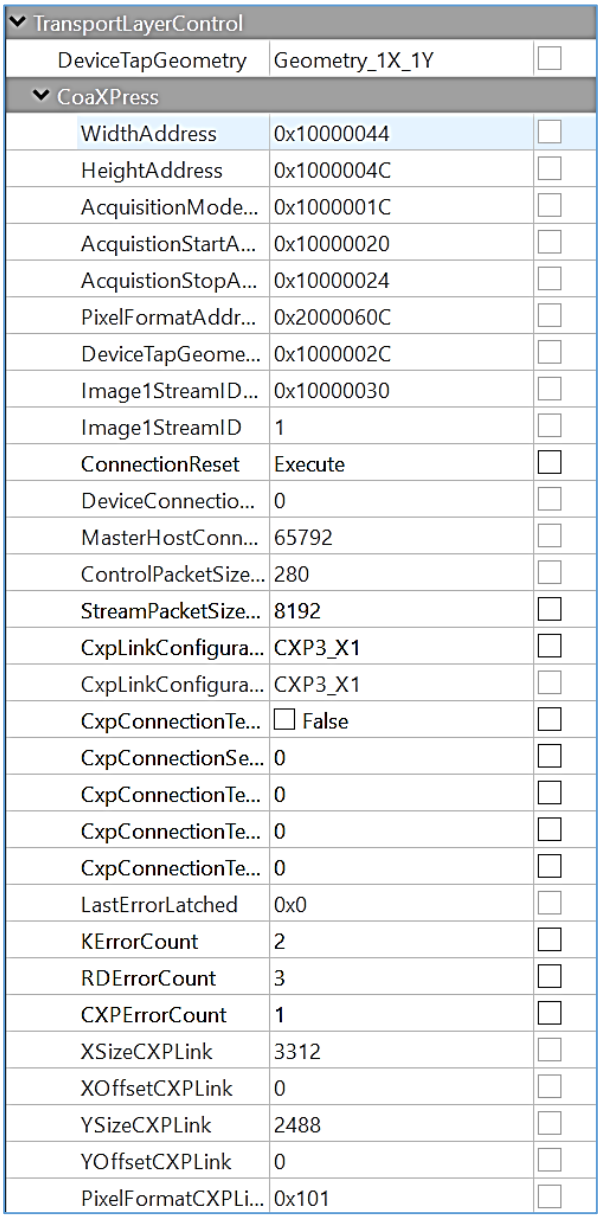

Figure 86: Transport Layer Control screen example.

Parameter Name	Type	Value	Access	Description
DeviceTapGeometry	Enumeration	**String** “Geometry_1X_1Y” **Num.** 0	RO	Describes the geometrical properties characterizing the

Parameter Name	Type	Value	Access	Description
				taps of the camera as presented at the output.

Transport Layer Control_CoaXPress

Parameter Name	Type	Value	Access	Description
WidthAddress	Integer		RO	Returns the Address of the Width information register.
HeightAddress	Integer		RO	Returns the Address of the Height information register.
AcquisitionModeAddress	Integer		RO	Returns the Address of the AcquisitionMode information register.
AcquistionStartAddress	Integer		RO	Returns the Address of the AcquistionStart command register.
AcquistionStopAddress	Integer		RO	Returns the Address of the AcquistionStop command register.
PixelFormatAddress	Integer		RO	Returns the Address of the PixelFormat information register.
DeviceTapGeometryAddress	Integer		RO	Returns the Address of the DeviceTapGeometry information register.
Image1StreamIDAddress	Integer		RO	Returns the Address of the Image1StreamID information register.
Image1StreamID	Integer		RO	Returns the Stream ID of the primary image stream from the device.
ConnectionReset	Command		RW	Activates the Link Reset procedure.
DeviceConnectionID	Integer		RO	Returns the ID of the device link.

MasterHostConnectionID	Integer		RO	Returns the Host link ID connected to the camera's master link.
ControlPacketSizeMax	Integer		RO	Returns the maximum control packet data size that the camera can accept.
StreamPacketSizeMax	Integer		RW	Returns the maximum stream packet data size that the host can accept.
CxpLinkConfiguration	Enumeration	**String** **Num.** “CXP1_X1” 0x00010028 "CXP3_X1" 0x00010038	RW	Allows specifying the Link configuration for communications between the Receiver and Transmitter Device. In most cases, this does not need to be written because automatic discovery will set configuration correctly to the value returned by CxpLinkConfigurationPreferred. Note: you can read the currently active configuration of the Link using CxpLinkConfigurationStatus.
CxpLinkConfigurationPreferred	Enumeration	**String** **Num.** "CXP1_X1" 0x00010028 "CXP2_X1" 0x00010030 "CXP3_X1" 0x00010038 "CXP5_X1" 0x00010040 "CXP6_X1" 0x00010048 "CXP1_X2" 0x00020028 "CXP2_X2" 0x00020030 "CXP3_X2" 0x00020038 "CXP5_X2" 0x00020040 "CXP6_X2" 0x00020048 "CXP1_X4" 0x00040028 "CXP2_X4" 0x00040030 "CXP3_X4" 0x00040038 "CXP5_X4" 0x00040040 "CXP6_X4" 0x00040048	RO	Provides the Link configuration enabling the transmitter device to operate in its default mode.

CxpConnectionTestMode	Boolean		RW	Enables the test mode for an individual physical connection of the camera.
CxpConnectionSelector	Integer	Min: 0 Max: CxpMaxConnectionsExpr	RW	Selects the CoaXPress physical connection to control.
CxpConnectionTestErrorCount	Integer		RW	Reports current connection error count of test packets received by the camera on the connection selected by CxpConnectionSelector.
CxpConnectionTestPacketCount	Integer		RW	Reports current count of test packets received by the camera on the connection selected by CxpConnectionSelector.
CxpConnectionTestPacketCountTx	Integer		RW	Reports current count of test packets sent by the camera on the connection selected by CxpConnectionSelector.
LastErrorLatched	Integer		RO	Returns the low-speed link's last CXP error.
KErrorCount	Integer		RW	Returns the low-speed link's current 8B10B K-Code error count. Writing a 0x0 clears the error counter.
RDErrorCount	Integer		RW	Returns the low-speed link's current 8B10B Running-Disparity error count. Writing a 0x0 clears the error counter.
CXPErrorCount	Integer		RW	Returns the low-speed link's current CXP protocol error count. Writing a 0x0 clears the error counter.
XSizeCXPLink	Integer		RO	Returns the Horizontal image size in the CXP link.

XOffsetCXPLink	Integer		RO	Returns the Horizontal image offset in the CXP link.
YSizeCXPLink	Integer		RO	Returns the Vertical image size in the CXP link.
YOffsetCXPLink	Integer		RO	Returns the Vertical image offset in the CXP link.
PixelFormatCXPLink	Integer		RO	Returns the Pixel Format in the CXP link.

4.2.15 User Set Control

User Set Control enables you to save custom settings and reload them into the camera as needed.

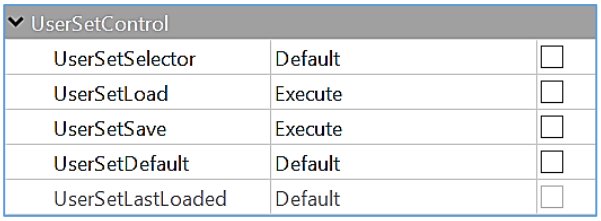

Figure 87: User Set Control screen example.

Parameter Name	Type	Value		Access	Description
UserSetSelector	Enumeration	**String** "Default" "UserSet0" "UserSet1" "UserSet2" "UserSet3"	**Num.** 0 1 2 3 4	RW	Selects the User Set to load, save, or configure.
UserSetLoad	Command			WO	Loads the User Set specified by UserSetSelector to the camera and makes it active.
UserSetSave	Command			WO	Saves the User Set specified by UserSetSelector to the camera's non-volatile memory.

Parameter Name	Type	Value		Access	Description
UserSetDefault	Enumeration	**String** "Default" "UserSet0" "UserSet1" "UserSet2" "UserSet3"	**Num.** 0 1 2 3 4	RW	Selects the User Set to load and make active when the camera is reset or upon power-up.
UserSetLastLoaded	Enumeration	**String** "Default" "UserSet0" "UserSet1" "UserSet2" "UserSet3"	**Num.** 0 1 2 3 4	RO	Reports the User Set currently loaded (from the last UserSetLoad command or device reset).

4.2.16 Special Features

The Special Features XML parameters provides status information on the camera and on GenICam transport layer streaming.

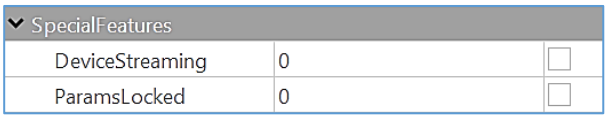

Figure 88: Special Features screen example.

Parameter Name	Type	Value	Access	Description
DeviceStreaming	Integer		RO	Returns the state of the Camera streaming interface to 1 when grabbing or 0 when not grabbing.
ParamsLocked	Integer		RO	Returns the state of the GenTL or Camera streaming interface to 1 when grabbing or 0 when not grabbing.

5 Camera Features

5.1 Bad Pixel Correction

Bad pixels have a sensitivity that deviates more than 15% from neighboring pixels due to fluctuations in the CCD manufacturing process. A defective pixel with sensitivity lower than neighboring pixels is described as dark. A defective pixel with sensitivity higher than adjacent pixels is described as bright.

Hot pixels are single pixel defects that are brighter than the surrounding pixels and therefore easily seen by the user. Hot pixels result from minor flaws in the manufacturing process or from miniscule contaminants introduced during the image sensor manufacturing process.

Hot pixels vary in their intensity and characteristics, but all hot pixels have one common characteristic: their intensity increases dramatically with temperature. A hot pixel can double in brightness with temperature increases as small as 6 degrees Centigrade. The wide variety of hot pixel types and the wide degree of variability of hot pixel intensity characteristics makes it difficult for the camera manufacturer to effectively predict and correct all hot pixels. For this reason, Imperx developed dynamic hot pixel correction. The camera performs dynamic hot pixel correction by examining the image output in real-time and identifying pixels that are brighter than surrounding pixels based on a user-defined threshold. The defined threshold gives you control of the correction process, so you can decide what level of hot pixel brightness is unacceptable.

One caution, if you set the dynamic hot pixel threshold too small, random shot noise in a pixel may implement an unwanted correction.

5.2 FFC Correction

Each pixel within a CCD array has unique light sensitivity characteristics that cause deviation in the pixel's response to illumination. Most of the deviation is due to the difference in the angle of incidence and to charge transport artifacts creating an effect called shading. During factory final testing, Imperx engineers run a program designed to identify the shading characteristics of the camera. The program creates a Flat Field Correction (FFC) file containing coefficients describing these shading characteristics. This file is downloaded into the camera's non-volatile memory.

When Flat Field Correction is enabled, the camera uses the Flat Field Correction coefficients to compensate for the shading effect. The camera supports two FFC tables. The factory creates and preloads one of the tables. Users can create a second FFC table.

5.3 Digital Gain, Offset, and Shift

The camera provides independent digital gain, offset, and shift correction.

- Digital Gain increases image brightness by multiplying the data by a fixed number, 1x to 4x, at 0.001 increments.
- Digital Offset increases the image brightness by adding a fixed number to data.
- Digital Shift rotates the bits (effectively multiplying the output intensity by 2 for each shift left and dividing the output intensity by 2 for each shift to the right).

5.4 Area of Interest

The camera lets you configure the overall image size using the Master Area of Interest (MAOI). You can also create a Slave Area of Interest (SAOI) within the MAOI area of view. You must make the SAOI size dimensions smaller that the MAOI dimensions.

5.5 Look-up Table

Look-up tables (LUT) enable modifying and transforming the original video data into any arbitrary value. It transforms any 12-bit value into any other 12-bit value. The camera supports up to four separate lookup tables, each consisting of 4096 entries, with each entry 12 bits wide. The first LUT is pre-configured with Gamma 0.65 while the other LUTs must be loaded by the User.

5.6 White Balance

White balance eliminates color variations due to the color temperature of the light source. With white balance correction enabled, the camera collects the chrominance data for each of the primary colors R, G, and B, analyzes it, and adjusts the color setting to preserve the original colors and make white objects appear white.

5.7 Automatic Gain and Exposure Control

Automatic gain and exposure control maintains image brightness during changing light conditions. It allows you to set and maintain the image brightness (luminance), and the camera adjusts the gain and exposure accordingly. The camera always increases the exposure until the maximum exposure limit is reached before applying gain.

5.8 Configurable Bit Depth

The camera lets you sets the bit depth at 8 bits, 10 bits, or 12 bits (options might vary by camera model). At 12 bits, the camera produces more tonal values.

5.9 ESD Event Protection

If the camera is subject to an electrostatic discharge (ESD) or power failure event, the internal power protection might engage. The protection will disable the power to the CCD, display a warning, and display a special pattern on the screen. We recommend repowering the camera. You can reset the power by sending a power reset command to the camera: 0x57600000000001.

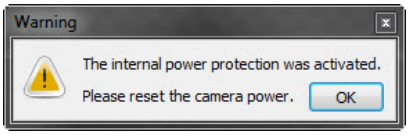

Figure 89: ESD protection warning.

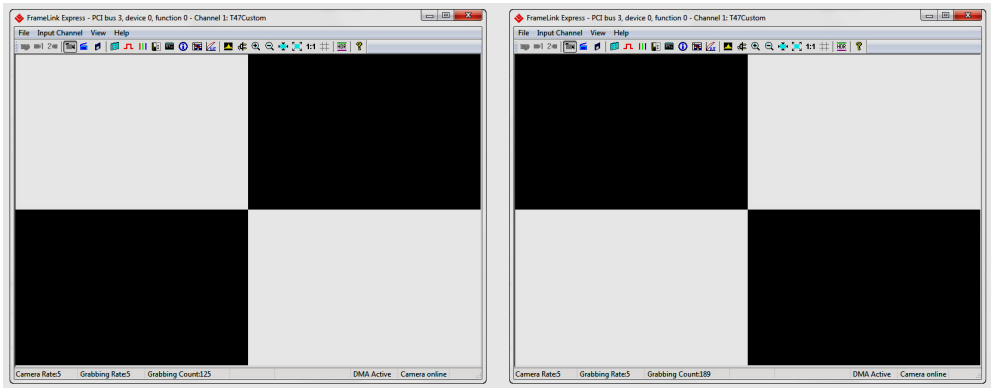

Figure 90: Alternating test patterns appear when an ESD event occurs.

6 Technical Support

Each camera is fully tested before shipping. If for some reason the camera is not operational after power up, check the following:

1. Check the power supply and all I/O cables. Make sure that all the connectors are firmly attached.
2. Check the status LED and verify that it is steady ON Green. If it is not. refer to the LED section.
3. Enable the test mode and verify that the communication between the frame grabber and the camera is established. If the test pattern is not present, power off the camera, check all the cabling, frame grabber settings and computer status.

If you still have problems with the camera operation, please contact technical support at:

Email: techsupport@imperx.com
Toll Free 1 (866) 849-1662 or (+1) 561-989-0006
Fax: (+1) 561-989-0045
Visit our Web Site: www.imperx.com

Appendix A – Creating LUT Tables

This appendix provides a reference on how to create lookup tables, defective pixel maps, and hot pixel maps.

A.1 Creating LUT Tables

You can create a look-up table (LUT) file using any standard ASCII text editor such as Microsoft Notepad or similar. You can also use a spreadsheet program like Microsoft Excel by converting the spreadsheet to a comma delimited (.csv) file. When finished creating the file, you must rename it to include the .lut extension.

You can also use any mathematical program capable of generating a comma delimited (.csv) file.

TIP

Regardless of the software application you use to create a LUT, you must rename the file to include the .lut file extension. The .lut file has two main sections: a header and a table.

A.1.1 Using an ASCII Text Editor

The header section of a file created with an ASCII editor like Microsoft Notepad is a free text area of up to 256 ASCII characters. You must end each line of the header section with a comma. The table section of the file contains an array of lines for a mono camera and three times the number of lines for a color camera. Each line will contain an input value followed by a comma and an output value. The input values represent incoming pixels; output values represent the conversion value of each pixel at output.

The following example shows the format of the .LUT file for a mono camera with 4096 lines:

```
-- Look Up Table input file example,
-- lines beginning with two dashes are comments,
-- and are ignored by parser,
:Header,
-- this is the text that will get displayed with a 'glh'
command,
Function is 'Negative Image',
Created by John Doe,
Date 1/14/09,
:Table,
-- input output,
      0,4095
      1,4094
```

```
2,4093
3,4092
4,4091
:
4095,0
```

A.1.2 Using Microsoft Excel

You can create the .LUT file in Excel as follows:

1. Create the spreadsheet as shown below (note that 1024 (1024*3) rows are required in the table).
2. Add the necessary equations into the output cells to generate the transfer function required.
3. Save the file as a .csv file (comma-delimited format).
4. Rename the .csv file to an extension of .lut.

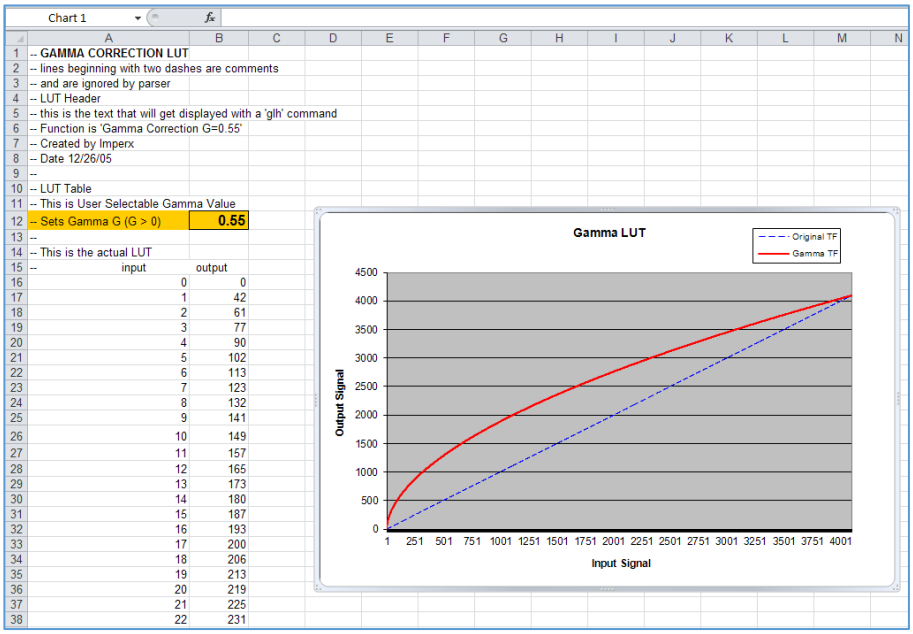

Figure 91: LUT example.

A.2 Creating Corrective Maps

The camera includes a Defective Pixel Map (DPM) and Hot Pixel Map (HPM). You can create your own DPM or HPM file using any standard ASCII text editor or Microsoft Excel. Additionally, you can use any spreadsheet or mathematical program capable of generating a comma delimited (.csv) file.

When creating your own corrective map, you must apply a .dpm extension for a DPM map and a .hpm extension for a HPM map. The .dpm or .hpm file has two main sections: a header and a table. The header section is a free text area up to 256 ASCII characters. You

must terminate each line of the header section with a comma. The table section of the file contains an array of lines with each line containing an X (pixel number) value followed by a comma and a Y (line number) value. List all pixels in the DPM or HPM in order of increasing Y location. If the Y location is identical, the listing is in order of increasing X location. After editing, save each file with the appropriate file extension. The maximum number of pixels in the DMP list is 128. The maximum number in the HPM list is 1024.

The following example shows how to create a simple DPM. Locate the defective pixels in the camera and enter them in order starting with the smallest pixel number of the line number. The example uses pixel 4 from line 1 as the first entry. The next entry is pixel 588 from line 1, and the next entry is pixel 78 from line 5, and so on.

```
-- Defective Pixel Map,
-- Date: 7/21/2013,
-- Model#: CLB-B0610M,
-- Serial#: 060380,
:Table,
-- Column(X),Row(Y)
                4,1
              588,1
               78,5
               82,27
              405,300
```

Appendix B – Camera Registers

B.1 Camera RGS Space Structure

Abbreviation	Description
RW	read/write
RO	read only
WO	write only
RW1C	Read/write-1 to clear

B.1.1 Camera Local Space

Saving and Restoring Settings

Operational settings for the camera are stored in non-volatile FLASH memory. Five separate configuration spaces exist (see Camera Factory Space above).

Address	Register Name	Data	Type	Description
0x5000	Boot From Register	Data (2:0) 0x0 – Factory 0x1 – User 1 0x2 – User 2 0x3 – User 3 0x4 – User 4 0x5 to 0x7 - reserved Data (31:3) N/A	RW	Sets default selector determining the configuration space to load following a power cycle or reset.
0x6060	User Set Selector	Data (2:0) 0x0 – Factory 0x1 – User 1 0x2 – User 2 0x3 – User 3 0x4 – User 4 0x5 to 0x7 - reserved Data (31:3) N/A	RW	Determines FLASH sector which will be loaded into the camera workspace or saved from workspace.
0x6064	User Set Load		WO	Loads workspace from selected User space or Factory Space as defined by register 0x6060 contents.
0x6068	User Set Save		WO	Saves workspace to selected User space as defined in register 0x6040.

Camera Information Registers

These provide information on camera current status, frame rate, exposure time, image size, and so on.

Address	Register Name	Data	Type	Description
0x6070	Horizontal Frame Size (Max, Min)	Data (15:0) <Min. Hor. Size> Data (31:16) <Max. Hor. Size>	RO	Returns min./max. horizontal image frame size in pixels. Max. hor. size is a dynamic parameter based on LVAL selection.
0x6074	Vertical Frame Size (Max, Min)	Data (15:0) <Min. Ver. Size> Data (31:16) <Max. Ver. Size>	RO	Returns min./max. vertical image frame size in lines. Max. vert. size is a dynamic parameter based on FVAL selection.
0x6078	Current Image Size	Data (15:0) <Current Hor. Size> Data (31:16) <Max. Ver. Size>	RO	Returns current image frame size in pixels. Image size is a dynamic parameter based on camera mode of operation.
0x6080	Current Frame Time	Data (31:0) <Current Frame Time>	RO	Returns current camera frame time in microseconds.
0x6084	Minimum Frame Time	Data (23:0) <Min. Frame Time> Data (31:24) <N/A>	RO	Returns current minimum frame time in microseconds.
0x6088	Current Camera Exposure	Data (23:0) <Current Exposure Time> Data (31:24) <Max. Exposure Time>	RO	Returns current and maximum camera exposure time in microseconds.
0x60A0	Current Gain & Luminance Status	Data (9:0) <Current Analog Gain Ch. A> Data (23:12) <Current Average Luminance> Data (24) <Analog Gain Min. Limit Reached> Data (25) Analog Gain Max. Limit Reached> Data (27, 26) N/A Data (28) <Exposure Min. Limit Reached> Data (29) <Exposure Max. Limit Reached> Data (31: 30) N/A	RO	Returns current analog gain for Ch. A and current average image luminance during normal AGC operation. Current Analog Gain Ch. A (register bits D11:D0) displays: • Current slider gain during normal operation. • Calculated AGC gain when AGC/AEC is enabled.
0x6094	Current WBC for Red and Green	Data (11:0) <Current Red WBC> Data (23:12) <Current Green WBC> Data (31:24) N/A	RO	Returns current white balance coefficient values for Red and Green.
0x6098	Current WBC for Blue and White	Data (11:0) <Current Blue WBC> Data (23:12) <Current White WBC> Data (31:24) N/A	RO	Returns current white balance coefficient values for Blue and White.
0x60A4	Analog Gain Ch. B, Ch. C & Ch. D	Data (9:0) <Current Analog Gain Ch. B> Data (19:10) <Current Analog Gain Ch. C> Data (29:20) <Current Analog Gain Ch. D> Data (31:30) N/A	RO	Returns camera information for analog gains for channels B, C, D.
0x6010	Current Camera Temperature	Data (9:0) <Current Camera Temperature>	RO	Returns current camera temperature in degrees Celsius. Temperature resolution is 0.25°C

		Data (31:10) N/A **Temp.** **Register Value** +127.75 °C 01 1111 1111 +0.25 °C 00 0000 0001 0° C 00 0000 0000 -0.25 °C 11 1111 1111 -128 °C 10 0000 0000		

Miscellaneous

Address	Register Name	Data	Type	Description
0x6000	Power Reset	Data 00000001	WO	Resets the CCD power after ESD event
0x601C	SW_Reset	Data 0xDEADBEEF	WO	Command initiates software reset (loads workspace from config spaces set by Boot From data). You must write data 0xDEADBEEF to initiate reset.
0x0604	BAUD Rate Selector	Data (2:0) 0x0 – 9600 0x1 – 19200 0x2 – 38400 0x3 – 57600 0x4 – 115200 (default) 0x5 to 0x7 - reserved Data (31:3) N/A	RW	Sets communication baud rate between camera and computer.

EOS Lens Control Information Registers

(Tiger ruggedized version only)

Address	Register Name	Data	Type	Description
0x6200	IRIS Step Value	Data (7:0) <IRIS Step> Data (31:8) N/A	RW	Sets the IRIS step increment value.
0x6204	IRIS Close Step		WO	Closes IRIS one step per command. The step value is set above 0x6200.
0x6208	IRIS Open Step		WO	Opens IRIS one step per command. The step value is set above 0x6200.
0x620C	IRIS Close Full		WO	Command fully closes the IRIS.
0x6210	IRIS Open Full		WO	Command fully opens the IRIS.
0x6214	IRIS Stop		WO	Command stops IRIS movement.
0x6218	FOCUS Step Value	Data (7:0) <FOCUS Step> Data (31:8) N/A	WR	Sets FOCUS step increment value.
0x621C	FOCUS Close Step		WO	Closes FOCUS one step per command. The step value is set above 0x6218.
0x6220	FOCUS Open Step		WO	Opens FOCUS one step per command. The step value is set above 0x6218.

0x6224	FOCUS Near Full			WO	Command sets FOCUS to full near position.
0x6228	FOCUS Far Full			WO	Command sets FOCUS to full far position.
0x622C	FOCUS Stop			WO	Command stops FOCUS if/while its moving.
0x6230	CANON Lens Init			WO	Command initializes CANON lens.
0x6234	CANON Get Aperture Range			WO	Command gets CANON lens aperture range.
0x6238	CANON Get Lens Status			WO	Command gets CANON lens status.
0x623C	CANON Get FOCUS Encoder Value			WO	Command gets CANON lens encoder value.
0x6240	CANON Reset FOCUS Encoder Value			WO	Command that gets the CANON lens reset encoder value.
0x6244	CANON Lens IRIS Range Check			WO	Command gets IRIS Range Check value.
0x6248	CANON Lens LCLK Polarity			WO	Command sets CANON lens Clock polarity.
0x6258	CANON IRIS State	Data (31:10)	<IRIS State>	RO	Holds IRIS state value.
0x625C	CANON FOCUS State	Data (15:0) Data (31:16)	<FOCUS State> N/A	RO	Holds FOCUS state value.
0x6260	CANON Lens Status	Data (15:0) Data (31:16)	<Lens Status> N/A	RO	Holds Lens Status value.
0x6264	CANON Lens Controller Status	Data (15:0) Data (31:16)	<Lens Controller Status> N/A	RO	Holds Lens Controller Status value.

B.1.2 Camera Information

Address	Register Name	Data	Type	Description
0x7000, 0x7004, 0x7008, 0x700C	Assembly Part Number	<Assembly Part Number 1, 2, 3, 4>	RO	Returns camera assembly part number – complete number is 4 registers.
0x7010, 0x7014	Camera Serial Number	<Camera Serial Number 1, 2>	RO	Returns camera serial number – complete number is 2 registers.
0x7018, 0x701C	CCD Serial Number	<CCD Serial Number>	RO	Returns CCD imager number – complete number is 2 registers.
0x7020, 0x7024	Date of Manufacture	<Date of Manufacture>	RO	Returns camera manufacture date. Complete date of is 2 registers.
0x7028, 0x702C, 0x7030, 0x7034, 0x7038	Camera Type	<Camera Type 1, 2, 3, 4, 5>	RO	Returns camera type – complete assembly is 5 registers.

Firmware Information

Address	Register Name	Data		Type	Description
0x6004	Firmware Revision	Data (31:28) Data (27:24) Data (23:0)	<FW image> <CCD Color> <FW revision>	RO	Returns camera main firmware revision.
0x6008	Firmware Parameters	Data (15:0) Data (19:16) Data (23:20) Data (27:24) Data (31:28)	<Custom ID #> <EPCS Type> <FPGA Type> <CCD Chip ID> <Application type>	RO	Returns firmware parameters (FPGA type, EPCS type, Customer ID #) that track custom firmware for specific applications.
0x6038	Firmware Build Number	<FBN revision>		RO	Returns firmware build number that tracks custom firmware for specific applications.

B.1.3 Parameter Registers

Image Size (AOI) Registers

Address	Register Name	Data		Type	Description
0x0500	Vertical Binning Mode	Data (1:0) Data (31:2)	0x0 – 1x vertical binning 0x1 – 2x vertical binning 0x2 – N/A (3x) 0x3 – 4x vertical binning N/A	RW	Sets current binning format in vertical direction (5 vertical binning options).
0x0204	Horizontal Binning Mode	Data (1:0) Data (31:2)	0x0 – 1x horizontal binning 0x1 – 2x horizontal binning N/A (3x) 0x3 – 4x horizontal binning N/A	RW	Sets current binning format in horizontal direction (5 horizontal binning options).
0x0208 (always on, no user control)	MAOI Enable	Data (0) Data (31:1)	0x0 – MAOI disable 0x1 – MAOI enable N/A		Enables Master AOI and sets window size and offset in horizontal and vertical direction.
0x0248	MAOI Horizontal Offset	Data (12:0) Data (31:13)	<value> MAOI horizontal offset N/A	RW	Sets offset in horizontal direction.
0x0228	MAOI Horizontal Width	Data (12:0) Data (31:13)	<value> MAOI horizontal width N/A	RW	Sets width in horizontal direction.
0x0288	MAOI Vertical Offset	Data (12:0) Data (31:13)	<value> MAOI vertical offset N/A	RW	Sets offset in vertical direction.
0x0268	MAOI Vertical Height	Data (12:0) Data (31:13)	<value> MAOI vertical height N/A	RW	Sets height in vertical direction.

0x020C	SAOI Enable	Data (2:0) Data (31:3)	0x1 – SAOI include 0x2 – SAOI exclude 0x3 – ROI for AEC/AGC include – optional 0x4 – ROI for AEC/AGC exclude – optional 0x5 – ROI for AWB include – optional 0x6 – ROI for AWB exclude – optional 0x7 – ROI for LUT include – optional 0x8 – ROI for LUT exclude – optional N/A	RW	Enables Slave AOI and sets window size and offset in horizontal and vertical direction.
0x024C	SAOI Horizontal Offset	Data (12:0) Data (31:13)	<value> SAOI horizontal offset N/A	RW	Sets SAOI horizontal offset
0x022C	SAOI Horizontal Width	Data (12:0) Data (31:13)	<value> SAOI horizontal width N/A	RW	Sets SAOI horizontal width
0x028C	SAOI Vertical Offset	Data (12:0) Data (31:13)	<value> SAOI vertical offset N/A	RW	Sets SAOI vertical offset
0x026C	SAOI Vertical Height	Data (12:0) Data (31:13)	<value> SAOI vertical height N/A	RW	Sets SAOI vertical height
0x0200	Frame Rate Control	Data (0) Data (31:1)	0x0 – constant frame rate disable 0x1 – constant frame rate enable N/A	RW	Enables camera frame rate to stay the same and independent of AOI vertical window size.

Exposure Control Registers

Address	Register Name	Data		Type	Description
0x0544	Exposure Mode	Data (1:0) Data (31:2)	0x0 – off – no exposure control 0x1 – pulse width – selected trigger pulse duration determines exposure during triggering 0x2 – internal – exposure control register 0x0548 sets camera exposure 0x3 – N/A N/A	RW	Sets camera exposure control mode.
0x0548	Exposure Time Absolute	Data (23:0) Data (31:24)	<value> – actual exposure time in micro seconds. N/A	RW	Sets camera exposure time when Internal exposure mode is selected.
0x0550	Long Integration Enable	Data (0) Data (31:1)	0x0 – disable Long Integration time 0x1 – enable Long Integration time N/A	RW	Enables long integration time mode (up to 16 sec. beyond free running frame time).

0x0558	Long Integration Time	Data (23.0) Data (31:24)	<value> – actual frame time in micro seconds. N/A	RW	Sets long integration time in microseconds.

AEC, AGC Workspace Registers

Address	Register Name	Data		Type	Description
0x0150	Auto Exposure Control (AEC)	Data (0) Data (31:1)	0x0 – disable auto exposure control 0x1 – enable auto exposure control N/A	RW	Enables the auto exposure control.
0x05B0	Maximum Exposure Time Limit	Data (23:0) Data (31:24)	<value> – maximum exposure time limit N/A	RW	Sets max. exposure time limit during AEC.
0x05C8	Minimum Exposure Time Limit	Data (23:0) Data (31:24)	<value> – minimum exposure time limit N/A	RW	Sets min. exposure time limit during AEC.
0x0154	Auto Gain Control (AGC)	Data (0) Data (31:1)	0x0 – disable auto gain control 0x1 – enable auto gain control N/A	RW	Enables auto gain control.
0x0160	Maximum Gain Limit	Data (9:0) Data (31:10)	<value> – maximum analog gain limit N/A	RW	Sets max. analog gain limit during AGC.
0x018C	Minimum Gain Limit	Data (9:0) Data (31:10)	<value> – minimum analog gain limit N/A	RW	Sets min. analog gain limit during AGC.
0x0158	Luminance Level Threshold	Data (11:0) Data (31:12)	<value> – desired luminance level N/A	RW	Sets luminance level to maintain during AEC/AGC.
0x017C	Luminance Type Selection	Data (1:0) Data (31:2)	0x0 – average luminance 0x1 – peak luminance 0x2 or 0x3 – reserved N/A	RW	Sets luminance mode to use during AEC or AGC process.

Gain and Offset Workspace Registers

Address	Register Name	Data		Type	Description
Below: VGA gain, 0dB to 30dB (0.03519 dB per step)					
0x0004 0x0014 0x0024 0x0034	AFE 1 Analog Gain, Ch. A AFE 1 Analog Gain, Ch. B AFE 1 Analog Gain, Ch. C AFE 1 Analog Gain, Ch. D	Data (9:0) Data (31:10) **Applies to all cameras**	<value> N/A	RW	Sets main analog gain.
0x0044 0x0054 0x0064 0x0074	AFE 2 Analog Gain, Ch. E AFE 2 Analog Gain, Ch. F AFE 2 Analog Gain, Ch. G AFE 2 Analog Gain, Ch. H	Data (9:0) Data (31:10) **Applies to cameras T8810, T8820 only**	<value> N/A	RW	Sets main analog gain.
0x0084 0x0094 0x00A4 0x00B4	AFE 3 Analog Gain, Ch. I AFE 3 Analog Gain, Ch. J AFE 3 Analog Gain, Ch. K AFE 3 Analog Gain, Ch. L	Data (9:0) Data (31:10) **Applies to camera T8820 only**	<value> N/A	RW	Sets main analog gain.

0x00C4 0x00D4 0x00E4 0x00F4	AFE 4 Analog Gain, Ch. M AFE 4 Analog Gain, Ch. N AFE 4 Analog Gain, Ch. O AFE 4 Analog Gain, Ch. P	Data (9:0) <value> Data (31:10) N/A **Applies to camera T8820 only**	RW	Sets main analog gain.
Analog Offset				
0x0008 0x0018 0x0028 0x0038	AFE 1 Analog Offset, Ch. A AFE 1 Analog Offset, Ch. B AFE 1 Analog Offset, Ch. C AFE 1 Analog Offset, Ch. D	Data (11:0) <value> Data (31:12) N/A **Applies to cameras T6640, T8810, T8820**	RW	Sets analog offset.
0x0048 0x0058 0x0068 0x0078	AFE 2 Analog Offset, Ch. E AFE 2 Analog Offset, Ch. F AFE 2 Analog Offset, Ch. G AFE 2 Analog Offset, Ch. H	Data (11:0) <value> Data (31:12) N/A **Applies to cameras T8810, T8820**	RW	Sets analog offset.
0x0088 0x0098 0x00A8 0x00B8	AFE 3 Analog Offset, Ch. I AFE 3 Analog Offset, Ch. J AFE 3 Analog Offset, Ch. K AFE 3 Analog Offset, Ch. L	Data (11:0) <value> Data (31:12) N/A **Applies to camera T8820 only**	RW	Sets analog offset.
0x00C8 0x00D8 0x00E8 0x00F8	AFE 4 Analog Offset, Ch. M AFE 4 Analog Offset, Ch. N AFE 4 Analog Offset, Ch. O AFE 4 Analog Offset, Ch. P	Data (11:0) <value> Data (31:12) N/A **Applies to camera T8820 only**	RW	Sets analog offset.
Digital Gain, Offset, Black Level Correction, Tap Balance				
0x0180	Digital Gain	Data (9:0) <value> – digital gain Data (31:10) N/A	RW	Sets main digital gain and applies to both channels. The step is 0.001x.
0x0184	Digital Offset	Data (9:0) <value> – digital offset Data (31:10) N/A	RW	Sets main digital offset and applies to both channels.
0x0114	Black Level Correction	Data (0) 0 – disable black level correction 1 – enable black level correction Data (31:2) N/A	RW	Enables black level correction.
0x0110	Tap Balance	Data (9:0) 00 – no tap balance 01 – dynamic automatic tap balance 10 – tap balance once Data (31:10) N/A	RW	Toggling from “00” to “10” will balance taps only one time.

Triggering Registers

Address	Register Name	Data	Type	Description
0x05BC	Acquisition Mode	Data (0) 0x1 – trigger is disabled, free running mode 0x0 – trigger is enabled – camera is in trigger mode Data (31:1) N/A	RW	Enables or disables the triggering operation for all cameras.

0x0508	Trigger Input Selector	Data (2:0) Data (31:3)	0x0 – N/A 0x1 – External 1 – camera expects trigger from external source mapped IN 1. 0x2 – Internal – camera expects trigger from programmable pulse generator. 0x3 – computer – camera expects trigger from CC1 via camera link cable. 0x4 – software trigger – camera expects a one clock cycles pulse from computer. Trigger exposure is internal register controlled. Pulse duration exposure is not allowed. 0x5 – External 2 – camera expects trigger from external source mapped IN 2. 0x6 to 0xF – N/A N/A	RW	Selects triggering source.
0x6030	Software Trigger Start (Command)			WO	Generates one short trigger pulse. Writing to address initiates pulse generation.
0x050C	Triggering Edge Selector	Data (0) Data (31:1)	0x0 – rising edge 0x1 – falling edge N/A	RW	Selects triggering edge – Rising or Falling.
0x0510	Trigger De-bounce Time	Data (15:0) Data (31:16)	<value> – de-bounce time um us. N/A	RW	Selects trigger signal de-bounce time.
0x0514	Trigger Overlap	Data (1:0) Data (31:20)	0x0 – ignore the next trigger 0x1 – accept only after the exposure is completed 0x2 – accept at any time 0x3 – N/A N/A	RW	Selects trigger overlap mode.
0x0518	Triggering Mode Selection	Data (3:0) Data (31:4)	0x0 – standard triggering 0x1 – fast triggering 0x2 – double triggering N/A	RW	Selects triggering mode.
0x051C	Number of Frames Captured	Data (15:0) Data (31:16)	<value> – # of frames captured N/A	RW	Selects number of frames captured after each trigger signal.
0x05CC	Glitch Filter Time Select	Data (15:0) Data (31:16)	<value> – maximum glitch time in us N/A	RW	Selects maximum glitch time in microseconds for noisy trigger lines.
0x0528	Trigger Exposure Delay	Data (23:0) Data (31:24)	<value> – exposure delay in microseconds N/A	RW	Selects delay between trigger signal and beginning of exposure.
0x0524	Trigger Strobe Enable	Data (1:0) Data (31:2)	0x0 – no strobe signal 0x1 – enable Strobe #1 0x2– enable Strobe #2 0x3 – enable Strobe #1 and Strobe #2 N/A	RW	Enables strobe signal sync with trigger pulse. Strobe signal is mapped to one or both strobe outputs.

0x052C	Trigger Strobe Position Delay	Data (23:0) <value> – trigger strobe delay Data (31:24) N/A	RW	Sets delay between trigger pulse and strobe pulse.

Pulse Generator Registers

Address	Register Name	Data	Type	Description
0x0530	Pulse Generator Timing Granularity	Data (1:0) 0x0 – x1 0x1 – x10 0x2– x100 0x3 – x1000 Data (31:2) N/A	RW	Sets pulse generator main timing resolution.
0x0534	Pulse Generator Pulse Width	Data (23:0) <value> – pulse width in microseconds Data (31:24) N/A	RW	Sets value of pulse width in microseconds.
0x0538	Pulse Generator Pulse Period	Data (23:0) <value> – pulse width in microseconds Data (31:24) N/A	RO	Sets value of pulse period in microseconds.
0x053C	Pulse Generator Number of Pulses	Data (15:0) <value> – number of discrete pulses Data (16) 0x1 – continuous pulse gen. Data (31:17) N/A	RW	Sets number of pulses generated.
0x0540	Pulse Generator Enable	Data (0) 0x0 – disable pulse gen. operation 0x1 – enable pulse gen. operation Data (31:10) N/A	RW	Enables pulse generator.

Test Pattern Workspace Registers

Address	Register Name	Data	Type	Description
0x012C	Test Mode Select	Data (3:0) 0x0 – no test pattern 0x1 – BW checkerboard 0x2 – gray image – user selectable value 0x3 – tap segmented (each tap has a fixed value). Tap A – 0xAAA, Tap B – 0xBBB, Tap C – 0xCCC, Tap D – 0xDDD 0x4 – steady horizontal image ramp 0x5 – steady vertical image ramp 0x6 – steady vertical & horizontal image ramp 0x7 – moving vertical & horizontal image ramp 0x8 – 8 gray scale vertical bars 0x9 – Center cross superimposed over live image 0xA to 0xF - reserved Data (31:4) N/A	RW	Selects test mode pattern.

Output Registers

Address	Register Name	Data		Type	Description
0x0590 0x0598	OUT 1 Polarity OUT 2 Polarity	Data (0) Data (31:1)	0x0 – active LOW 0x1 – active HIGH N/A	RW	Sets polarity (active Low or High) for OUT1 or OUT2 output.
0x0594 0x059C	OUT 1 Output Mapping OUT 2 Output Mapping	Data (7:0) Data (31:8)	0x00 – no mapping 0x01 – exposure start 0x02 – exposure end 0x03 – mid exposure 0x04 – active exposure window 0x05 – H sync 0x06 – V sync 0x07 – odd/even frame flag 0x08 – trigger pulse actual 0x09 – trigger pulse delayed 0x0A – camera ready 0x0B – pulse generator 0x0C – strobe #1 0x0D – strobe #2 0x0E – toggle OUT 1 0x0F – frame transfer pulse N/A	RW	Maps various internal signals to OUT 1 or OUT2 camera output.
0x055C	Strobe #1 Select	Data (1:0) Data (31:2)	0x0 – disable Strobe #1 0x1 – enable Strobe #1 each frame 0x2 – enable Strobe #1 odd frames only 0x3 – enable Strobe #1 even frames only N/A	RW	Sets Strobe #1 mode of operation.
0x0568	Strobe #1 Position	Data (23:0) Data (31:24)	<value> – strobe #1 pulse positions in microseconds N/A	RW	Sets strobe #1 pulse position with respect to end of frame.
0x0564	Strobe #1 Duration	Data (23:0) Data (31:24)	<value> – strobe #1 pulse duration in microseconds N/A	RW	Sets strobe #1 duration in microseconds.
0x0560	Strobe #2 Select	Data (1:0) Data (31:2)	0x0 – disable Strobe #2 0x1 – enable Strobe #2 each frame 0x2 – enable Strobe #2 odd frames only 0x3 – enable Strobe #2 even frames only N/A	RW	Sets Strobe #2 mode of operation.
0x056C	Strobe #2 Position	Data (23:0) Data (31:24)	<value> – strobe #2 pulse positions in microseconds N/A	RW	Sets strobe #2 position with respect to end of frame.
0x05B4	Strobe #2 Duration	Data (23:0) Data (31:24)	<value> – strobe #2 pulse duration in microseconds N/A	RW	Sets strobe #2 duration in microseconds.

Output Data Format

Address	Register Name	Data		Type	Description
0x0100	Bit Depth Selector	Data (1:0)	0x0 – 8-bit 0x1 – 10-bit 0x2 – 12-bit 0x3 – reserved	RW	Selects bit debt output for camera.
		Data (31:2)	N/A		
0x010C	Data Format Selector	Data (2:0)	0x0 – Base 0x1 – Medium 0x2 – Full 0x3 – DECA 0x4 to 0x7 – reserved	RW	Selects tap format for camera data output.
		Data (31:3)	N/A		
0x0104	Bit Shift Selector	Data (3:0)	0x0 – no shift 0x1 – 1 bit left 0x2 – 2 bits left 0x3 – 3 bits left 0x4 – 4 bits left 0x5 – 5 bits left 0x6 – 6 bits left 0x7 – 7 bits left 0x8 – reserved 0x9 – 1 bit right 0xA – 2 bits right 0xB – 3 bits right 0xC – 4 bits right 0xD – 5 bits right 0xE – 6 bits right 0xF – 7 bits right	RW	Selects bit shift steps for camera data output.
		Data (31:4)	N/A		

Color Registers

Address	Register Name	Data		Type	Description
0x0300		Data (0:1)	0x0 – Off 0x1 – WB Once 0x2 – WB Auto Bayer 0x3 – WB Manual 0x4 – WB Once Bayer (Sparse CFA sensor versions only) 0x5 – WB Once Auto (Sparse CFA sensor versions only)	RW	Selects white balance mode – Off, Once, Auto, or Manual.
		Data (31:2)	N/A		
0x0304	WBC Red	Data (0:11)	<value> - WBC Red	RW	Contains white balance correction coefficients for Red.
		Data (31:12)	N/A		

0x0308	WBC Green	Data (0:11) Data (31:12)	<value> - WBC Green N/A	RW	Contains white balance correction coefficients for Green.
0x030C	WBC Blue	Data (0:11) Data (31:12)	<value> - WBC Blue N/A	RW	Contains white balance correction coefficients for Blue.

Data Correction Registers

Address	Register Name	Data		Type	Description
0x011C	LUT Enable	Data (0) Data (31:1)	Off – 000 LUT1 -- 001 LUT2 – 010 LUT3 – 011 LUT4 -- 100 N/A	RW	Enables selected LUT.
0x0124	Bad Pixel Correction Enable	Data (3:0) Data (31:2)	0x0 – BPC disable 0x1 – Static 1 BPC enable 0x2 – Dynamic BPC enable 0x3 – Static 1 & Dynamic BPC enable 0x4 – Static 2 BPC enable 0x5 – Static 2 & Dynamic BPC enable N/A	RW	Enables all Bad Pixels Correction.
0x0198	Dynamic Bad Pixel Correction Threshold Level	Data (0:11) Data (31:12)	<value> - Threshold value N/A	RW	Sets threshold level for dynamic hot pixel correction.
0x0128	FFC Enable	Data (1:0) Data (31:2)	0x0 – FFC disable 0x1 – FFC 1 enable 0x2 – FFC 2 enable N/A	RW	Enables Flat Field Correction(FFC).
0x0190	Vertical Smear Correction	Data (0) Data (31:1)	0x0 – Off 0x1 – On N/A	RW	Enables Vertical Smear Correction.
0x0188	Negative Image	Data (0) Data (31:1)	‘1’ – Negative Image N/A	RW	Enables negative image (FFF => 000).
0x015C	Horizontal Flip	Data (0) Data (31:1)	‘1’ – Horizontal flip N/A	RW	Flips the image Left => Right.