BOBCAT

INTELLIGENT CAMERA SERIES

ICL-B0620

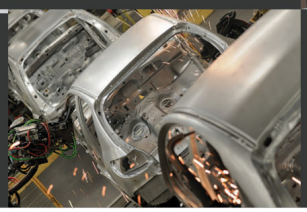

IMPERX ICL-B0620 is an advanced progressive scan, fully programmable CCD camera designed for imaging applications that require high quality images, powerful features and flexibility. The camera is small, light weight, and built around the TRUESENSE Imaging KAI-0340 7.4 micron interline transfer CCD image sensor with a 1/3” optical format.

IMPERX ICL-B0620 provides an image resolution of 648 x 488 and delivers up to 260 frames per second at full resolution. The camera’s 14 bit internal data image processing engine is based on an industrial grade high-speed, high-density FPGA, enabling a broad standard feature set and easy implementation of demanding custom imaging solutions. The thermally optimized, mechanical and electrical design plus the extended operating temperature range (-40°C to +85°C), and high MTBF of 660,000 hours @ 40C, make this Camera Link® camera a perfect fit for the most demanding industrial, medical, scientific and military applications. This camera is also available with CoaXPress or GigE Vision® interfaces.

Features

648/640 x 488/480
Mono or color 8, 10, 12, bit single or dual output (14 bit is single only)
Normal and over-clock operation (210/260 fps)
Base CameraLink, PoCL support
RS232 serial communication
Analog and digital gain and offset control
1x, 2x, 3x, 4x, 8x horizontal and vertical binning
Eight (8) independent horizontal and vertical AOIs
Programmable horizontal and vertical resolution
Programmable line time, frame time and speed
Programmable external trigger
Internal/External exposure control
Standard, fast, frame accumulation, double and asynchronous triggering modes
Automatic gain, exposure and iris control
Automatic white balance
Internal/External H and V sync input/output
Left/right digital bit shift
Test image with image superimposition
Built in pulse generator
Programmable I/O mapping
Dynamic transfer function correction
Dynamic black level correction
Defective and hot pixel correction (static/dynamic)
Temperature monitor
Field upgradeable firmware
Customer defined Look Up Table (LUT)
Reverse image (H mirror)
MTBF of 660,000 hours @ 40°C

APPLICATIONS
Aerial Mapping
Aerial Robots: Military, Police
Aerospace
Agriculture
Automation
Automotive
Biometrics
Broadcasting
Printed Circuit Board (PCB)
Electronics
Energy/Solar/Wind Power
Flat Panel Inspection
Food/Beverage
Homeland Security
Law Enforcement
Intelligent Traffic Systems (ITS)
Medical Devices/Imaging
Metrology
Microscopy
Military/Defense
Pharmaceuticals
Particle Image Velocimetry (PIV)
Radiology
Robotics
Scientific Apps
Surveillance
Semiconductors
Transportation
Textile/Apparel

IMPERX

BOBCAT ICL-B0620 Specifications

Maximum Resolution	648 x 488
Sensor Type	KAI-0340, CCD, 1/3” optical format
Pixel Size	7.40 µm
Frame Rate	208/260 fps (normal/overclock)
Max Frame Rate	2164 FPS
Minimum S/N ratio	60 db
Video Output	Base Camera Link, mini CL interface, PoCL
Output Format	Mono or color 8, 10, 12, bit single or dual output (14 bit is single only)
Binning H & V	x1, x2, x3, x4, x8
Area of Interest	8 independent AOIs, 2 x 2 to 648 x 488
Shutter Speed	1/500,000 to 1/110 sec (nom)
Long Integration	Up to 16 sec
Gamma Correction	G=1.0, G= 0.45, user upgradable LUT
Video Gain	36 dB range, 1024 steps, 0.0351 dB per step
Exposure and AGC	Manual, Auto, Programmable
Iris Control	Auto, Programmable
Strobe Output	Programmable position and duration
Image Overlay	Yes, Programmable
RS232 Interface	Yes

Data Corrections	DPC, HPC, LUT
Hardware Trigger	LVTTL or TTL via IN1/IN2, level, edge, pulse-width, programmable
Software Trigger	Frame grabber via CC1/CC2, level, edge, pulse-width, programmable
Trigger Modes	Programmable, standard, double exposure, fast, frame accumulation, asynchronous
Min. Illumination	1 Lux, F/1.4
Supply Input Range	12 VDC, (10V min, 15V max)
Power Consumption	2.7 W, 230 mA steady, 1.5 A inrush
Size (W x H x L)	46 x 46 x 39mm
Weight	137g
Lens Mount	C-Mount
Vibration, Shock	10G (20 - 200) Hz XYZ, 70G
Environmental	Operation (-40° to +85°)C Storage (-40° to +90°)C
Humidity	10% to 90% non-condensing
MTBF	660,000 hours @ 40°C
Regulatory	FCC 15 part A, CE, RoHS

Power and I/O Interface:

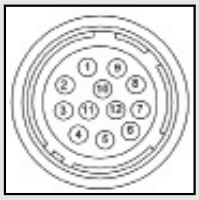

1	12V DC Return	7	OUT1 Signal
2	+12V DC	8	IN1 Signal
3	IRIS VCC	9	IN2 Signal
4	IRIS Video	10	IN1/2 Return
5	IRIS Return	11	Reserved
6	OUT1/2 Return	12	OUT2 Signal

Connector: Hirose HR 10A-10R-12PB(71)

Order Options:

ICL-B0620M-TCO Monochrome Camera Link Output
ICL-B0620C-TCO Color Camera Link Output

For specific details and ordering information, consult the camera user’s manual or contact IMPERX at sales@imperx.com.

Accessories:

PS12V04: Power Supply (sold separately)

Spectral Response

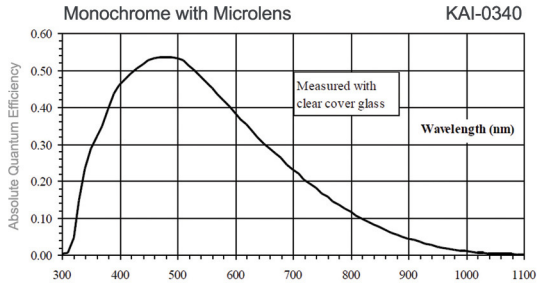

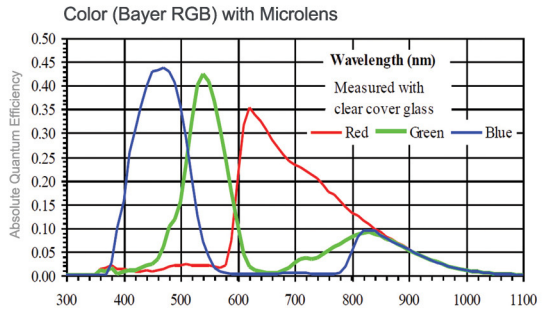

Software/Drivers/Interface

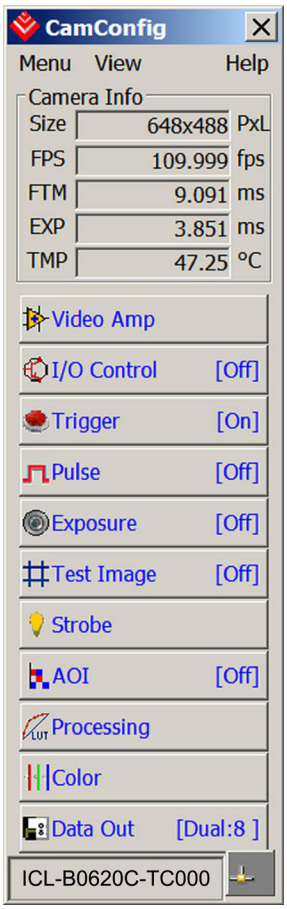

Mechanical Dimensions

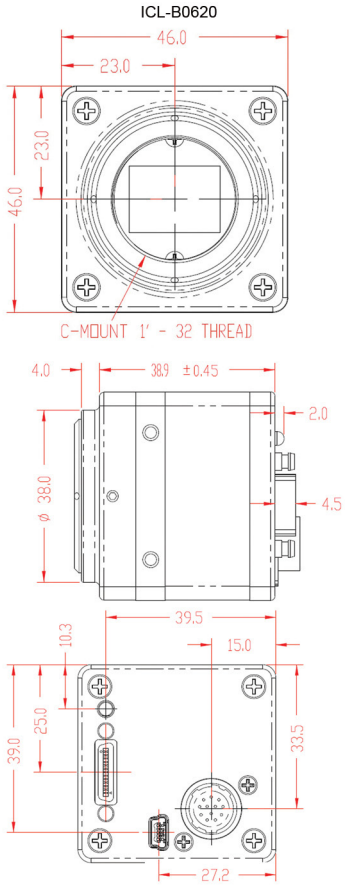

IMPERX | 6421 Congress Avenue | Boca Raton | FL 33487 | USA
Phone: +1-561-989-0006 | 1-866-849-1662 | Fax: +1-561-989-0045
www.imperx.com | sales@imperx.com

Copyright © 2013. IMPERX product information is subject to change without notice.