LYNX
Hardware User's Manual
(CameraLink and GigE models)

HIGH-RESOLUTION, FAST, FIELD UPGRADEABLE, PROGRAMMABLE, 8/10/12 BIT DIGITAL CAMERAS

CONFIDENTIAL NOTICE:

These products are not intended for use in life support appliances, devices, or systems where malfunction of these products can reasonably be expected to result in personal injury. Imperx customers using or selling these products for use in such applications do so at their own risk and agree to fully indemnify Imperx for any damages resulting from such improper use or sale.

Imperx, Inc.
6421 Congress Ave.
Boca Raton, FL 33487
+1 (561) 989-0006

Rev. 10
1/10/2008

Revision History

Rev. 1	12/15/05	P. Dinev	Initial release.
Rev. 2	1/04/06	G. Angelone	Modify driver installation to select Pro1000.inf
Rev. 3	1/23/06	J. Egri	Updated Appendix B - LynxTerminal to reflect the addition of GigE support.
Rev. 4	2/28/06	J. Egri	Added illustrations of the External Trigger input and Strobe output circuits for GigE camera. Added note about Escape Markers to section 3.3 Added new features and commands for: Defective Pixel Correction, Flat Field Correction and Programmable Frame Time. Updated Chapter 4 - LynxConfigurator Updated Appendix B - LynxTerminal
Rev. 5	3/16/06	J. Egri	Updated section 2.2.2 - 'Calculating the Frame Rate using Vertical Window' for the IPX-11M5 camera
Rev. 6	5/04/06	J. Egri	Added support for 2M30, 2M30H and 4M15 to Flat Field Correction. Changed description of Section 2.10 – Dynamic Signal-to-Noise Correction. Removed GigE application GUI description in section 5.3. A detailed description of the GUI can be found in the LYNX Software User's Manual.
Rev. 7	07/21/06	J. Egri	Updated sections 3.8.6 and 3.8.7 - added third parameter to 'sag' and 'sao' commands. Fixed Strobe Position text in section 3.8.5.1
Rev. 8	03/09/07	J. Egri	Added support for IPX-16M3 camera Corrected timing diagrams figures 2.15 and 2.25 Added programmable STROBE to figures 2.42 – 2.44
Rev. 9	03/20/07	J. Egri	Corrected text for SVM command in 3.8.13.1 Added figures 1.9 and 1.16 for the Peltier cameras IPX-4M15T / 11M5T / 16M3T Added TEC description in section 2.18
Rev. 10	01/10/08	B. Rink	Added Appendix F – Lynx TEC Operating Manual

Table of Contents

List of Figures

List of Tables

Chapter 1

Introduction

This chapter outlines the key features of the Lynx camera.

1.1 LYNX FAMILY

The LYNX series of cameras are built around a robust imaging platform utilizing the latest digital technology. The camera's image processing engine is based on a 1 million gate FPGA and a 32-bit RISC processor.

The LYNX-CL family consists of the following 22 cameras with camera link output

Camera Link High Speed:

OEM ONLY	IPX-VGA120-L	640x480	110fps	monochrome
OEM ONLY	IPX-VGA120-LC	640x480	110fps	color
	IPX-VGA210-L	640x480	210fps	monochrome
	IPX-VGA210-LC	640x480	210fps	color

Camera Link Mega-pixel:

IPX-1M48-L	1000x1000	48fps	monochrome
IPX-1M48-LC	1000x1000	48fps	color
IPX-2M30-L	1600x1200	33fps	monochrome
IPX-2M30-LC	1600x1200	33fps	color
IPX-2M30H-L	1920x1080	32fps	monochrome
IPX-2M30H-LC	1920x1080	32fps	color
IPX-4M15-L	2048x2048	15fps	monochrome
IPX-4M15-LC	2048x2048	15fps	color
IPX-4M15T-L	2048x2048	15fps	monochrome, Peltier cooled
IPX-4M15T-LC	2048x2048	15fps	color, Peltier cooled
IPX-11M5-L	4000x2672	5fps	monochrome
IPX-11M5-LC	4000x2672	5fps	color
IPX-11M5T-L	4000x2672	5fps	monochrome, Peltier cooled
IPX-11M5T-LC	4000x2672	5fps	color, Peltier cooled
IPX-16M3-L	4872x3248	3fps	monochrome
IPX-16M3-LC	4872x3248	3fps	color
IPX-16M3T-L	4872x3248	3fps	monochrome, Peltier cooled
IPX-16M3T-LC	4872x3248	3fps	color, Peltier cooled

The LYNX-GigE family consists of the following 20 cameras with GigE output:

GigE High Speed:

IPX-VGA210-G	640x480	210fps	monochrome
IPX-VGA210-GC	640x480	210fps	color

GigE Mega-pixel:

IPX-1M48-G	1000x1000	48fps	monochrome
IPX-1M48-GC	1000x1000	48fps	color
IPX-2M30-G	1600x1200	33fps	monochrome
IPX-2M30-GC	1600x1200	33fps	color
IPX-2M30H-G	1920x1080	32fps	monochrome
IPX-2M30H-GC	1920x1080	32fps	color
IPX-4M15-G	2048x2048	15fps	monochrome
IPX-4M15-GC	2048x2048	15fps	color
IPX-4M15T-G	2048x2048	15fps	monochrome, Peltier cooled
IPX-4M15T-GC	2048x2048	15fps	color, Peltier cooled
IPX-11M5-G	4000x2672	5fps	monochrome
IPX-11M5-GC	4000x2672	5fps	color
IPX-11M5T-G	4000x2672	5fps	monochrome, Peltier cooled
IPX-11M5T-GC	4000x2672	5fps	color, Peltier cooled
IPX-16M3-G	4872x3248	3fps	monochrome
IPX-16M3-GC	4872x3248	3fps	color
IPX-16M3T-G	4872x3248	3fps	monochrome, Peltier cooled
IPX-16M3T-GC	4872x3248	3fps	color, Peltier cooled

1.2 GENERAL DESCRIPTION

The LYNX cameras are advanced, high-resolution, progressive scan, fully programmable and field upgradeable CCD cameras. They are built around KODAK's line of interline transfer CCD imagers. The camera's image processing engine is based on a 1 million gate FPGA and 32-bit RISC processor. The LYNX cameras feature programmable image resolution, frame rates, gain, offset, asynchronous external triggering with programmable exposure, fast triggering, double exposure and capture duration, electronic shutter, long time integration, strobe output, transfer function correction, temperature monitoring and user programmable and up-loadable LUT. A square imager format with uniform 7.4 µm square pixels provides for a superior image in any orientation. The interline transfer CCD permits full vertical and horizontal resolution of high-speed shutter images. The combination of electronic shutter and long time integration enables the cameras capturing speed to be from 1/200,000 second to more than 10 seconds. A built-in Gamma correction and user LUT optimizes the CCD 's dynamic range. The cameras have a standard GigE or Camera Link™ interface that includes 8/10/12 bits data transmission with one or two output taps as well as camera control and asynchronous RS232 serial communication interface, all on a single cable. The cameras are fully programmable via the serial interface using a GUI based configuration utility, or optionally, the camera can be configured using simple ASCII commands via any terminal emulator. The adaptability and flexibility of the camera allows it to be used in a wide and diverse range of applications including machine vision, metrology high-definition imaging and surveillance, medical and scientific imaging, intelligent transportation systems, character recognition, document processing and many more.

MAIN LYNX FEATURES

- Interline transfer CCD
- Progressive scan image
- 8/10/12 bit data,
- Base Camera Link or GigE output
- Single or Dual tap operation
- RS232 serial communication
- 32 bit RISC processor
- Horizontal and vertical binning
- Dynamic transfer function correction
- Dynamic S/N correction
- Defective Pixel Correction
- Flat Field Correction
- Temperature monitor
- Field upgradeable:
    - Software
    - Firmware
    - User LUTs

  - Defective Pixel Map
  - Flat Field Coefficients

- Highly programmable:
  - Resolution
  - Frame rate
  - Electronic shutter
  - Long integration
  - Strobe output
  - Analog gain
  - Analog offset
  - Area of interest
  - User LUT
  - Temperature alarms
  - External trigger
  - Pre-exposure
  - Fast triggering
  - Double exposure
  - Capture duration

- Automatic Iris Control – optional
- Peltier Cooled version available for:
  - IPX-4M15T
  - IPX-11M5T
  - IPX-16M3T

1.3 LYNX TECHNICAL SPECIFICATIONS

A CCD camera is an electronic device for converting light into an electrical signal. The camera contains a light sensitive element CCD (Charge Coupled Device) where an electronic representation of the image is formed. The CCD consists of a two dimensional array of sensitive elements – silicon photodiodes, also known as pixels. The photons falling on the CCD surface create photoelectrons within the pixels, where the number of photoelectrons is linearly proportional to the light level. Although the number of electrons collected in each pixel is linearly proportional to the light level and exposure time, the amount of electrons varies with the wavelength of the incident light. When the desired exposure is reached, the charges from each pixel are shifted onto a vertical register, VCCD, and then one row downwards in a vertical direction towards a horizontal register, HCCD. After that the electrons contained in the HCCD are shifted in a horizontal direction, one pixel at a time, onto a floating diffusion output node where the transformation from charge to voltage takes place. The resultant voltage signal is buffered by a video amplifier and sent to the corresponding video output. There are two floating diffusions and two video amplifiers at each end of the HCCD, and the charges can be transferred towards any of the outputs (depending on the mode of operation). The time interval required for all the pixels, from the entire imager, to be clocked out of the HCCD is called a frame. To generate a color image a set of color filters (Red, Green, Blue) arranged in a "Bayer" pattern, are placed over the pixels. The starting color is Green. Figure 1.1 shows the CCD pixel structure. Table 1.1 shows the individual pixel structure for different LYNX cameras. Figures 1.2, 1.3 and 1.4 show the camera's spectral response.

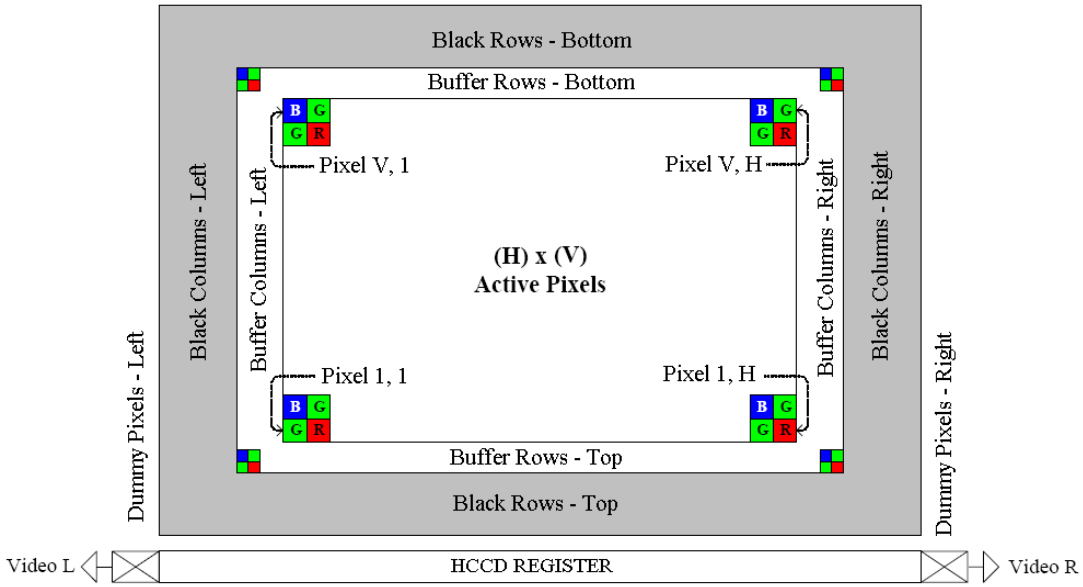

Figure 1.0 - CCD Pixel Structure

Features	IPX-VGA210-L/G	IPX-1M48-L/G	IPX-2M30-L/G	IPX-2M30H-L/G	IPX-4M15-L/G	IPX-11M5-L/G	IPX-16M3-L/G
CCD sensor	KAI-0340S/D	KAI-1020	KAI-2020	KAI-2093	KAI-4021	KAI-11002	KAI-16000
Pixel size	7.4 µm	7.4 µm	7.4 µm	7.4 µm	7.4 µm	9.0 µm	7.4 µm
Black rows - top	4	4	2	4	10	16	4
Buffer rows - top	4	2	4	2	6	8	16
Active rows - (V)	**480**	**1000**	**1200**	**1080**	**2048**	**2672**	**3248**
Buffer rows - bottom	4	2	4	2	8	8	16
Black rows - bottom	0	0	4	4	0	16	40
Dummy pixels - left	12	8	4	4	12	4	13
Black columns - left	24	12	16	28	28	20	28
Buffer columns - left	4	2	4	4	4	16	16
Active pixels - (H)	**640**	**1000**	**1600**	**1920**	**2048**	**4000**	**4872**
Buffer columns - right	4	2	4	4	4	16	16
Black columns - right	24	12	16	28	28	20	28
Dummy pixels - right	12	8	4	4	12	4	13
Frame rate - single	110 fps	30 fps	17 fps	16 fps	7.5 fps	2.5 fps	1.5 fps
Frame rate - dual	210 fps	48 fps	33 fps	32 fps	15 fps	5 fps	3 fps

Table 1.0 - Pixel structure for different LYNX cameras.

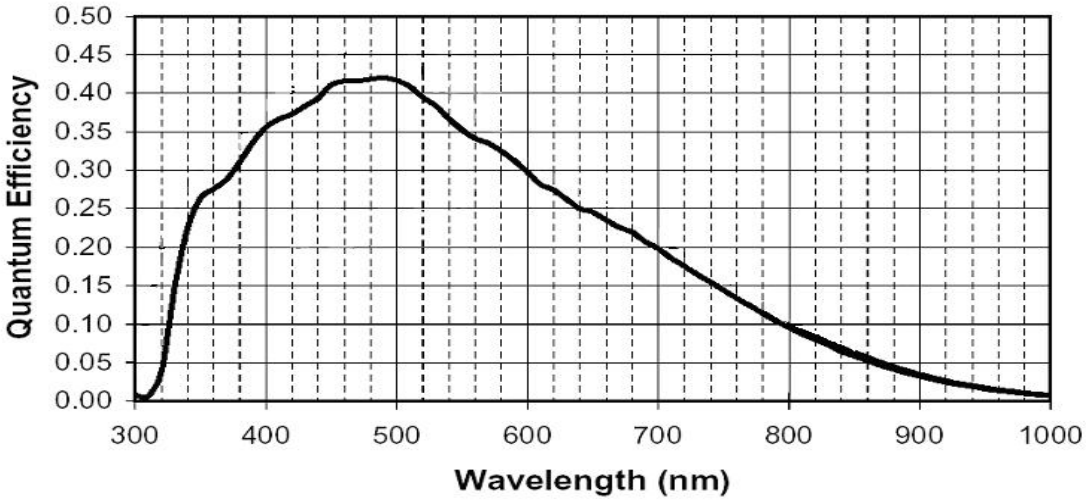

Figure 1.1 - Spectral response – monochrome quantum efficiency
(Measured with the cover glass)

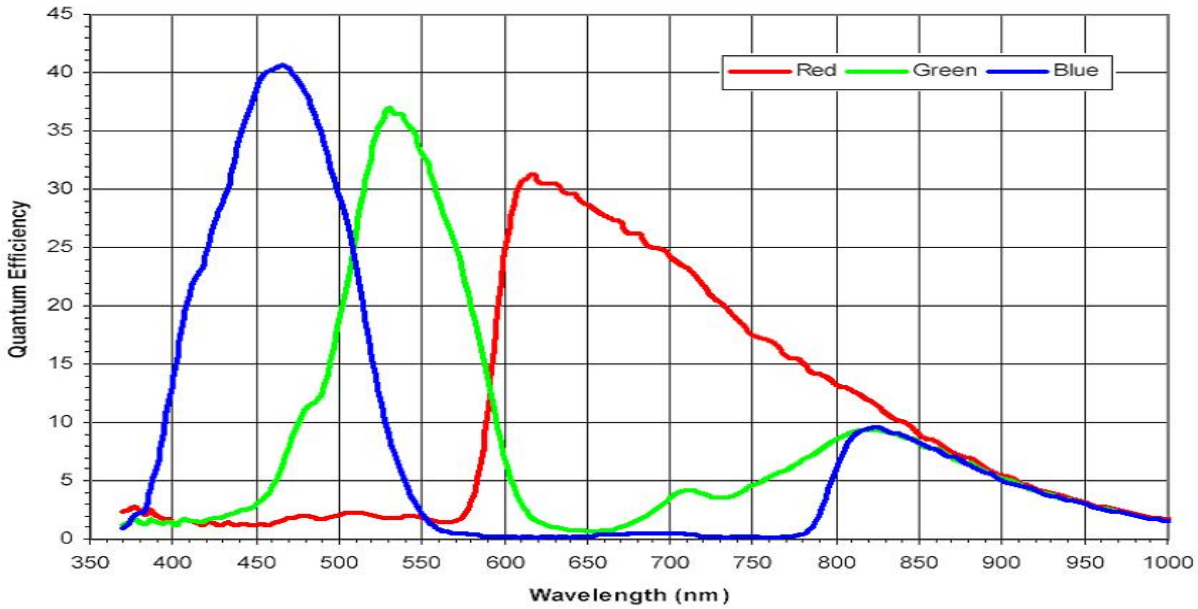

Figure 1.2 - Spectral response – color quantum efficiency
(Measured with the cover glass)

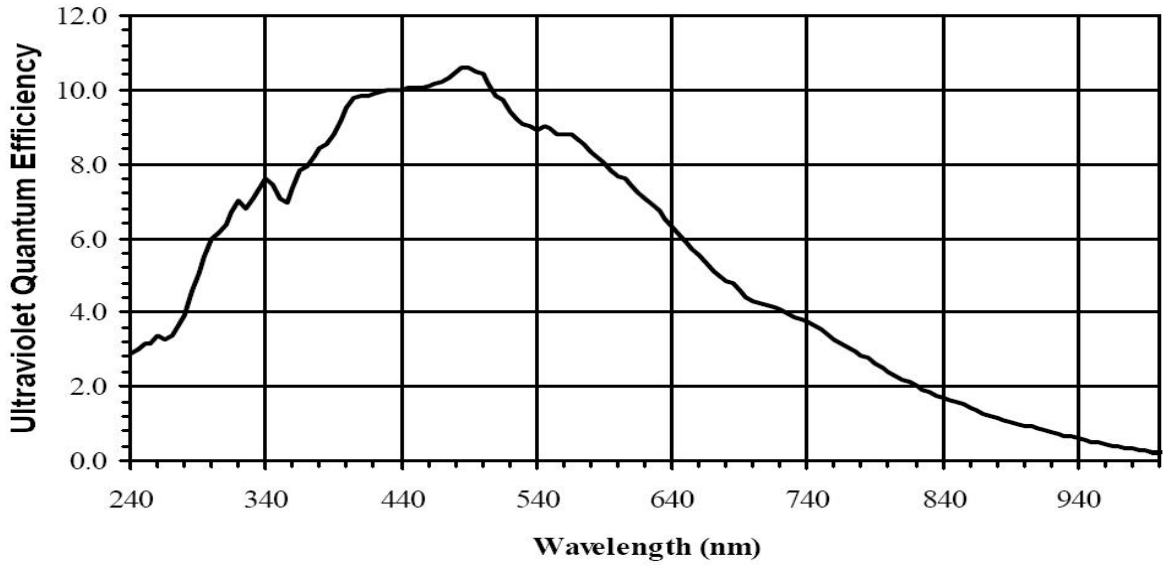

Figure 1.3 - Spectral response – UV quantum efficiency
(Measured without the cover glass)

Specifications	IPX-VGA120-L	IPX-VGA210-L/G
Active image pixels	640 (H) x 480 (V)	640 (H) x 480 (V)
Active image area	4.74 mm x 3.55 mm	4.74 mm x 3.55 mm
Pixel size	7.4 µm	7.4 µm
Video output	Digital, 8/10/12 bit, one output	Digital, 8/10/12 bit, one or two outputs
Tap reordering	Yes	Yes
Data clock	40.000 MHz	40.000 MHz
Camera interface	Base Camera Link	Base Camera Link/GigE
RS 232 interface	Yes	Yes
Resolution	640 x 480 pixels	640 x 480 pixels
Nominal frame rate	110 fps	210 fps
Maximum frame rate	up to 900 fps	up to 3000 fps
S/N ratio	60 dB	60 dB
Binning	1 x 1, 2 x 2	1 x 1, 2 x 2
Area of interest	2 x 2 pixels min. size	2 x 2 pixels min. size
Mirror image	Yes	Yes
Negative image	Yes	Yes
Test image	Yes	Yes
Shutter speed	1/100000 to 1/100 sec	1/100000 to 1/100 sec
Long integration	Up to 10 sec	Up to 10 sec
Gamma correction	G=1.0, G=0.45, user LUT	G=1.0, G=0.45, user LUT
Black level offset	256 levels per output	256 levels per output
Video gain	6 to 40 dB per output	6 to 40 dB per output
Gain resolution	0.035 dB/step, 1024 steps	0.035 dB/step, 1024 steps
Hardware trigger	Asynchronous, **a**ctive HIGH, optically isolated	Asynchronous, **a**ctive HIGH, optically isolated
Software trigger	Asynchronous, frame-grabber via CC1	Asynchronous, frame-grabber via CC1
Trigger modes	Normal, double exposure, fast triggering	Normal, double exposure, fast triggering
Strobe output	Active HIGH	Active HIGH
Camera housing	Solid, anodized aluminum	Solid, anodized aluminum
Size (W x H x L) mm	67 x 67 x 41	67 x 67 x 41 - CL 78 x 78 x 54 - GigE
Weight	280 g	280/450 g
Min. illumination	1.0 Lux, f=1.4	1.0 Lux, f=1.4
Lens Mount	C mount, 1/3" format	C mount, 1/3" format
Power input range	10 V to 15 V DC	10 V to 15 V DC
Power consumption	4.0 W	4.2/6.2 W
Upgradeable firmware	Yes	Yes
Upgradeable software	Yes	Yes
Environmental	Operating: -5 to 50 C Storage: -10 to 65 C	Operating: -5 to 50 C Storage: -10 to 65 C
Relative humidity	80% non-condensing	80% non-condensing

Table 1.1 - Camera Specifications

Specifications	IPX-1M48-L/G	IPX-2M30-L/G	IPX-2M30H-L/G
Active image pixels	1000 (H) x 1000 (V)	1600 (H) x 1200 (V)	1920 (H) x 1080 (V)
Active image area	7.40 mm x 7.40 mm	11.84 mm x 8.88 mm	14.21 mm x 7.99 mm
Pixel size	7.4 µm	7.4 µm	7.4 µm
Video output	Digital, 8/10/12 bit, one or two outputs	Digital, 8/10/12 bit, one or two outputs	Digital, 8/10/12 bit, one or two outputs
Tap reordering	Yes	Yes	Yes
Data clock	40.000 MHz	40.000 MHz	40.000 MHz
Camera interface	Base Camera Link/GigE	Base Camera Link/GigE	Base Camera Link/GigE
RS 232 interface	Yes	Yes	Yes
Resolution	1000 x 1000 pixels	1600 x 1200 pixels	1920 x 1080 pixels
Nominal frame rate	48 fps	33 fps	33 fps
Maximum frame rate	up to 140 fps	up to 60 fps	up to 200 fps
S/N ratio	60 dB	60 dB	60 dB
Binning	1 x 1, 2 x 2	1 x 1, 2 x 2	1 x 1, 2 x 2
Area of interest	2 x 2 pixels min. size	2 x 2 pixels min. size	2 x 2 pixels min. size
Mirror image	Yes	Yes	Yes
Negative image	Yes	Yes	Yes
Test image	Yes	Yes	Yes
Shutter speed	1/50000 to 1/30 sec	1/40000 to 1/15 sec	1/35000 to 1/15 sec
Long integration	Up to 10 sec	Up to 10 sec	Up to 10 sec
Gamma correction	G=1.0, G=0.45, user LUT	G=1.0, G=0.45, user LUT	G=1.0, G=0.45, user LUT
Black level offset	256 levels per output	256 levels per output	256 levels per output
Video gain	0 to 36 dB per output	6 to 40 dB per output	6 to 40 dB per output
Gain resolution	0.035 dB/step, 1024 steps	0.035 dB/step, 1024 steps	0.035 dB/step, 1024 steps
Hardware trigger	Asynchronous, active HIGH, optically isolated	Asynchronous, active HIGH, optically isolated	Asynchronous, active HIGH, optically isolated
Software trigger	Asynchronous, frame-grabber via CC1	Asynchronous, frame-grabber via CC1	Asynchronous, frame-grabber via CC1
Trigger modes	Normal, double exposure, fast triggering	Normal, double exposure, fast triggering	Normal, double exposure, fast triggering
Strobe output	Active HIGH	Active HIGH	Active HIGH
Camera housing	Solid, anodized aluminum	Solid, anodized aluminum	Solid, anodized aluminum
Size (W x H x L)	67 x 67 x 41 - CL 78 x 78 x 54 - GigE	67 x 67 x 47 - CL 78 x 78 x 60 - GigE	67 x 67 x 47 - CL 78 x 78 x 60 - GigE
Weight	280/450 g	310/490 g	310/490 g
Min. illumination	1.0 Lux, f=1.4	1.0 Lux, f=1.4	1.0 Lux, f=1.4
Lens Mount	C mount, 2/3" format	C mount, 1" format	C mount, 1" format
Power input range	10 V to 15 V DC	10 V to 15 V DC	10 V to 15 V DC
Power consumption	3.6/6.6 W	4.8/6.8 W	4.8/6.8 W
Upgradeable firmware	Yes	Yes	Yes
Upgradeable software	Yes	Yes	Yes
Environmental	Operating: -5 to 50 C Storage: -10 to 65 C	Operating: -5 to 50 C Storage: -10 to 65 C	Operating: -5 to 50 C Storage: -10 to 65 C
Relative humidity	80% non-condensing	80% non-condensing	80% non-condensing

Table 1.1 - Camera Specifications (cont.)

Specifications	IPX-4M15-L/G	IPX-11M5-L/G	IPX-16M3-L/G
Active image pixels	2048 (H) x 2048 (V)	4000 (H) x 2672 (V)	4872 (H) x 3248 (V)
Active image area	15.16 mm x 15.16 mm	36.05 mm x 24.05 mm	36.05 mm x 24.05 mm
Pixel size	7.4 µm	9.0 µm	7.4 µm
Video output	Digital, 8/10/12 bit, one or two outputs	Digital, 8/10/12 bit, one or two outputs	Digital, 8/10/12 bit, one or two outputs
Tap reordering	Yes	Yes	Yes
Data clock	40.000 MHz	28.000 MHz	28.000 MHz
Camera interface	Base Camera Link/GigE	Base Camera Link/GigE	Base Camera Link/GigE
RS 232 interface	Yes	Yes	Yes
Resolution	2048 x 2048 pixels	4000 x 2672 pixels	4872 x 3248 pixels
Nominal frame rate	15 fps	5 fps	3 fps
Maximum frame rate	up to 115 fps	up to 49 fps	up to 29 fps
S/N ratio IPX/TEC	60/66 dB	60/66 dB	60/66 dB
Binning	1 x 1, 2 x 2	1 x 1, 2 x 2	1 x 1, 2 x 2
Area of interest	2 x 2 pixels min. size	2 x 200 pixels min. size	2 x 200 pixels min. size
Mirror image	Yes	Yes	Yes
Negative image	Yes	Yes	Yes
Test image	Yes	Yes	Yes
Shutter speed	1/30000 sec to 1/7 sec	1/10000 sec to 1/3 sec	1/1700 sec to 1/1.5 sec
Long integration	Up to 10 sec	Up to 10 sec	Up to 10 sec
Gamma correction	G=1.0, G=0.45, user LUT	G=1.0, G=0.45, user LUT	G=1.0, G=0.45, user LUT
Black level offset	256 levels per output	256 levels per output	256 levels per output
Video gain	6 to 40 dB per output	6 to 40 dB per output	6 to 40 dB per output
Gain resolution	0.035 dB/step, 1024 steps	0.035 dB/step, 1024 steps	0.035 dB/step, 1024 steps
Hardware trigger	Asynchronous, **a**ctive HIGH, optically isolated	Asynchronous, **a**ctive HIGH, optically isolated	Asynchronous, **a**ctive HIGH, optically isolated
Software trigger	Asynchronous, frame-grabber via CC1	Asynchronous, frame-grabber via CC1	Asynchronous, frame-grabber via CC1
Trigger modes	Normal, double exposure, fast triggering	Normal, double exposure, fast triggering	Normal, double exposure, fast triggering
Strobe output	Active HIGH	Active HIGH	Active HIGH
TEC Versions	Single Stage Peltier Cooler	Single Stage Peltier Cooler	Single Stage Peltier Cooler
Camera housing	Solid, anodized aluminum	Solid, anodized aluminum	Solid, anodized aluminum
Size IPX-CL (W x H x L)	67 x 67 x 47 - CL	67 x 67 x 47 - CL	67 x 67 x 47 - CL
Size IPX-G (W x H x L)	78 x 78 x 60 - GigE	78 x 78 x 70 - GigE	78 x 78 x 70 - GigE
Size TEC (W x H x L)	100 x 100 x 100 - TEC	100 x 100 x 100 - TEC	100 x 100 x 100 - TEC
Weight CL/GigE/TEC	360/520/1300 g	390/640/1350 g	470/640/1350 g
Min. illumination	1.0 Lux, f=1.4	1.0 Lux, f=1.4	1.0 Lux, f=1.4
Lens Mount	F mount, 22mm format	F mount, 43mm format	F mount, 43mm format
Power input range	10 V to 15 V DC	10 V to 15 V DC	10 V to 15 V DC
Power consumption	5.2/7.2/10.0 W	6.0/8.0/10.0 W	6.0/8.0/10.0 W
Field Upgradeable	Yes	Yes	Yes
Environmental	Operating: -5 to 50 C Storage: -10 to 65 C	Operating: -5 to 50 C Storage: -10 to 65 C	Operating: -5 to 50 C Storage: -10 to 65 C
Relative humidity	80% non-condensing	80% non-condensing	80% non-condensing

Table 1.1 - Camera Specifications (cont.)

1.4 CAMERA CONNECTIVITY

1.4.1 Camera Link Output

The interface between the LYNX-CL camera and outside equipment is done via two connectors and one LED, located on the back panel of the camera – Figure 1.4.

1. Camera output – standard base Camera Link provides data, sync, control, and serial interface.
2. 10-pin Power Connector – provides power and I/O interface.
3. Status LED – indicates the status of the camera – refer to Status LED section.
4. Serial Number – shows camera model and serial number.

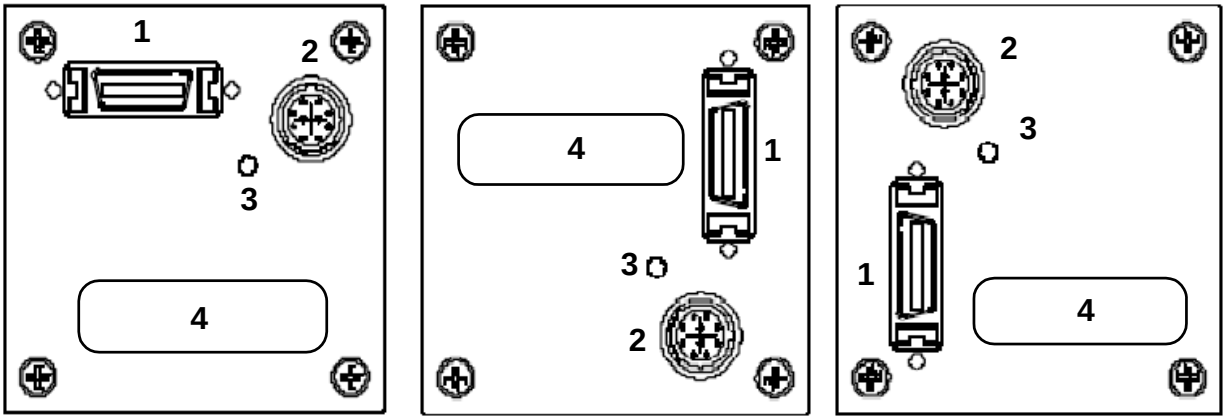

IPX-VGA / 2M30 / 2M30H-L **IPX-1M48-L** **IPX-4M15-L**
IPX-11M5 / 16M3-L

Figure 1.4 - Camera Back Panel – Camera Link Output

Camera data output is compliant with base Camera Link standard and includes 24 data bits, 3 sync signals (LVAL, FVAL and DVAL), 1 reference clock, 1 external input trigger CC1 and a bi-directional serial interface. The camera link output connector is shown in Figure 1.5a, and the corresponding signal mapping in Table 1.2.

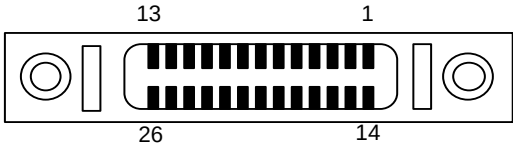

Figure 1.5a - Camera Output Connector

Cable Name	Pin	CL Signal	Type	Description
Inner Shield	1	Inner Shield	Ground	Cable Shield
Inner Shield	14	Inner Shield	Ground	Cable Shield
- PAIR 1	2	- X 0	LVDS - Out	Camera Link Channel Tx
+ PAIR 1	15	+ X 0	LVDS - Out	Camera Link Channel Tx
- PAIR 2	3	- X 1	LVDS - Out	Camera Link Channel Tx
+ PAIR 2	16	+ X 1	LVDS - Out	Camera Link Channel Tx
- PAIR 3	4	- X 2	LVDS - Out	Camera Link Channel Tx
+ PAIR 3	17	+ X 2	LVDS - Out	Camera Link Channel Tx
- PAIR 4	5	- X CLK	LVDS - Out	Camera Link Clock Tx
+ PAIR 4	18	+ X CLK	LVDS - Out	Camera Link Clock Tx
- PAIR 5	6	- X 3	LVDS - Out	Camera Link Channel Tx
+ PAIR 5	19	+ X 3	LVDS - Out	Camera Link Channel Tx
+ PAIR 6	7	+ SerTC	LVDS - In	Serial Data Receiver
- PAIR 6	20	- SerTC	LVDS - In	Serial Data Receiver
- PAIR 7	8	- SerTFG	LVDS - Out	Serial Data Transmitter
+ PAIR 7	21	+ SerTFG	LVDS - Out	Serial Data Transmitter
- PAIR 8	9	- CC 1	LVDS - In	Software External Trigger
+ PAIR 8	22	+ CC 1	LVDS - In	Software External Trigger
+ PAIR 9	10	N/C	N/C	N/C
- PAIR 9	23	N/C	N/C	N/C
- PAIR 10	11	N/C	N/C	N/C
+ PAIR 10	24	N/C	N/C	N/C
+ PAIR 11	12	N/C	N/C	N/C
- PAIR 11	25	N/C	N/C	N/C
Inner Shield	13	Inner Shield	Ground	Cable Shield
Inner Shield	26	Inner Shield	Ground	Cable Shield

Table 1.2 - Camera Output Connector – Signal Mapping

The bit assignment corresponding to the base configuration is shown in the following table.

Port	Port/bit	8-bits Tap 1, 2	10-bits Tap1, 2	12-bits Tap 1, 2
DATA 0	Port A0	A0	A0	A0
DATA 1	Port A1	A1	A1	A1
DATA 2	Port A2	A2	A2	A2
DATA 3	Port A3	A3	A3	A3
DATA 4	Port A4	A4	A4	A4
DATA 5	Port A5	A5	A5	A5
DATA 6	Port A6	A6	A6	A6
DATA 7	Port A7	A7	A7	A7
DATA 8	Port B0	B0	A8	A8
DATA 9	Port B1	B1	A9	A9
DATA 10	Port B2	B2	N/C	A10
DATA 11	Port B3	B3	N/C	A11
DATA 12	Port B4	B4	B8	B8
DATA 13	Port B5	B5	B9	B9
DATA 14	Port B6	B6	N/C	B10
DATA 15	Port B7	B7	N/C	B11
DATA 16	Port C0	N/C	B0	B0
DATA 17	Port C1	N/C	B1	B1
DATA 18	Port C2	N/C	B2	B2
DATA 19	Port C3	N/C	B3	B3
DATA 20	Port C4	N/C	B4	B4
DATA 21	Port C5	N/C	B5	B5
DATA 22	Port C6	N/C	B6	B6
DATA 23	Port C7	N/C	B7	B7
ENABLE 0	LVAL	LVAL	LVAL	LVAL
ENABLE 1	FVAL	FVAL	FVAL	FVAL
ENABLE 2	DVAL	DVAL	DVAL	DVAL
ENABLE 3	N/C	N/C	N/C	N/C
CONTROL 0	CC 1	CC 1	CC 1	CC 1
CONTROL 1	N/C	N/C	N/C	N/C
CONTROL 2	N/C	N/C	N/C	N/C
CONTROL 3	N/C	N/C	N/C	N/C

Table 1.3 - Base Camera Link bit assignment

The power and all external input/output signals are supplied to the camera via the camera power connector shown in Figure 1.5b. The corresponding pin mapping is shown in Table 1.4a. The connector is a HIROSE type miniature locking receptacle #HR10A-10R-10PB.

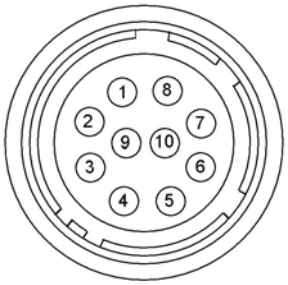

Figure 1.5b - Camera Power Connector – Camera Link Output (viewed from rear)

Pin	Signal	Type	Description
1	Trigger In -	TTL - Input	External Trigger Input
2	Trigger In +	TTL - Input	External Trigger Input
3	GND	Power - Input	Power Ground Return
4	GND	Power - Input	Power Ground Return
5	+ 12 V	Power - Input	+ 12 V Power Supply
6	+ 12 V	Power - Input	+ 12 V Power Supply
7	Strobe Out -	TTL - Output	Strobe Light Sync Pulse
8	Strobe Out +	TTL - Output	Strobe Light Sync Pulse
9	Auto Iris +	Input	Auto Iris Feedback Input
10	Auto Iris -	Output	Auto Iris Control Output

Table 1.4a - Camera Power Connector Pin Mapping – Camera Link Output

The camera is shipped with a power cable which terminates in a HIROSE plug #HR10A-10P-10S, and has two small BNC pig-tail cables for the external trigger input (black) and strobe output (white). The corresponding BNC connector pin mapping is shown on Table 1.4b.

Pin	Signal	Cable color	Description
Shield	Trigger In -	BNC Black	External Trigger Input
Signal	Trigger In +		External Trigger Input
Shield	Strobe Out -	BNC White	Strobe Light Sync Pulse
Signal	Strobe Out +		Strobe Light Sync Pulse

Table 1.4b - BNC Connectors Pin Mapping

1.4.2 GigE Output

The interface between the LYNX-GigE camera and outside equipment is done via two connectors and one LED, located on the back panel of the camera – Figure 1.6a.

1. Camera output – standard RJ-45 provides data, sync, control, and serial interface.
2. 12-pin Power Connector – provides power and I/O interface.
3. Status LED – indicates the status of the camera – refer to Status LED section.
4. Serial Number – shows camera model and serial number.

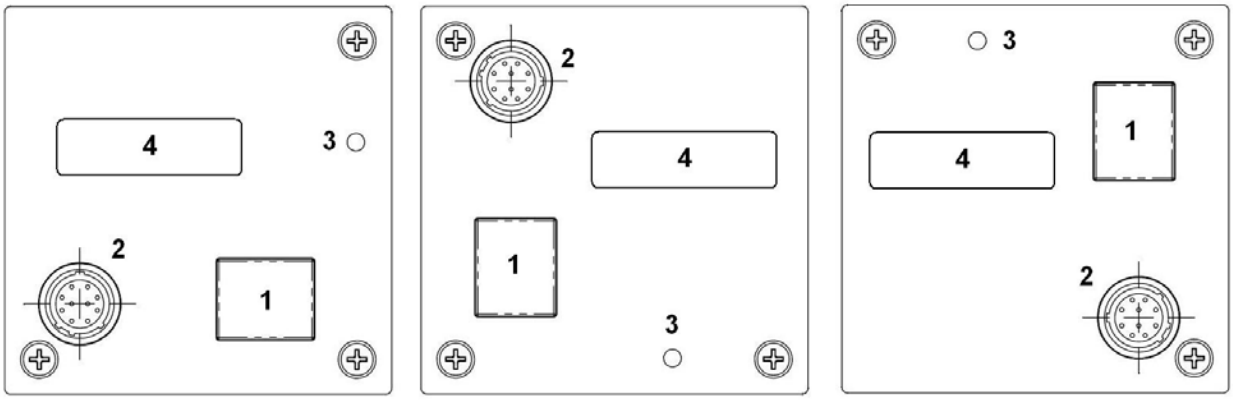

IPX-VGA / 2M30 / 2M30H-G **IPX-1M48-G** **IPX-4M15-G**

IPX-11M5 / 16M3-G

Figure 1.6a - Camera Back Panel – GigE Output

The Camera data along with the serial communication and triggering signals are serialized and continuously transmitted over the Gigabit Ethernet interface at GigE's full 1-Gb/s line rate, while delivering consistently low, predictable latencies. The network interface is compatible with IP/Ethernet networks operating at 10/100/1000 Mb/s using standard LAN CAT-5 (CAT-5e) cables.

The power and all external input/output signals are supplied to the camera via the camera power connector shown in Figure 1.6b. The corresponding pin mapping is shown in Table 1.4b. The connector is a HIROSE type miniature locking receptacle #HR10A-10R-12P.

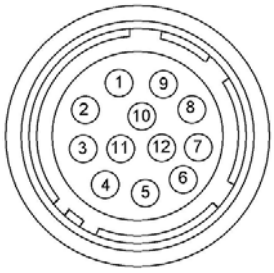

Figure 1.6b - Camera Power Connector GigE Output (viewed from rear)

Pin	Signal	Type	Description
1	- 12 V DC	Power - Input	Power Ground Return
2	+ 12 V DC	Power - Input	+ 12 V Power Supply
3	Auto Iris 1	Output	Auto Iris Control 1
4	Auto Iris 2	Output	Auto Iris Control 2
5	Auto Iris GND	Ground	Auto Iris Return
6	Strobe GND	Ground	Strobe Output Return
7	Strobe Out	TTL - Output	Strobe Light Sync Pulse
8	Trigger IN	TTL -Input	External Trigger Input
9	N/C	No Connect	Reserved for future use
10	Trigger GND	Ground	Trigger Input Return
11	N/C	No Connect	Reserved for future use
12	N/C	No Connect	Reserved for future use

Table 1.5a - Camera Power Connector Pin Mapping – GigE Output

The camera is shipped with a power cable which terminates in a HIROSE plug #HR10A-10P-12S, and has two small BNC pig-tail cables for the external trigger input (black) and strobe output (white). The corresponding BNC connector pin mapping is shown on Table 1.5b

Pin	Signal	Cable color	Description
Shield	Trigger In -	BNC Black	External Trigger Input
Signal	Trigger In +		External Trigger Input
Shield	Strobe Out -	BNC White	Strobe Light Sync Pulse
Signal	Strobe Out +		Strobe Light Sync Pulse

Table 1.5b - BNC Connectors Pin Mapping

1.4.3 Power Supply

A universal desktop power supply adapter, providing +12 VDC, +/- 5%, and up to 2.5A constant DC current, is available from Imperx for the LYNX cameras. The operating input voltage ranges from 90 to 240 VAC.

CAUTION NOTE

1. It is strongly recommended that you do not use an adapter other than the one that is available from Imperx for the camera!

1.5 MECHANICAL, OPTICAL and ENVIRONMENTAL

1.5.1 Mechanical

The camera housing is manufactured using high quality anodized aluminum. For maximum flexibility the camera has eight 10-32 UNF mounting holes (two on each side), located towards the front. An additional plate with ¼-20 UNC (tripod mount) is shipped with each camera. Figures 1.7a and 1.7b show the camera link cameras, Figures 1.8a and 1.8b – GigE cameras, and Figure 1.9 – Thermoelectrically (Peltier) cooled CL and GigE cameras respectively.

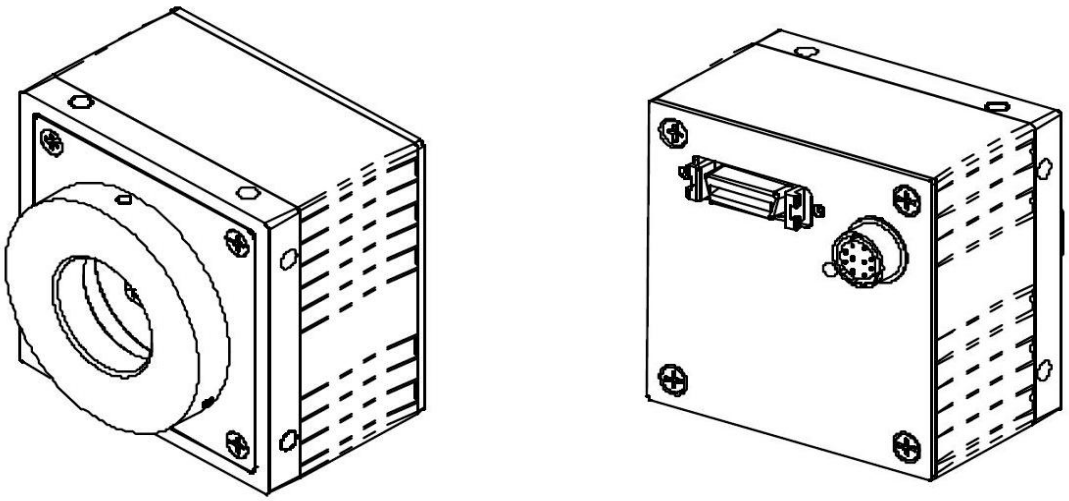

Figure 1.7a - C-mount camera link cameras – IPX-VGA-L / 1M48-L / 2M30-L / 2M30H -L

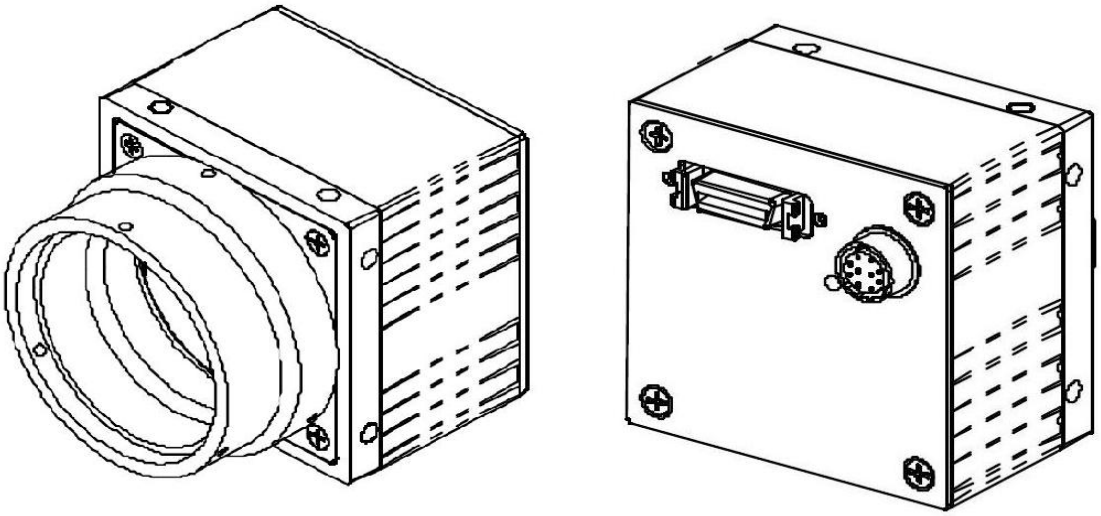

Figure 1.7b - F-mount camera link cameras – IPX-4M15-L / 11M5-L / IPX-16M3-L

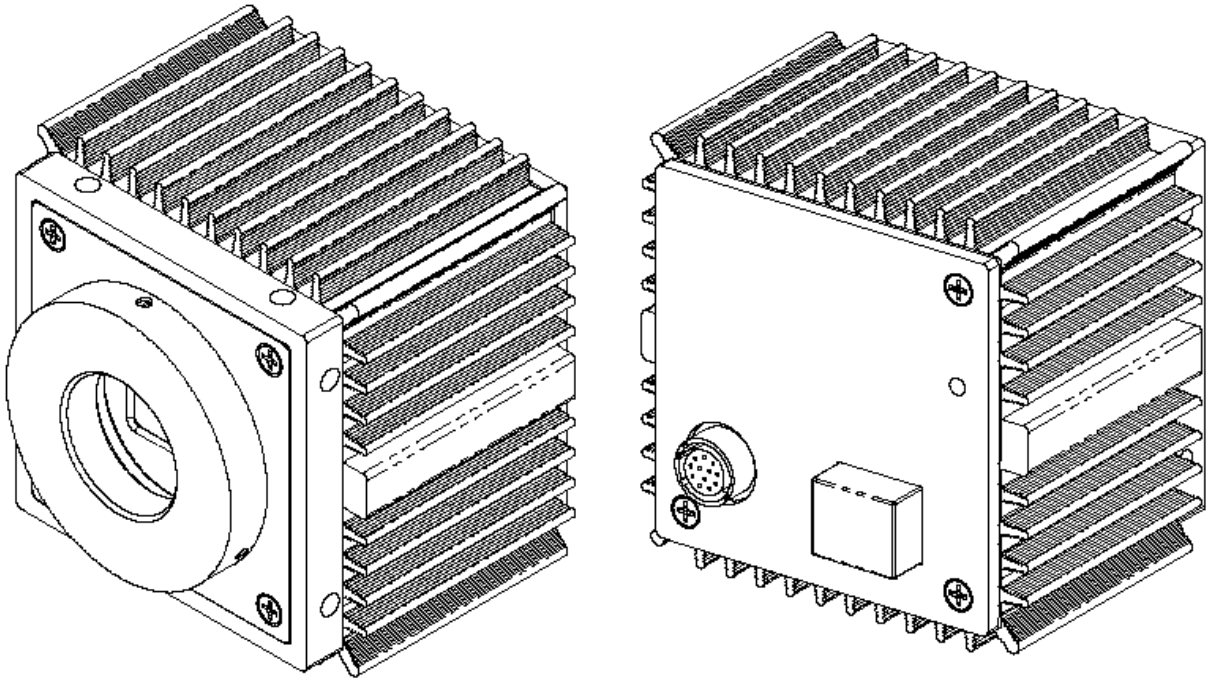

Figure 1.8a - C-mount GigE cameras – IPX-VGA-G / 1M48-G / 2M30-G / 2M30H-G

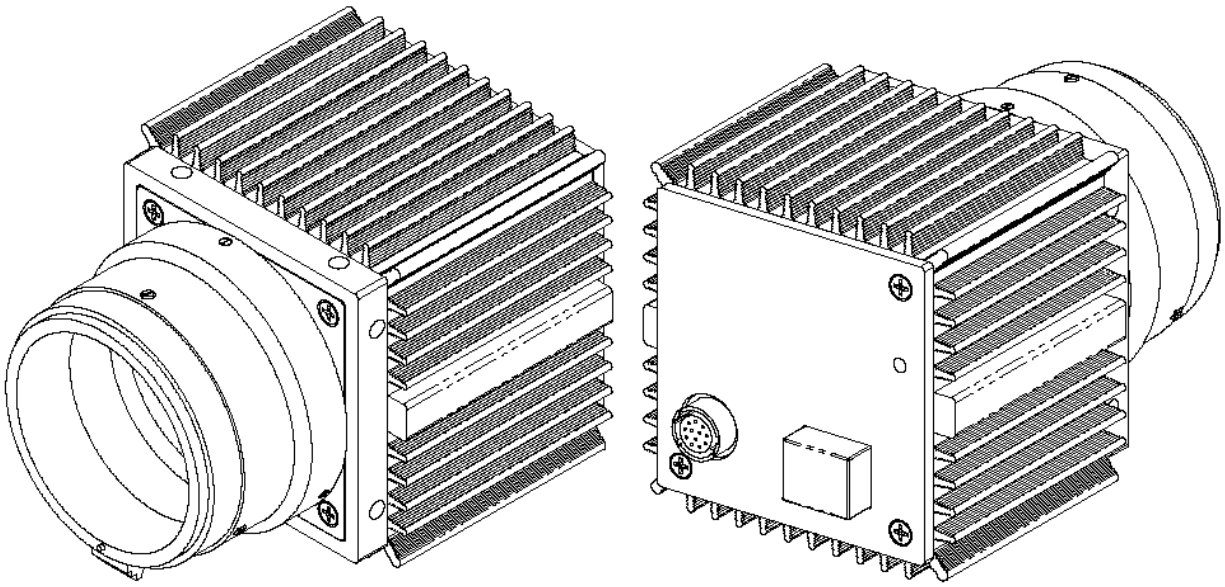

Figure 1.8b - F-mount GigE cameras – IPX-4M15-G / 11M5-G / 16M3-G

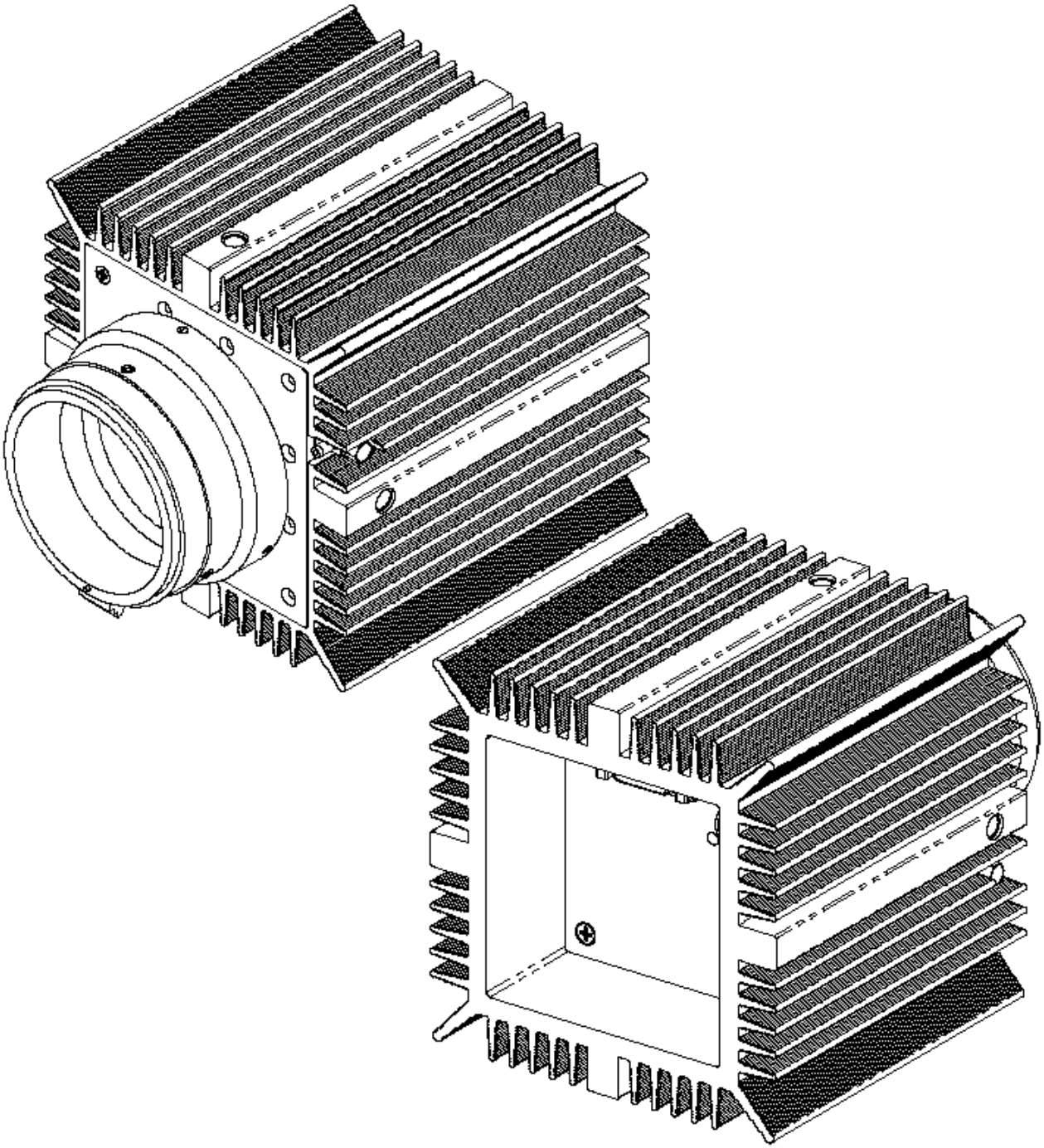

Figure 1.9 – Peltier cooled CL and GigE cameras – IPX-4M15T / 11M5T / 16M3T

Figures 1.10 to 1.15 show the dimensional drawings of IPX-VGA, IPX-1M48, IPX-2M30/H, IPX-4M15, IPX-11M5 and IPX-16M3 respectively. All dimensions are in millimeters. As of 10.01.06 11M5-L and all GigE models are shipped with black finned mid housing for better heat transfer. Figure 1.16 shows the dimensional drawings of the Peltier cooled cameras – IPX-4M15T, IPX-11M5T and IPX-16M3T (GigE and CL) respectively.

IPX-VGA120-L / IPX-VGA210-L

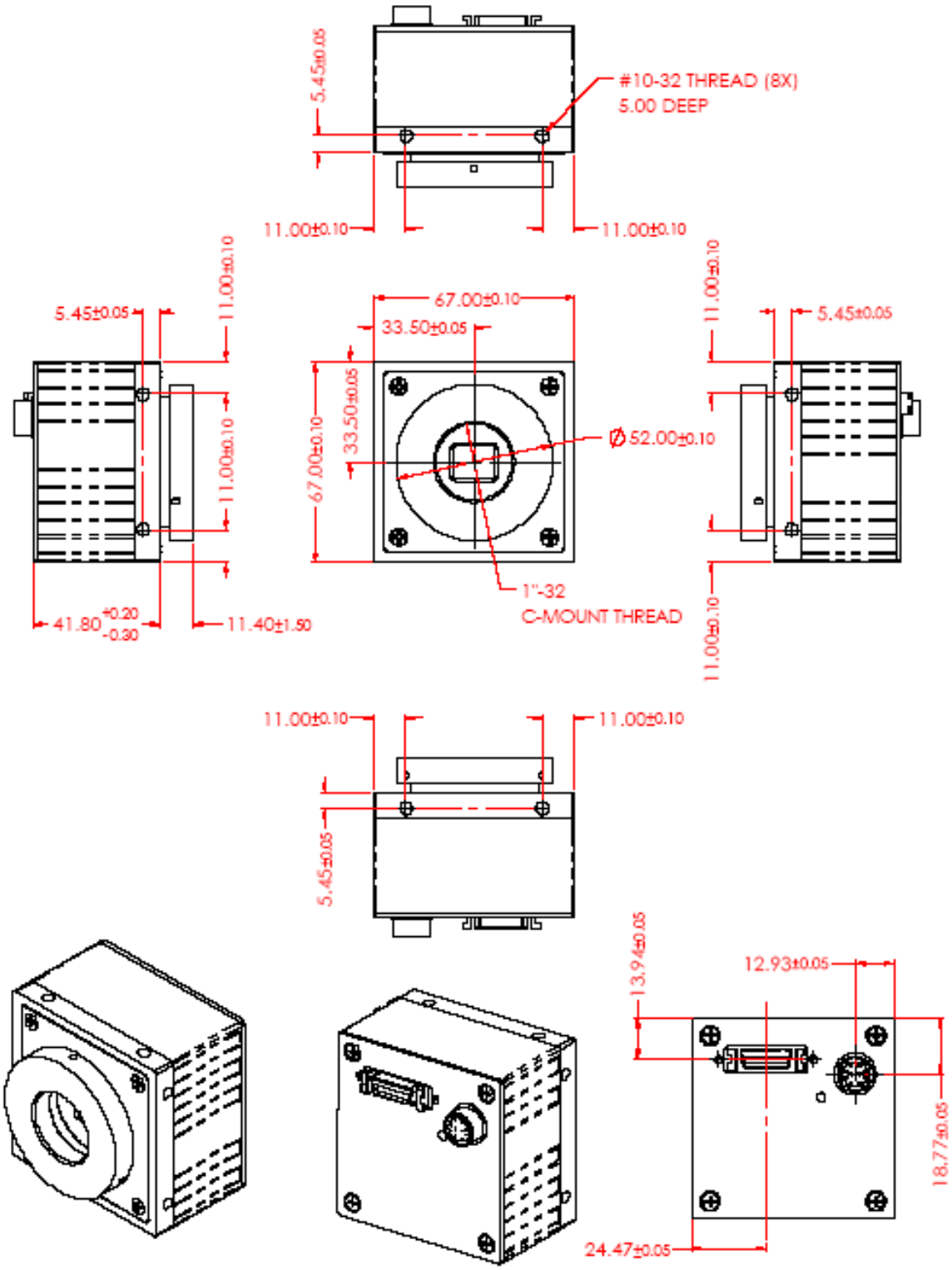

Figure 1.10a - IPX-VGA120-L and IPX-VGA210-L Dimensional Drawings.

IPX-VGA210-G

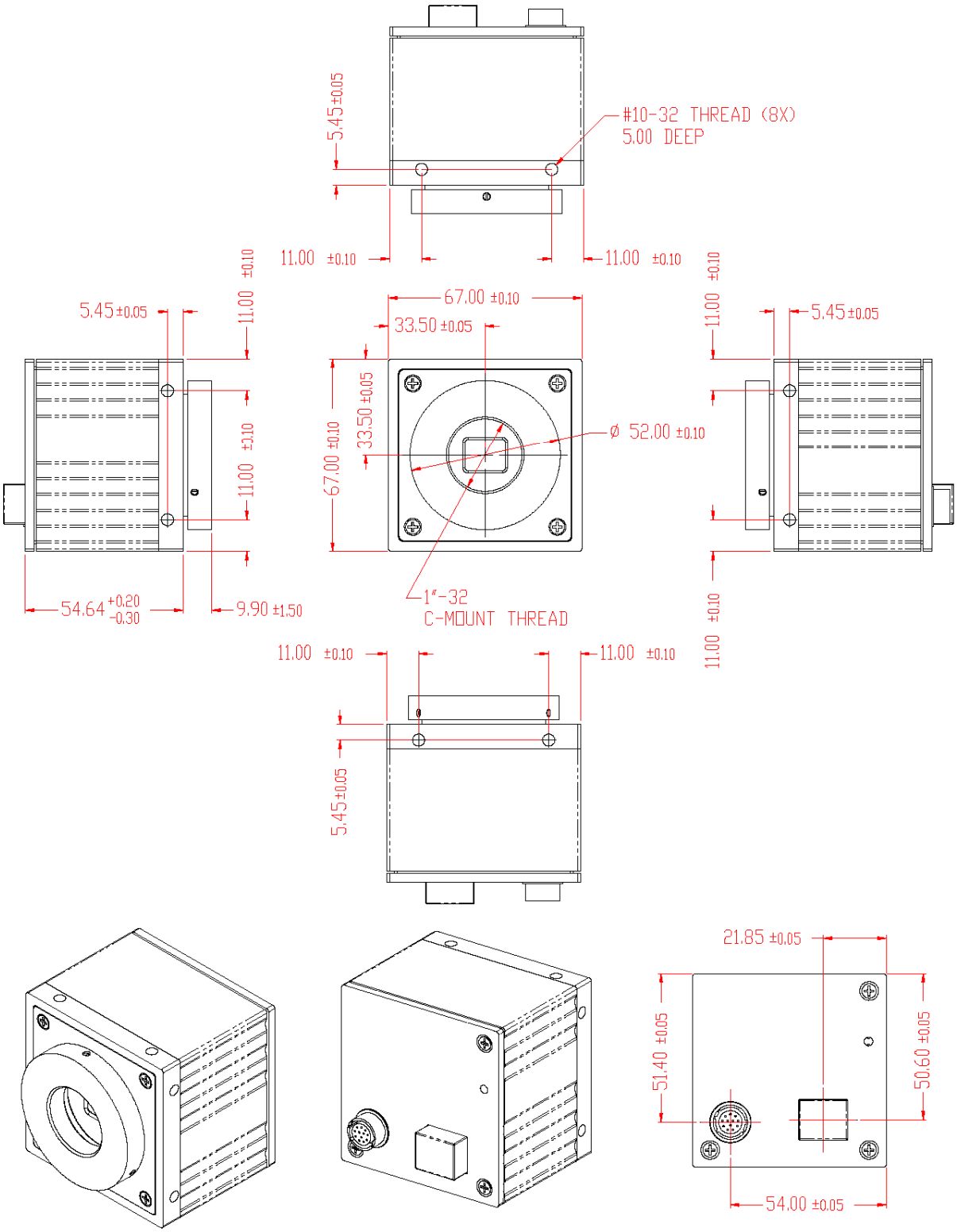

Figure 1.10b - IPX-VGA210-G (Silver Body) Dimensional Drawings

IPX-VGA210-G

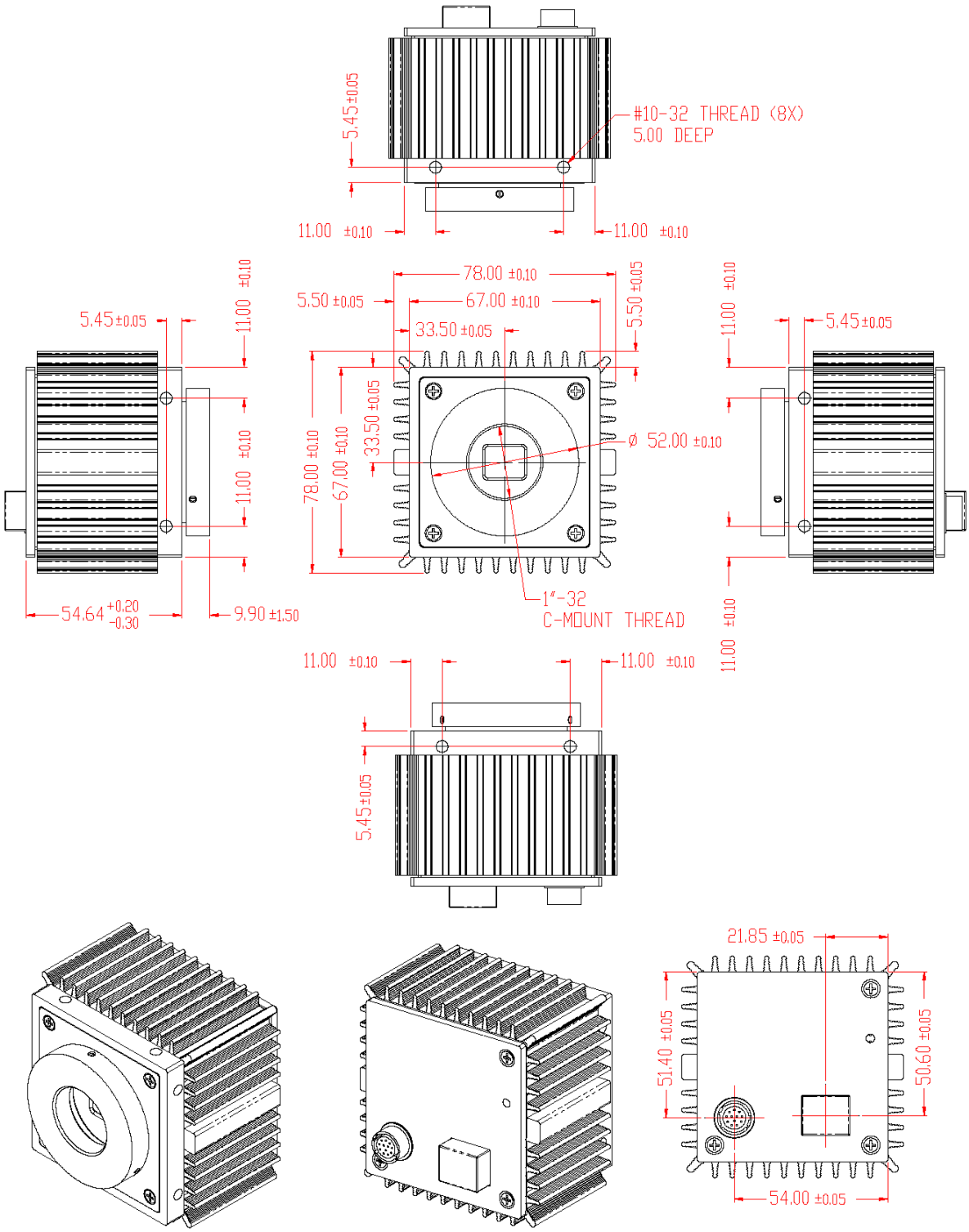

Figure 1.10c - IPX-VGA210-G (Black Body) Dimensional Drawings

IPX-1M48-L

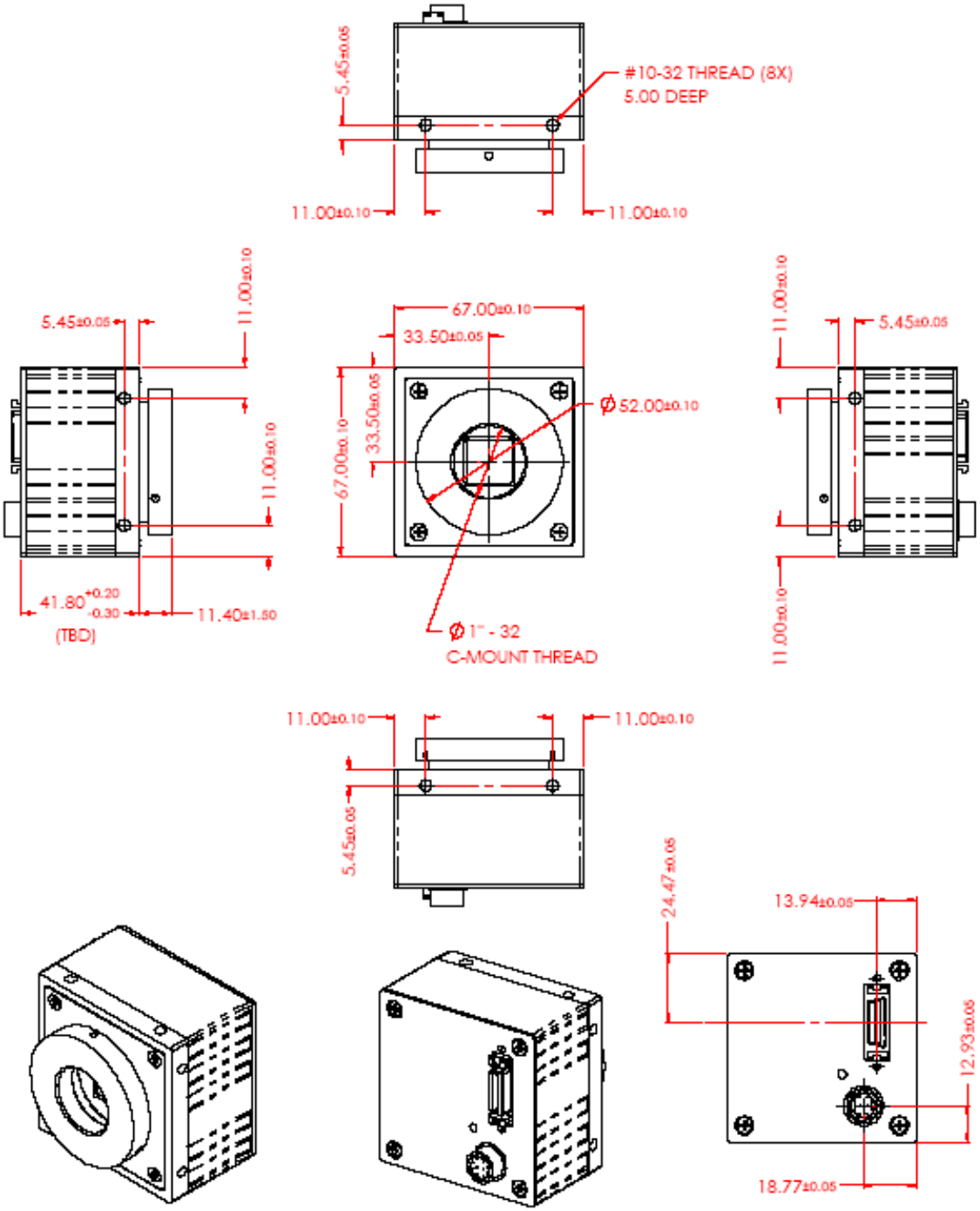

Figure 1.11a - IPX-1M48-L Dimensional Drawings

IPX-1M48-G

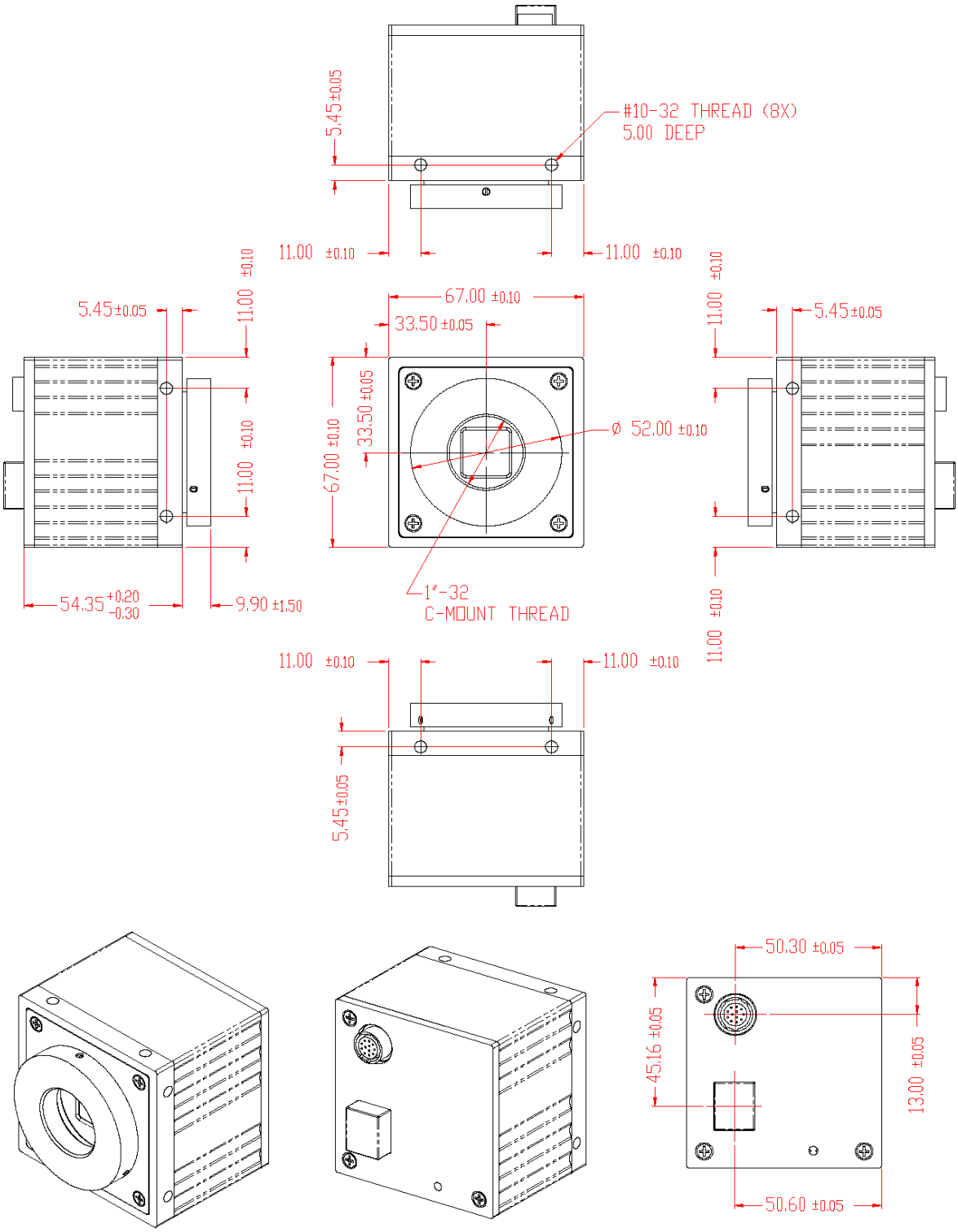

Figure 1.11b - IPX-1M48-G (Silver Body) Dimensional Drawings

IPX-1M48-G

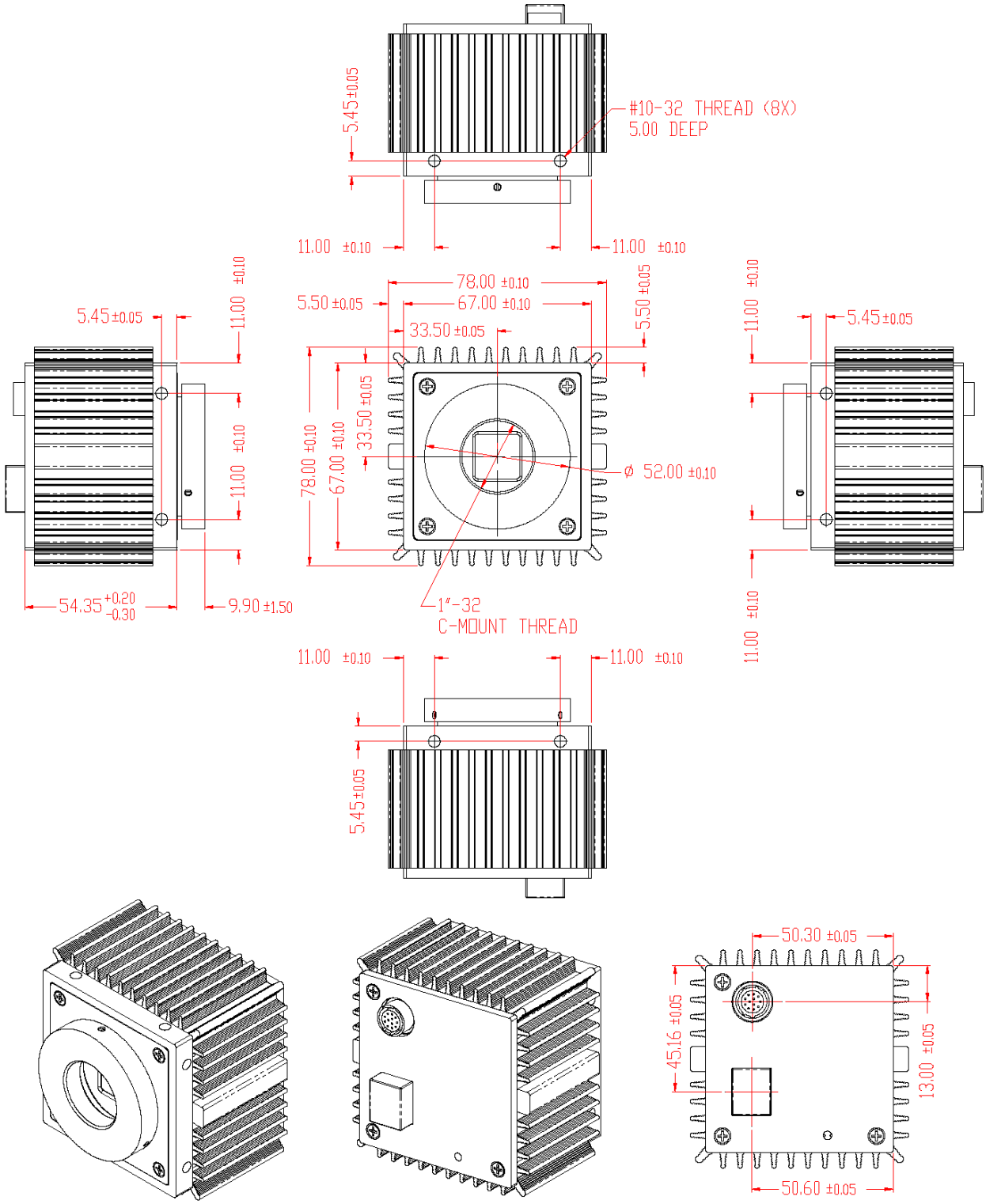

Figure 1.11c - IPX-1M48-G (Black Body) Dimensional Drawings

IPX-2M30-L / IPX-2M30H-L

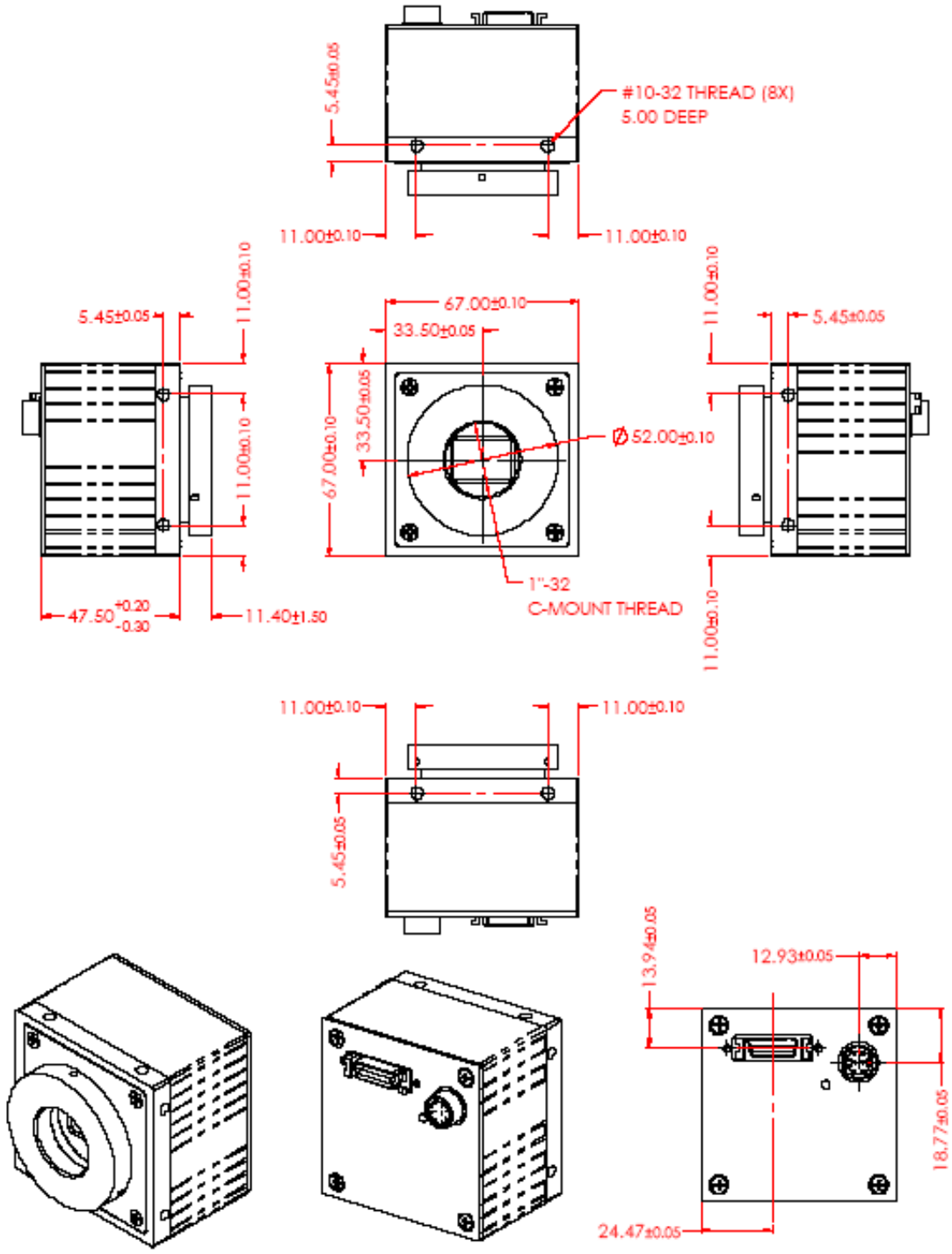

Figure 1.12a - IPX-2M30-L and IPX-2M30H-L Dimensional Drawings

IPX-2M30-G / IPX-2M30H-G

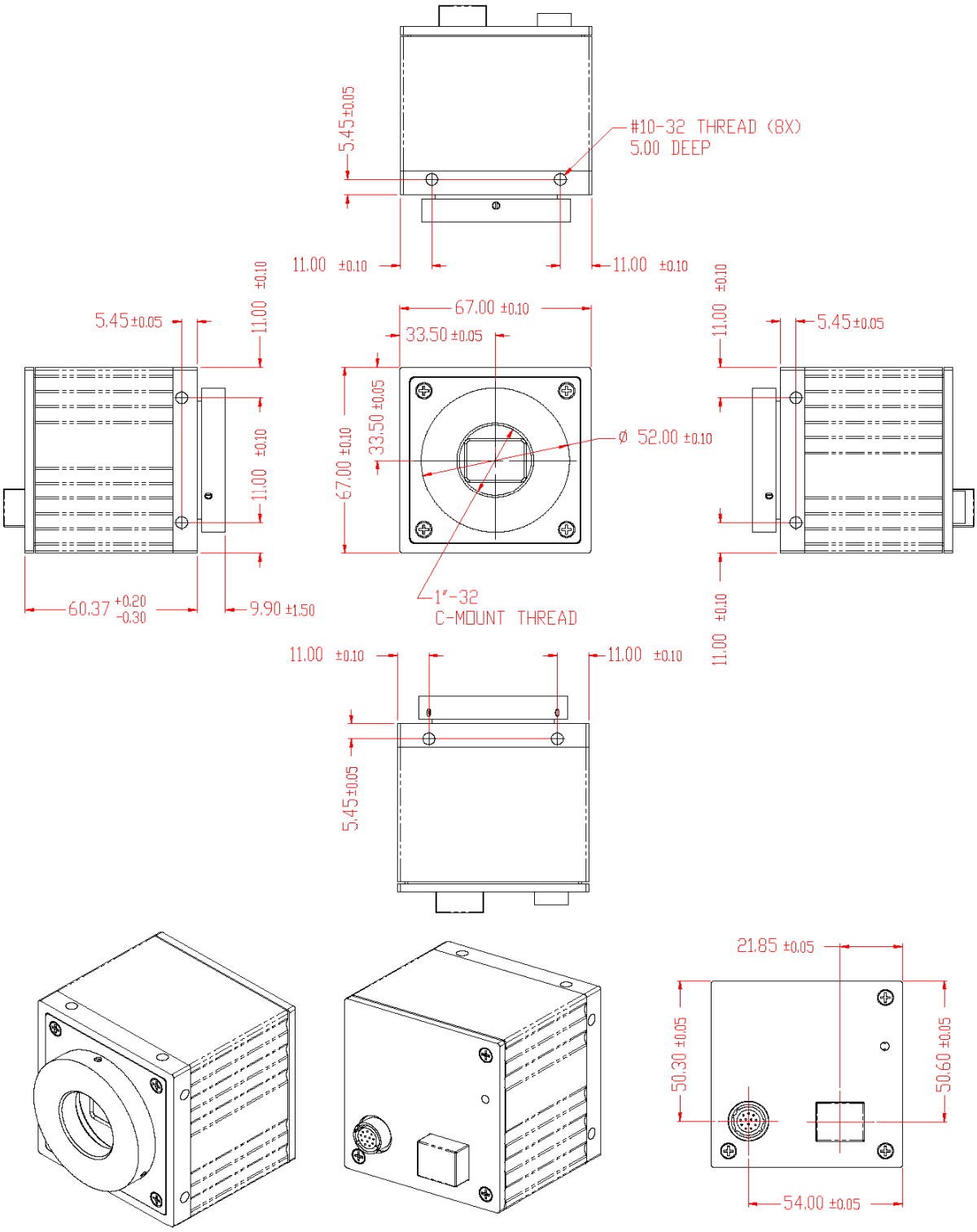

Figure 1.12b - IPX-2M30-G and IPX-2M30H-G (Silver Body) Dimensional Drawings

IPX-2M30-G / IPX-2M30H-G

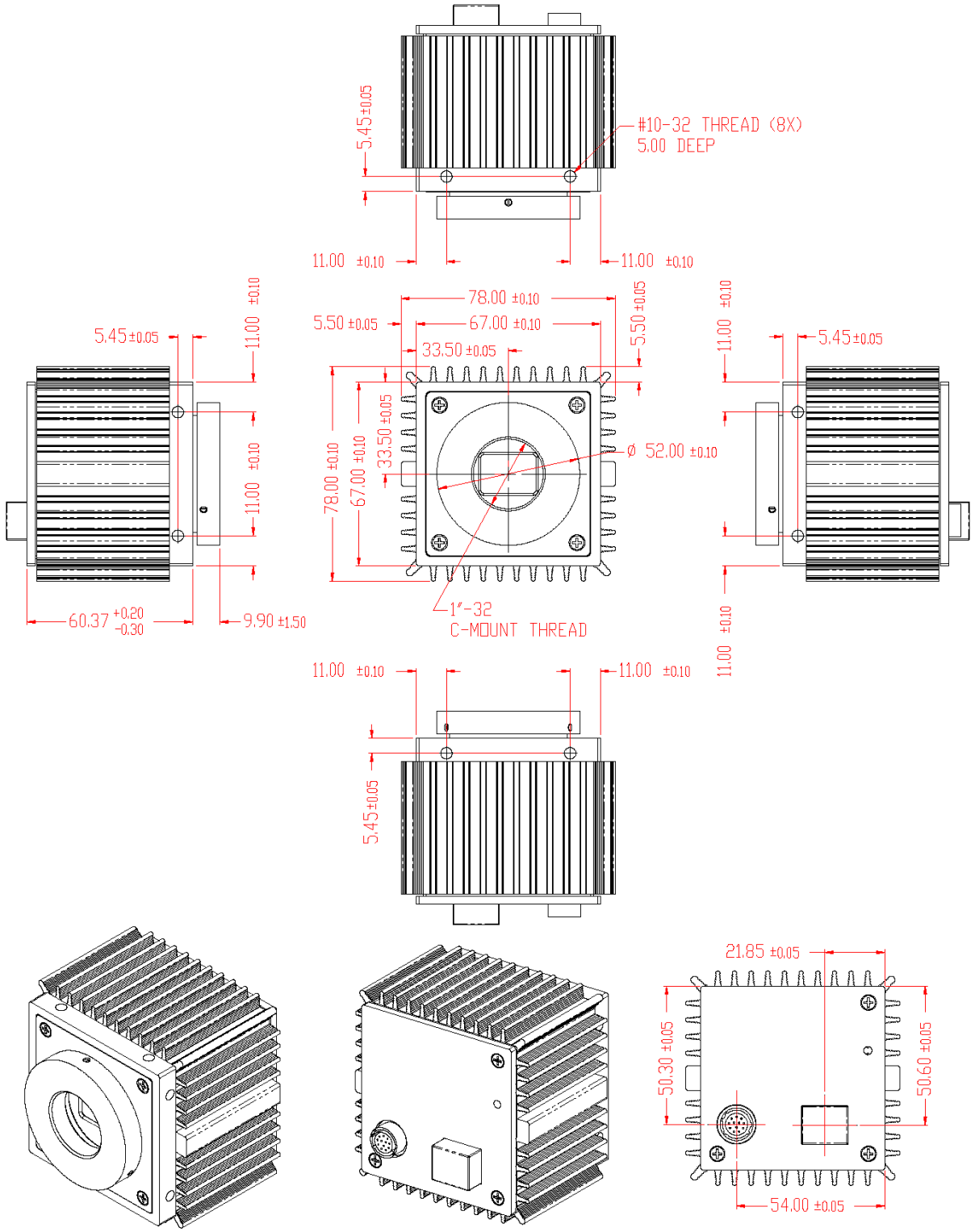

Figure 1.12c - IPX-2M30-G and IPX-2M30H-G (Black Body) Dimensional Drawings

IPX-4M15-L

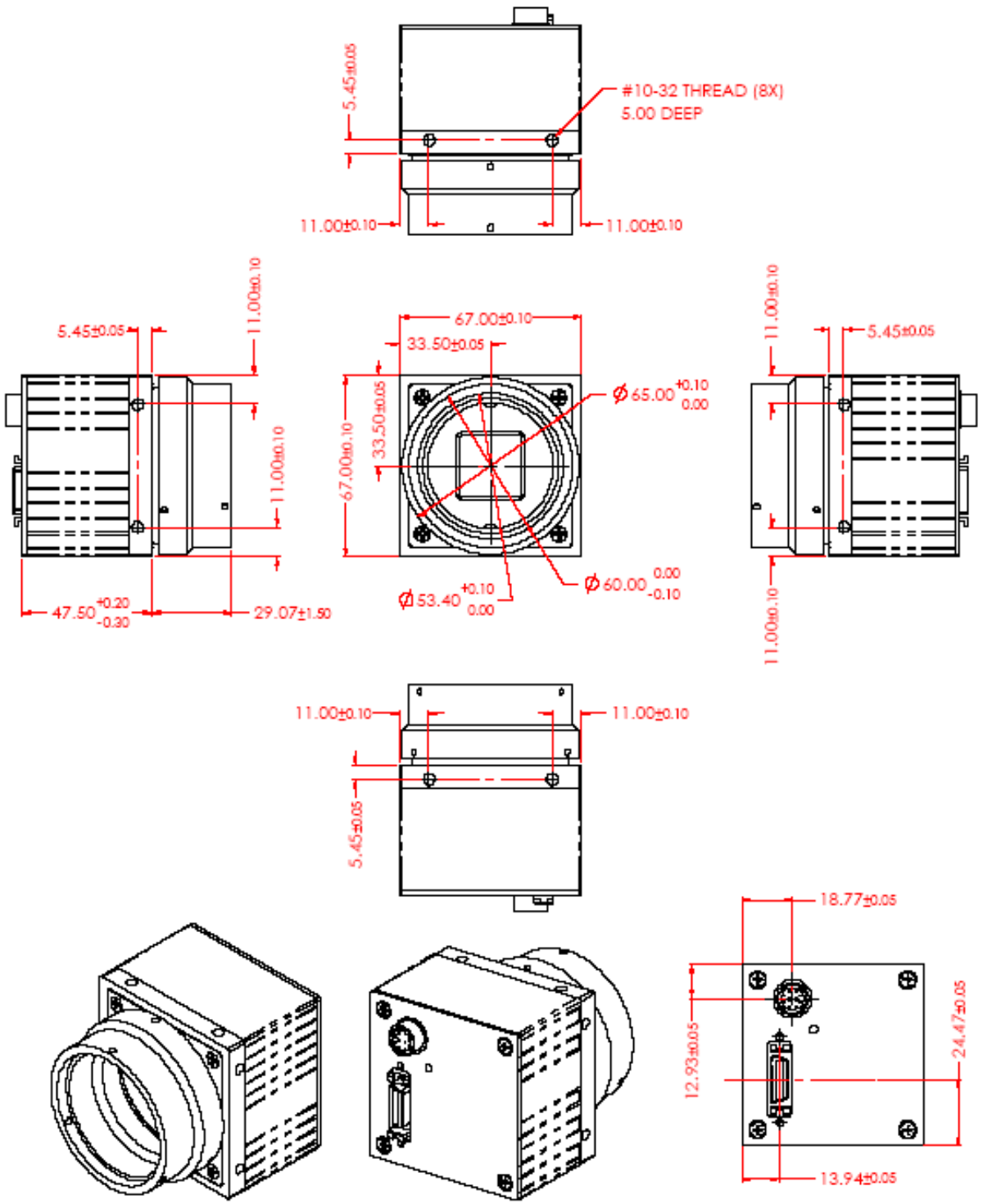

Figure 1.13a - IPX-4M15-L Dimensional Drawings

IPX-4M15-G

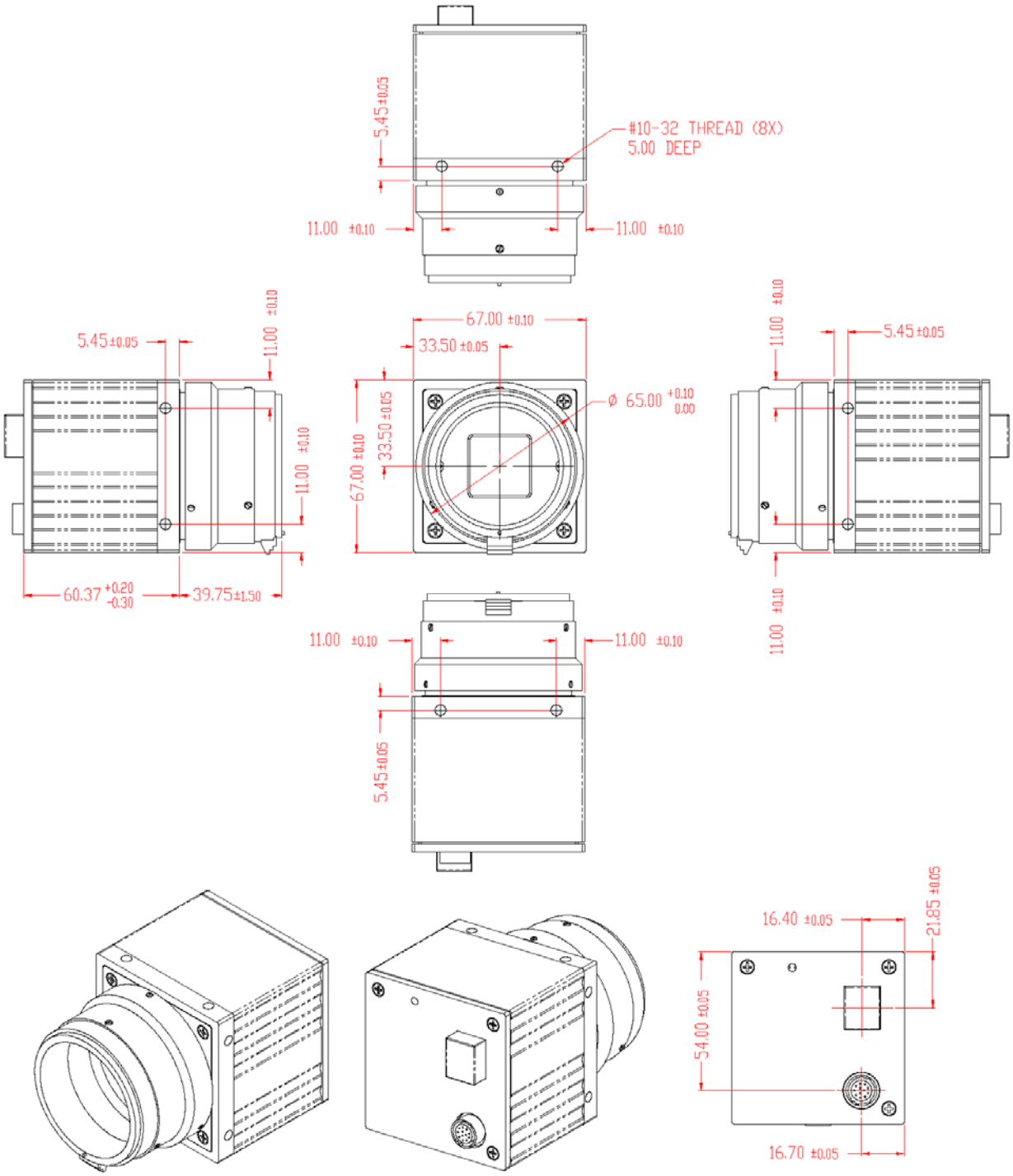

Figure 1.13b - IPX-4M15-G (Silver Body) Dimensional Drawings

IPX-4M15-G

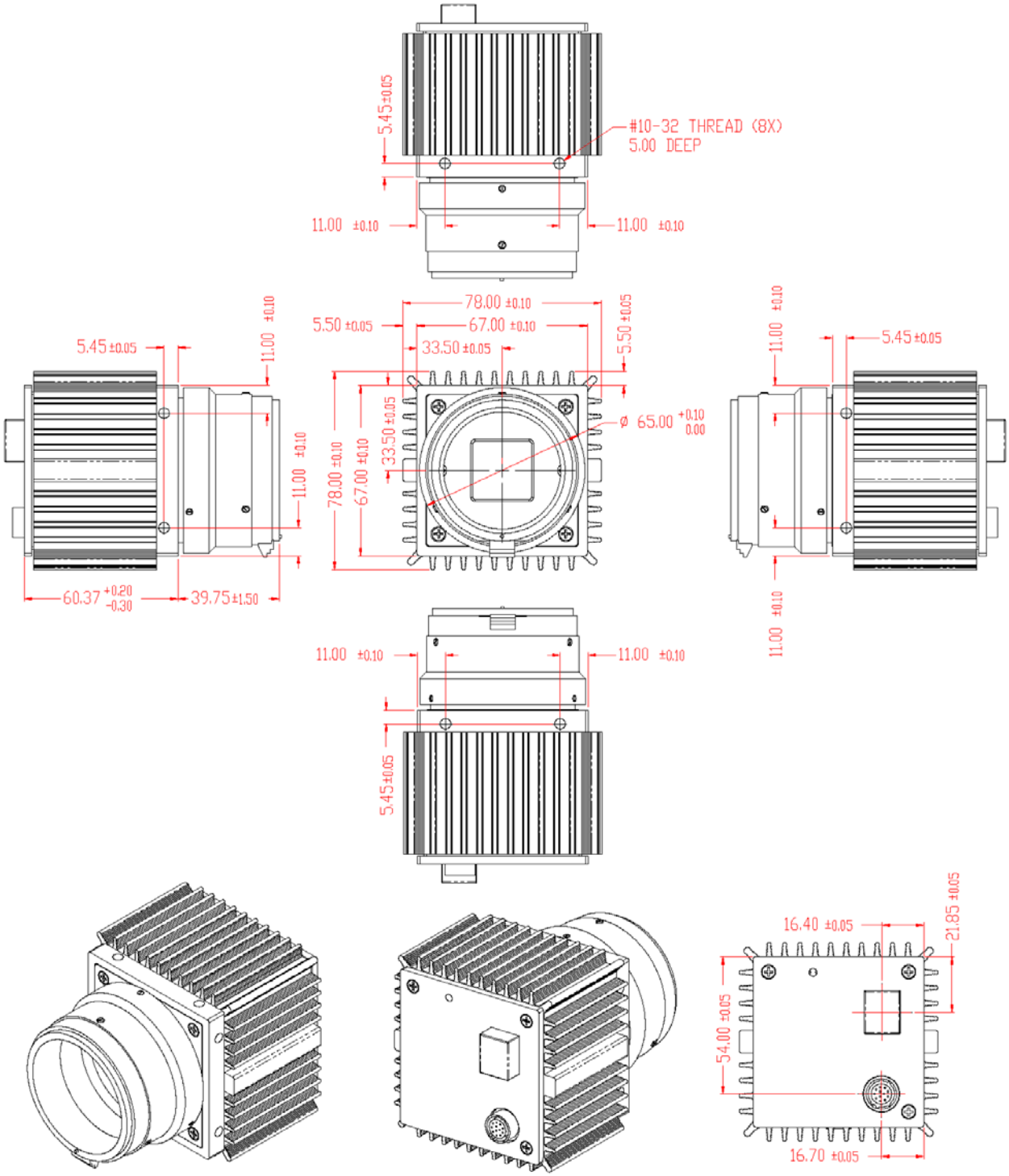

Figure 1.13c - IPX-4M15-G (Black Body) Dimensional Drawings

IPX-11M5-L

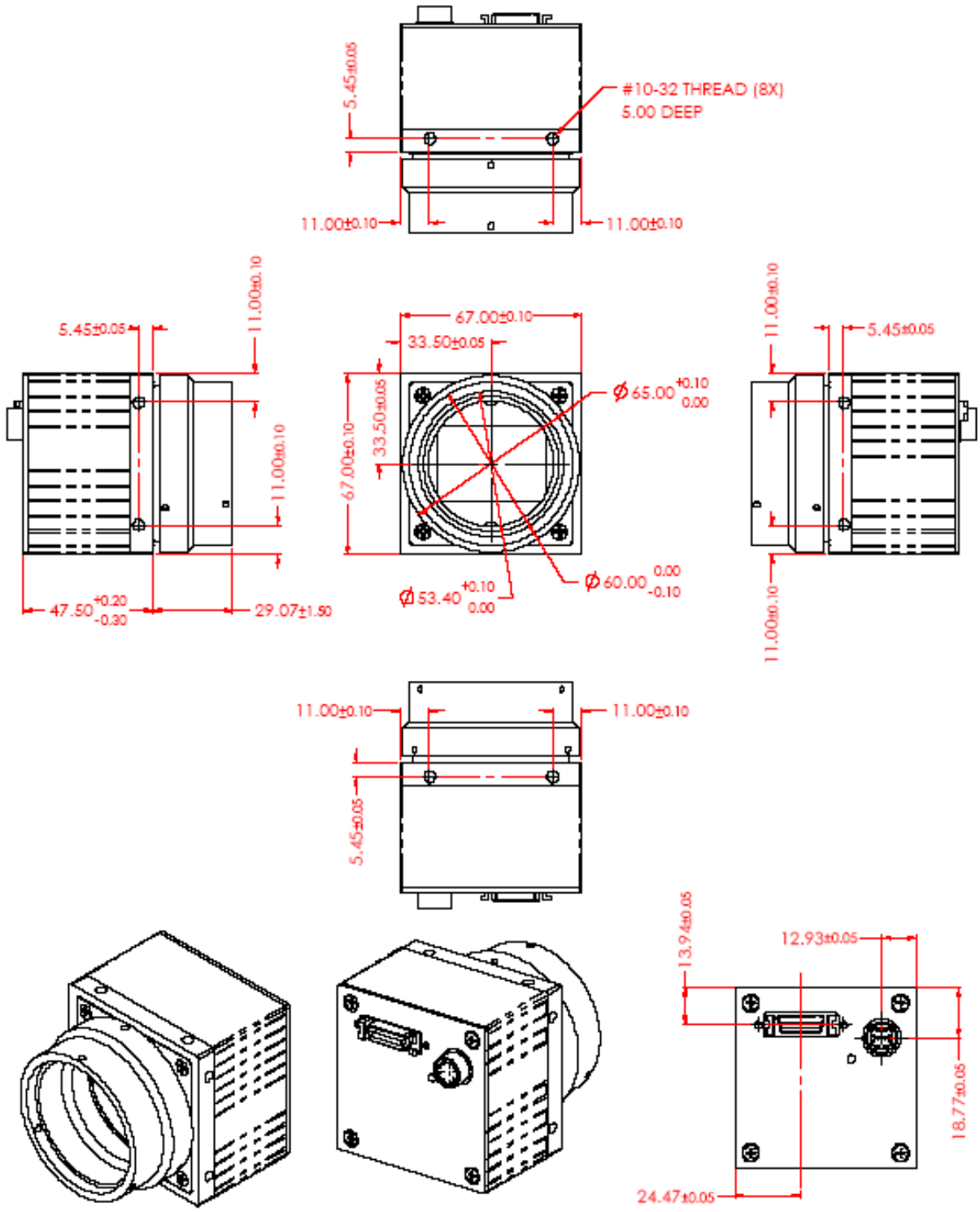

Figure 1.14a - IPX-11M5-L (Silver Body) Dimensional Drawings

IPX-11M5-L

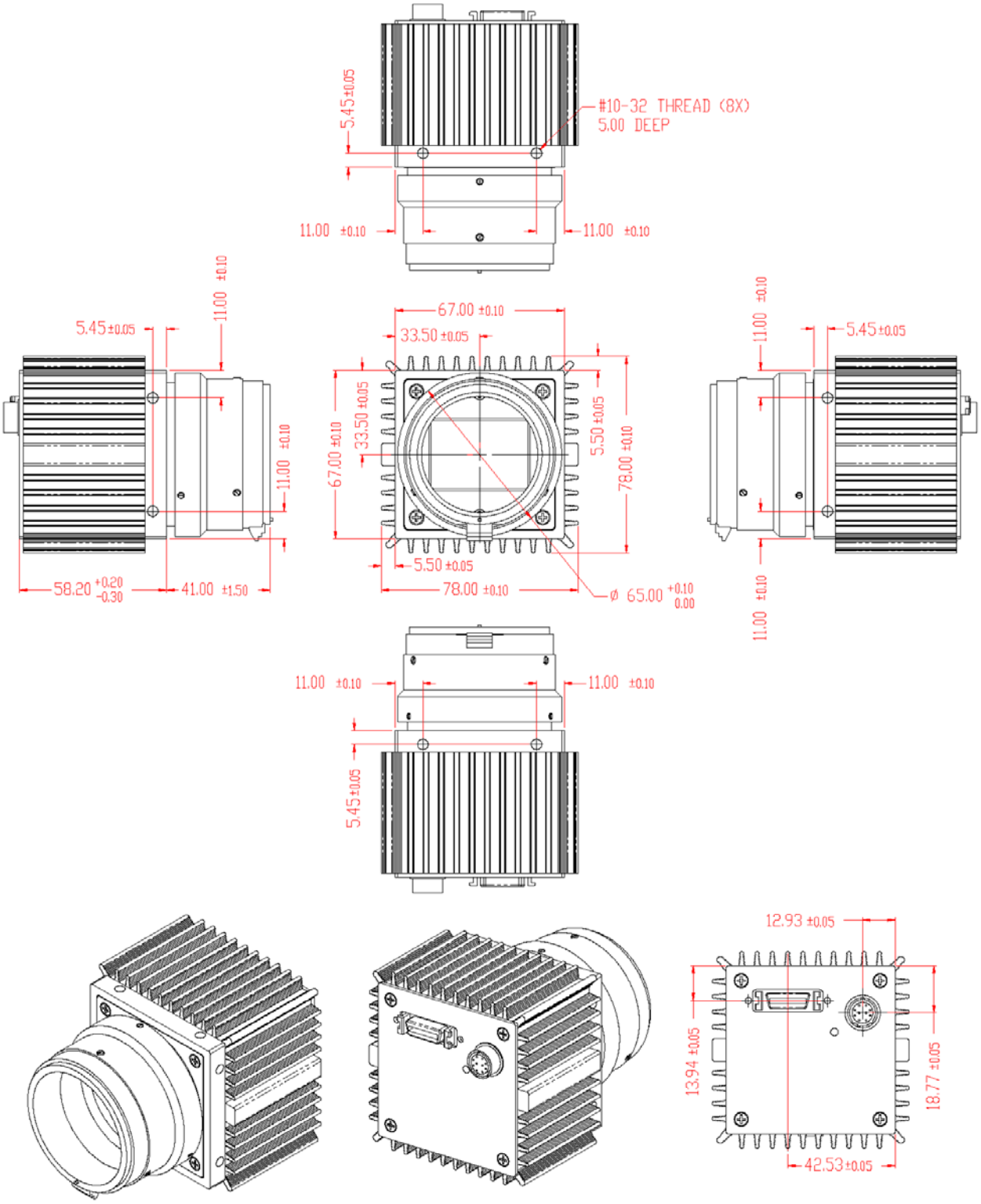

Figure 1.14b - IPX-11M5-L (Black Body) Dimensional Drawings

IPX-11M5-G

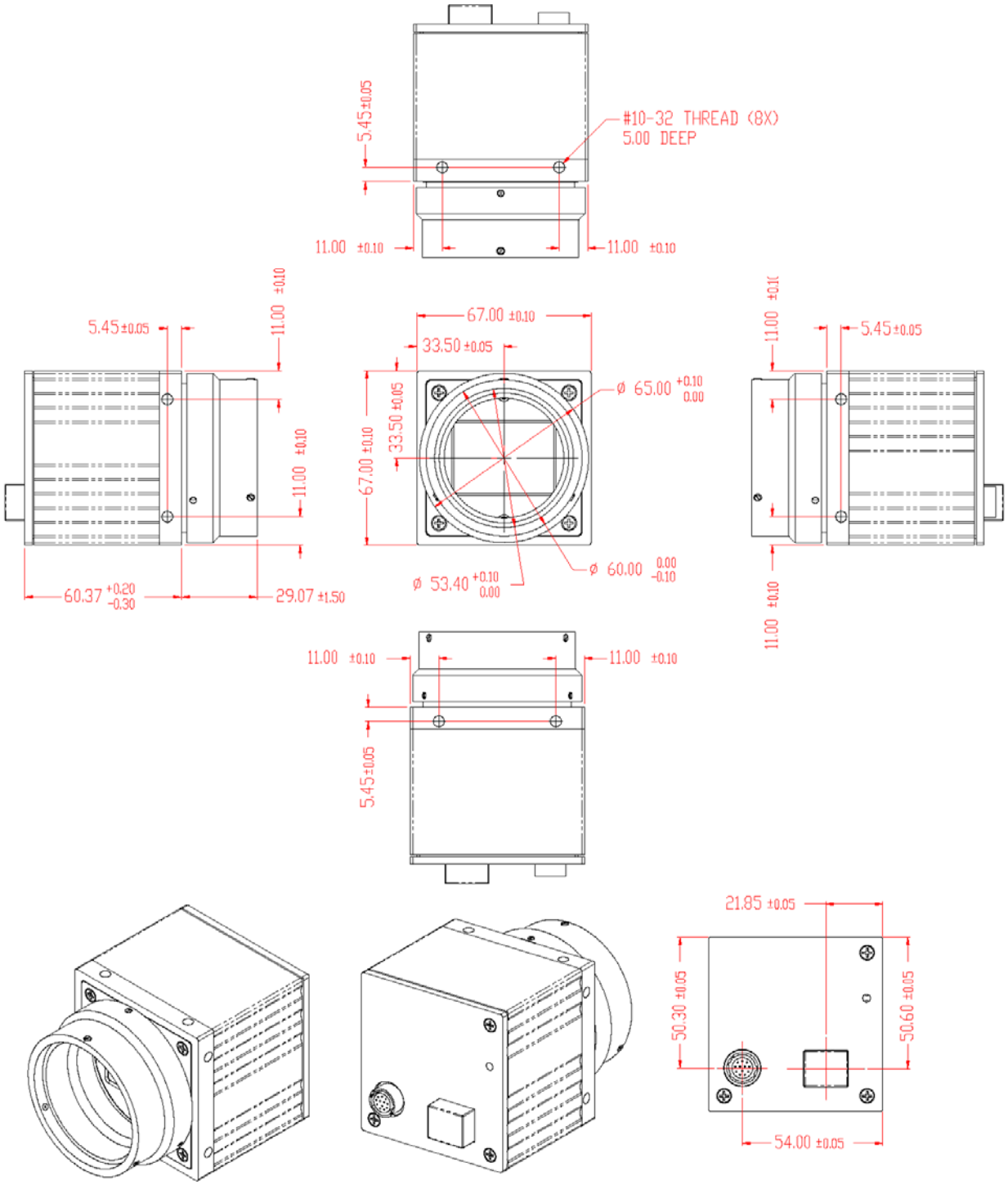

Figure 1.14c - IPX-11M5-G (Silver Body) Dimensional Drawings

IPX-11M5-G

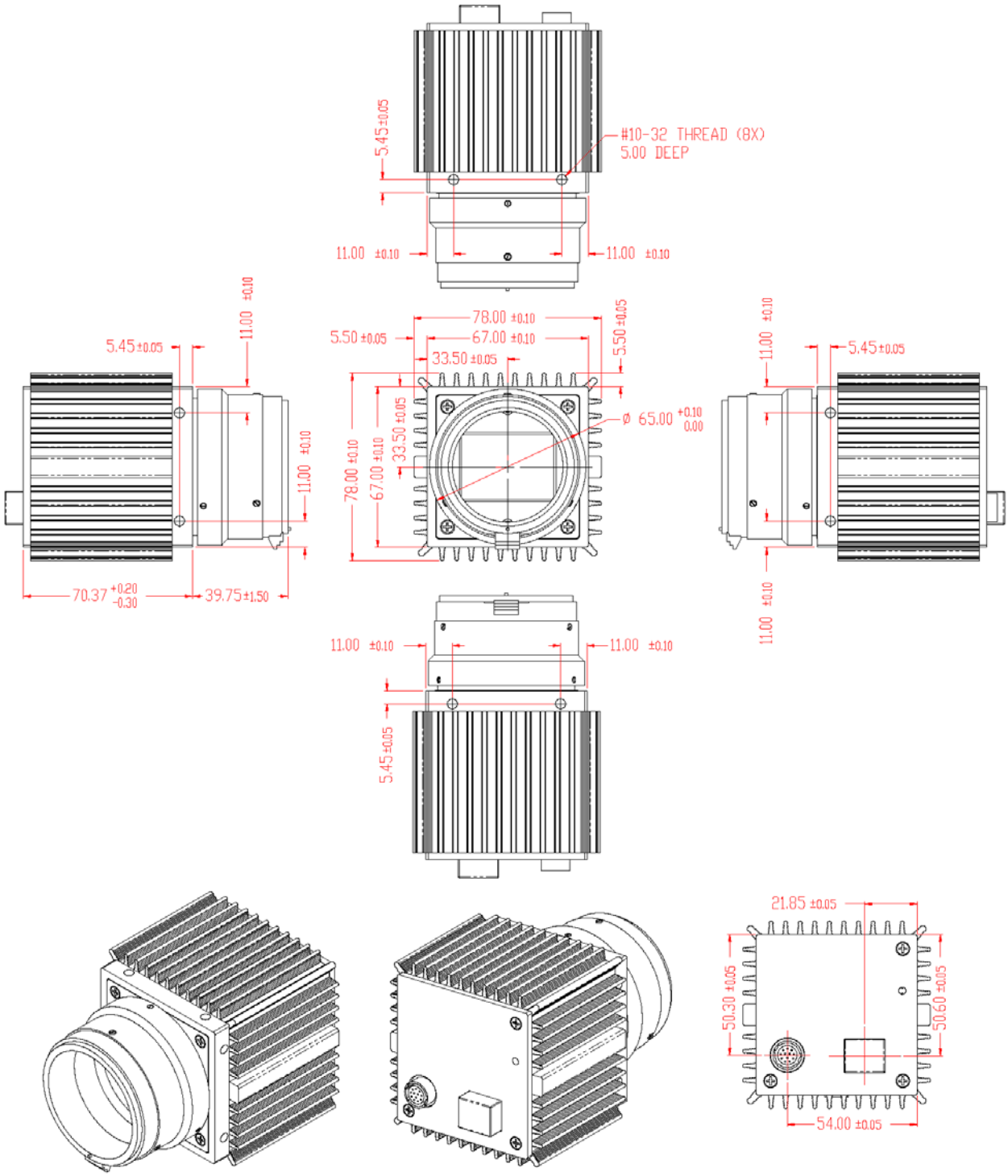

Figure 1.14d - IPX-11M5-G (Black Body) Dimensional Drawings

IPX-16M3-L

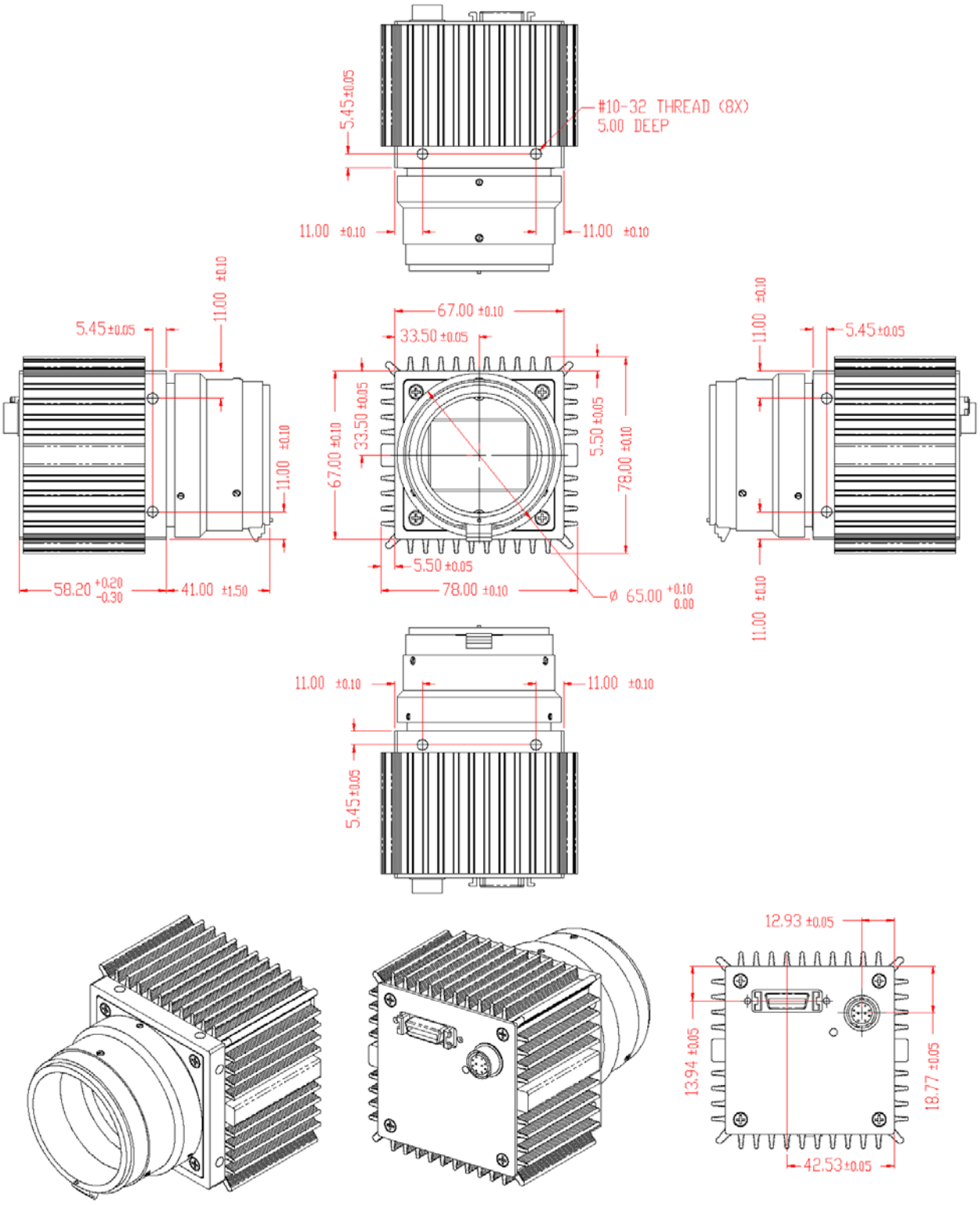

Figure 1.15a - IPX-16M3-L Dimensional Drawings

IPX-16M3-G

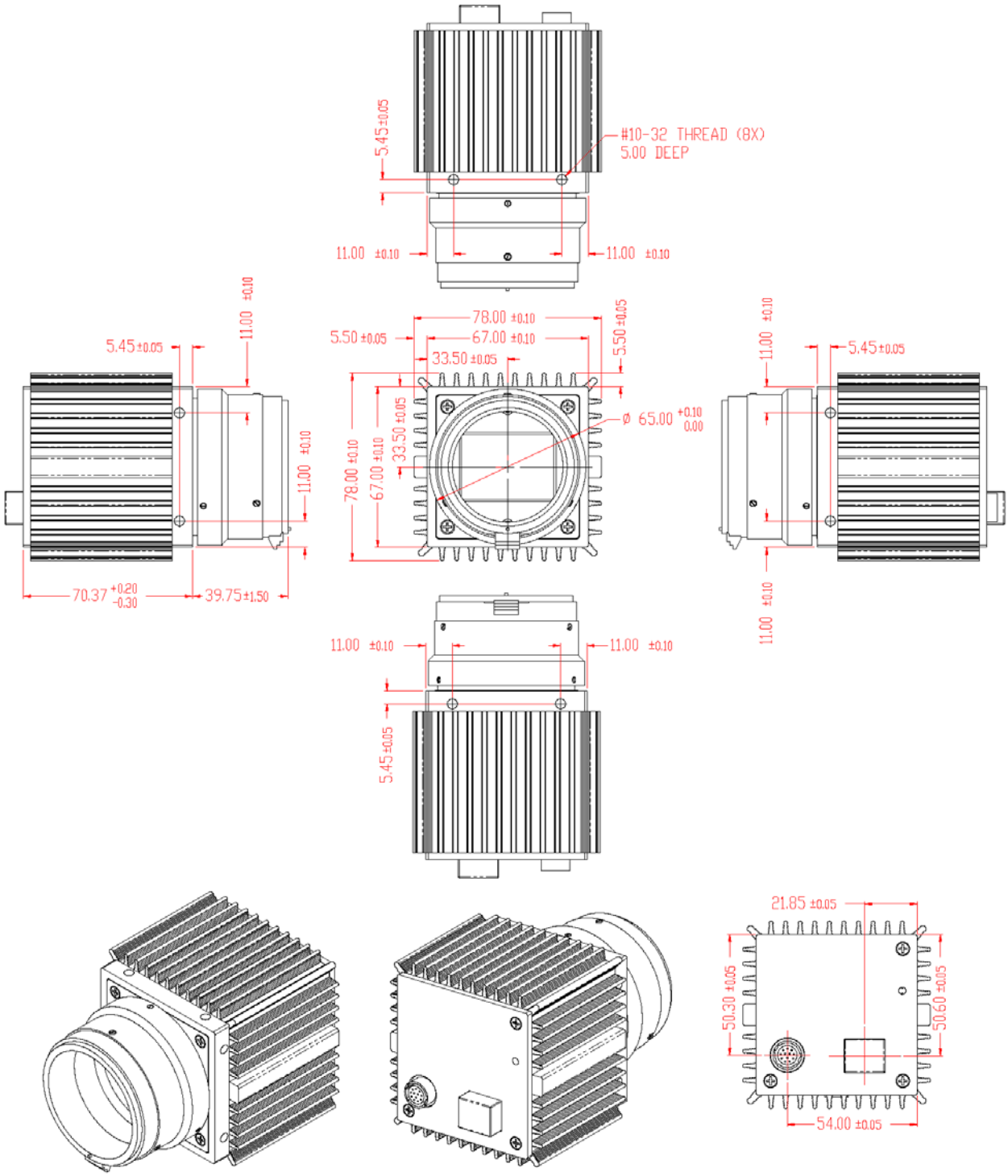

Figure 1.15b - IPX-16M3-G Dimensional Drawings

IPX-4M15T, IPX-11M5T, IPX-16M3T

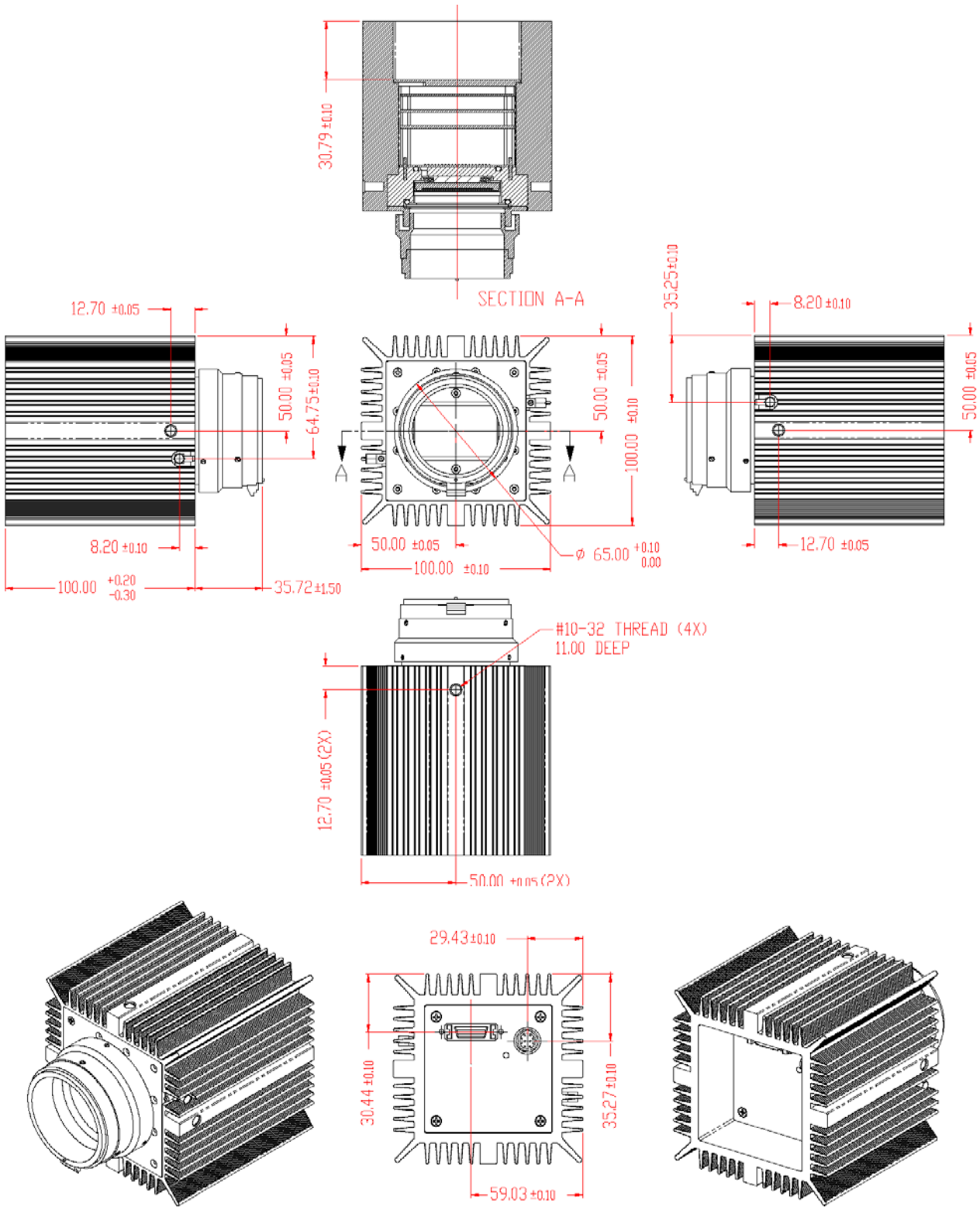

Figure 1.16 – IPX-4M15T/11M5T/16M3T Dimensional Drawings

1.5.2 Optical

The IPX-VGA, IPX-1M48, IPX-2M30 and IPX-2M30H cameras come with an adapter for C-mount lenses, which have a 17.5 mm back focal distance. The IPX-4M15, IPX-11M5 and IPX-16M3 cameras come with an adapter for F-mount lenses, which have a 46.5 mm back focal distance – Figure 1.17. An F-mount lens can be used with a C-mount camera via an F-mount to C-mount adapter, which can be purchased separately – refer to the Imperx web side for more information. The camera performance and signal to noise ratio depends on the illumination (amount of light) reaching the sensor and the exposure time. Always try to balance these two factors. Unnecessarily long exposure will increase the amount of noise and thus decrease the signal to noise ratio.

The camera is very sensitive in the IR spectral region. If necessary, an IR filter (1 mm thickness or less) can be inserted under the front lens bezel.

CAUTION NOTE

1. Avoid direct exposure to a high intensity light source (such as a laser beam). This may damage the camera optical sensor!
2. Avoid foreign particles on the surface of the imager.

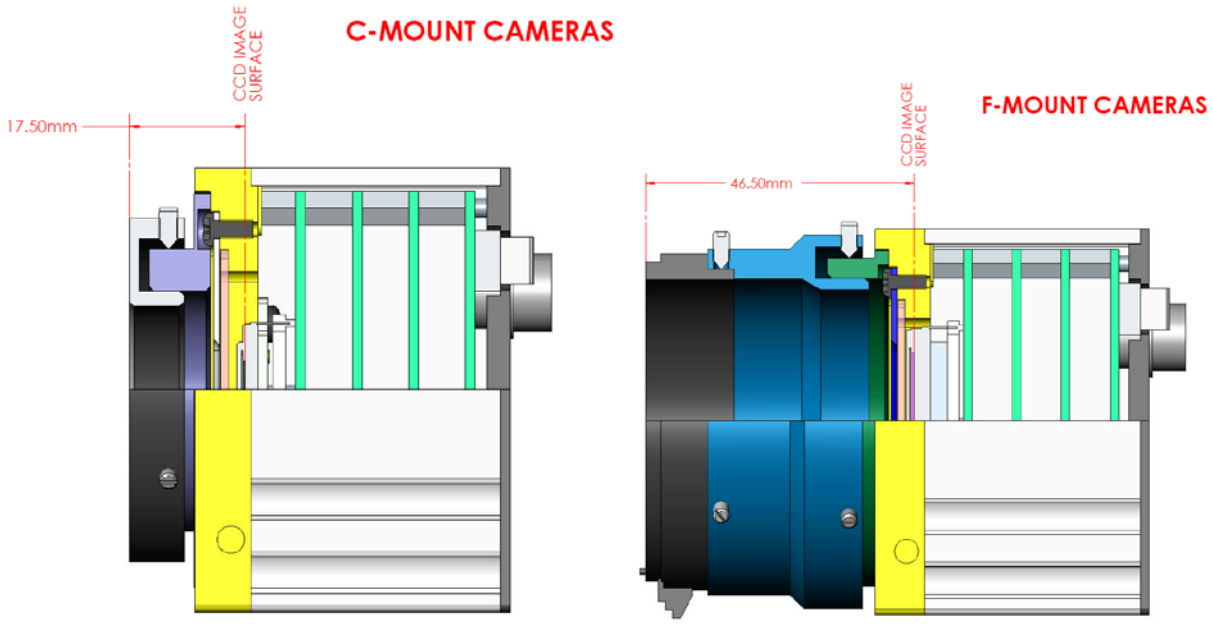

Figure 1.17 - C-mount and F-mount adapter

1.5.3 Environmental

The camera is designed to operate from -5^0 to 50^0 C in a dry environment. The relative humidity should not exceed 80% non-condensing. Always keep the camera as cool as possible. Always allow sufficient time for temperature equalization, if the camera was kept below 0^0 C!

The camera should be stored in a dry environment with the temperature ranging from -10^0 to $+ 65^0$ C.

CAUTION NOTE

1. Avoid direct exposure to moisture and liquids. The camera housing is not hermetically sealed and any exposure to liquids may damage the camera electronics!
2. Avoid operating in an environment without any air circulation, in close proximity to an intensive heat source, strong magnetic or electric fields.
3. Avoid touching or cleaning the front surface of the optical sensor. If the sensor needs to be cleaned, use soft lint free cloth and an optical cleaning fluid. Do not use methylated alcohol!

Chapter 2

Camera Features

This chapter discusses the camera's features and their use.

2.1 RESOLUTION AND FRAME RATE

2.1.1 Single Output

When operating in the single output mode, all pixels are shifted out of the HCCD register towards the left video amplifier – Video L (Figure 2.1). The resulting image has a normal orientation, full resolution and a frame rate as shown in Table 2.1.

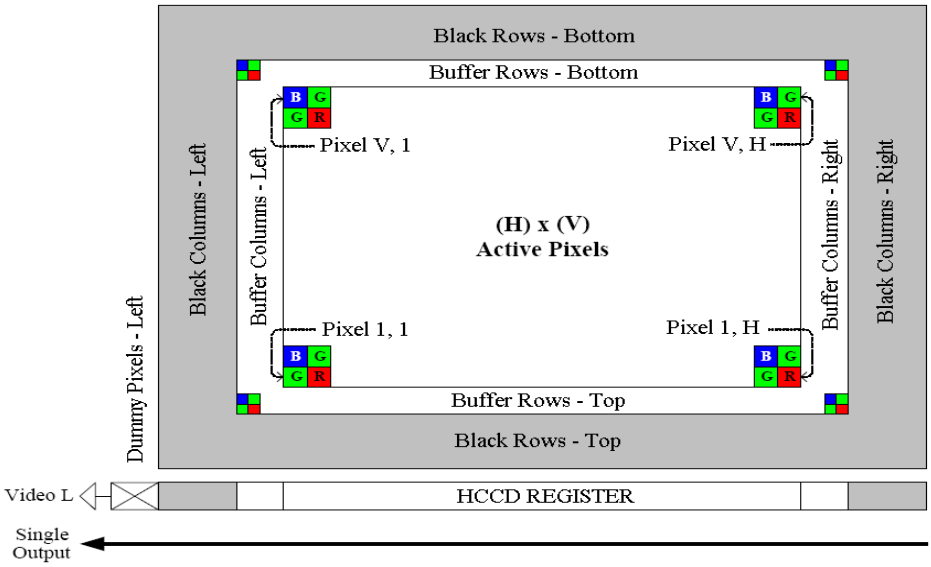

Figure 2.1 - Single Output Mode of Operation

Features	IPX-VGA-210-L/G	IPX-1M48-L/G	IPX-2M30-L/G	IPX-2M30H-L/G	IPX-4M15-L/G	IPX-11M5-L/G	IPX-16M3-L/G
Black rows - top	4	4	2	4	10	16	4
Buffer rows - top	4	2	4	2	6	8	16
Active rows - (V)	**480**	**1000**	**1200**	**1080**	**2048**	**2672**	**3248**
Buffer rows - bottom	4	2	4	2	8	8	16
Black rows - bottom	0	0	4	4	0	16	40
Dummy pixels - left	12	8	4	4	12	4	13
Black columns - left	24	12	16	28	28	20	28
Buffer columns - left	4	2	4	4	4	16	16
Active pixels - (H)	**640**	**1000**	**1600**	**1920**	**2048**	**4000**	**4872**
Buffer columns - right	4	2	4	4	4	16	16
Black columns - right	24	12	16	28	28	20	28
Dummy pixels - right	12	8	4	4	12	4	13
Frame rate - single	110 fps	30 fps	17	16 fps	7.5 fps	2.5 fps	1.5 fps
Frame rate - dual	210 fps	48 fps	33 fps	32 fps	15 fps	5 fps	3 fps

Table 2.1 - Pixel Structure and Frame Rates

2.1.2 Dual Output

When operating in a dual output mode, the image is split in two equal parts, each side consisting of half of the horizontal pixels and the full vertical lines. The first (left) half of the pixels are shifted out of the HCCD register towards the left video amplifier – Video L, while the second (right) half of the pixels are shifted towards the right video amplifier – Video R (Figure 2.2). In the horizontal direction the first half of the image appears normal and the second half is left/right mirrored. The camera reconstructs the image by flipping the mirrored portion and rearranging the pixels. Dual output is the default factory mode of operation – refer to the Configuration Memory section.

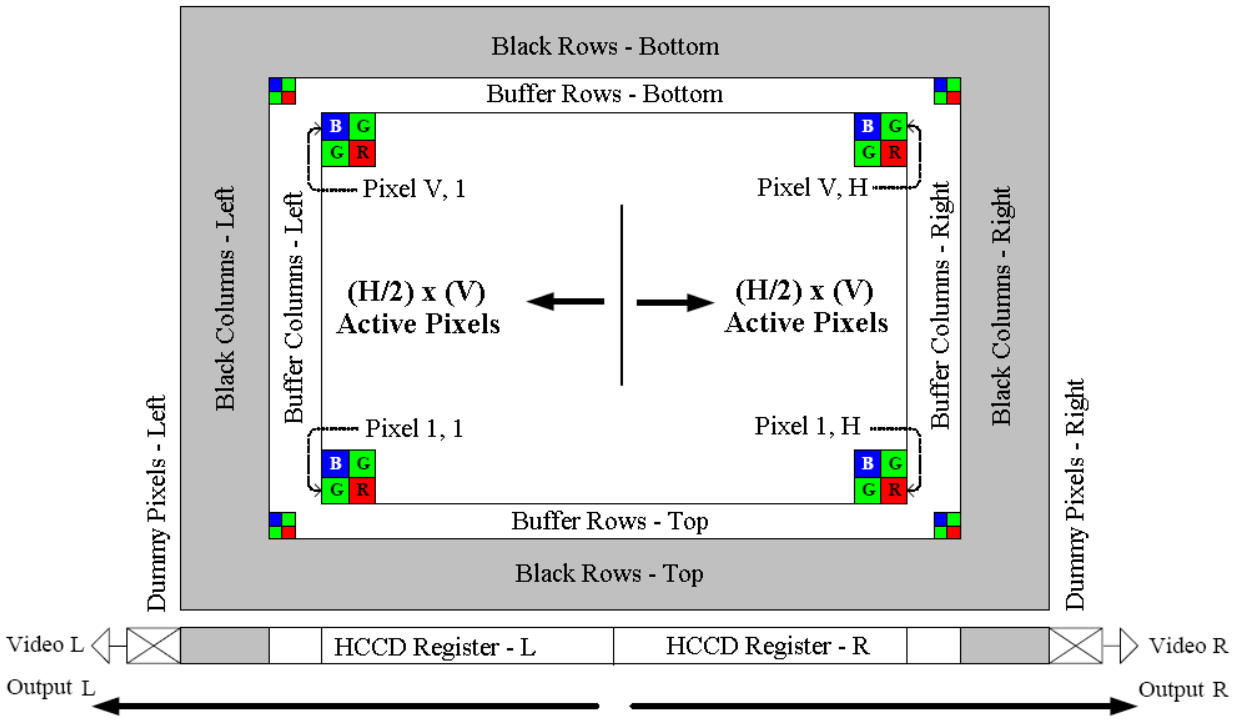

Figure 2.2 - Dual Output Mode of Operation.

For normal mode of operation the frame rate can be calculated using the following formula (Formula 1.1). Please note that the formula is not applicable if the shutter is enabled:

$$\text{Frame rate [fps]} = 1 / \text{exposure time [sec]} \qquad (1.1)$$

2.1.3 Center Columns Output (IPX-VGA210-L/G only)

The 'center columns' output mode is only available in the IPX-VGA210-L/G. In this mode the image field has only 228 horizontal pixels located in the center of the imager – Figure 2.3. When operating in a single output mode, all 228 pixels are shifted out of the HCCD register towards the left video amplifier – Video L (Figure 2.4). The resulting image has a normal orientation and a frame rate of 289 frames per second.

When operating in a dual output mode, the image is split in two equal parts, each having 114 pixels and full vertical lines. The frame rate in this mode is 546 frames per second. The first (left) half of the pixels are shifted out of the HCCD register towards the left video amplifier – Video L, while the second (right) half of the pixels is shifted towards the right video amplifier – Video R (Figure 2.5). In the horizontal direction the first half of the image appears normal and the second half is left/right mirrored. The camera reconstructs the image by flipping the mirrored portion and rearranging the pixels.

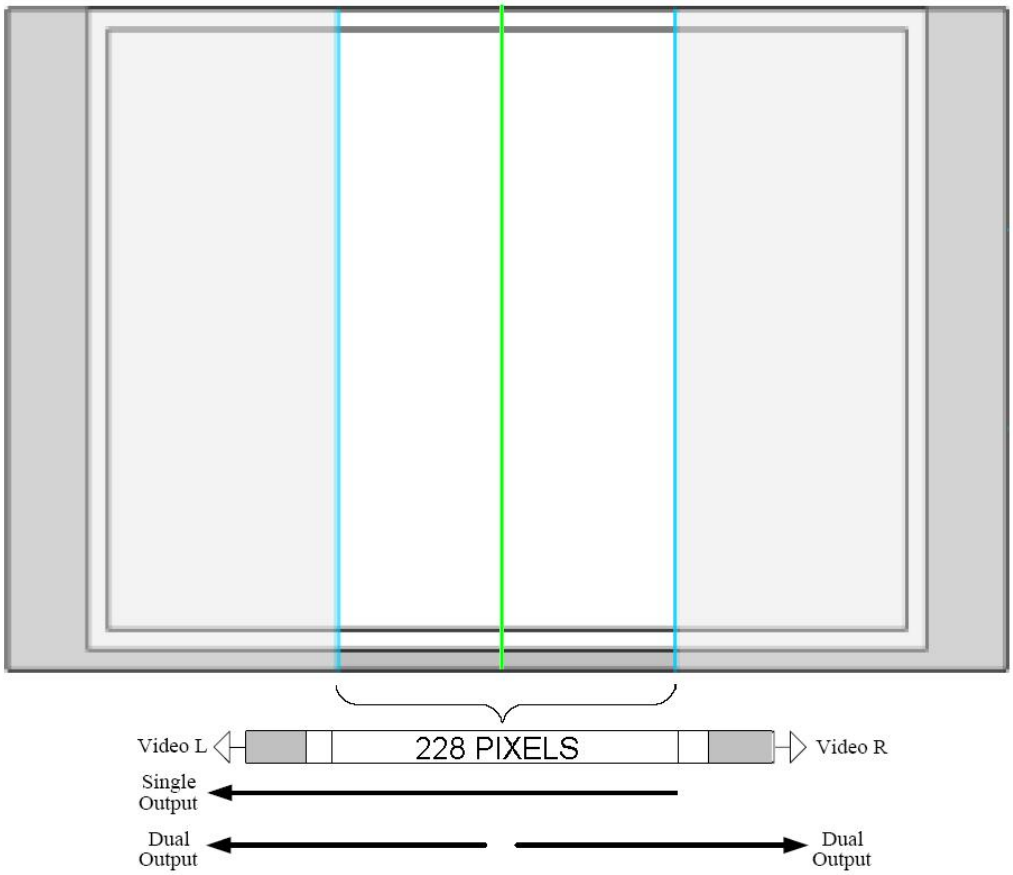

Figure 2.3 - Center columns output mode of operation

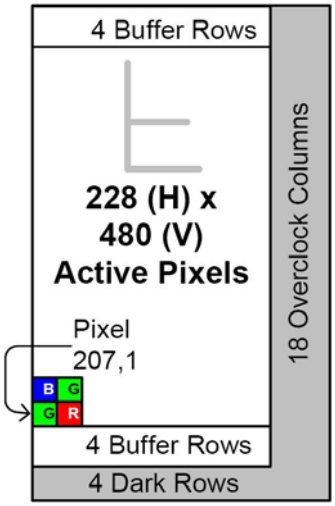

Figure 2.4 - Center Columns Output in Dual Mode of Operation

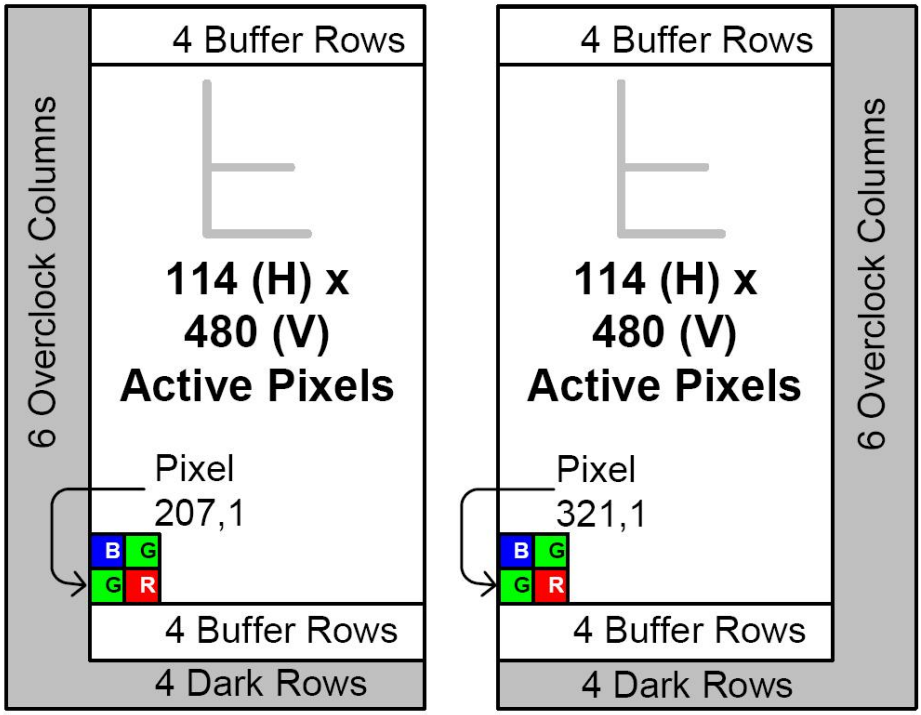

Figure 2.5 - Center Columns Output in Dual Tap Mode

2.1.4 Timing Diagrams

IPX-VGA120-L, IPX-VGA210-L/G

In the single mode each line consists of 12 empty pixels (E1 – E12), followed by 24 masked pixels used for black reference (R1 – R24), followed by 4 buffer pixels (B1 – B4), followed by 640 active data pixels (D1 – D640), followed by 4 buffer pixels (B1 – B4), and followed by another 24 masked dark pixels (R1 – R24) – Figure 2.6.. In dual mode each line consists of 12 empty pixels (E1 – E12), followed by 24 masked pixels used for black reference (R1 – R24), followed by 4 buffer pixels (B1 – B4), followed by 320 active data pixels – Figure 2.7. The data is sampled on the rising edge of the clock, and the LVAL (line valid) signal is active only during the active pixels. Each frame (for all modes) consists of 35.4 us vertical frame timing, followed by 4 masked dark lines (RL1 – RL4), followed by 4 buffer lines (BL1 – BL4), followed by 480 active lines (DL1 – DL480), and followed by 4 buffer lines (BL1 – BL4). During each frame the FVAL (frame valid) signal is active only during the active lines (DL1 – DL480) – Figure 2.8.

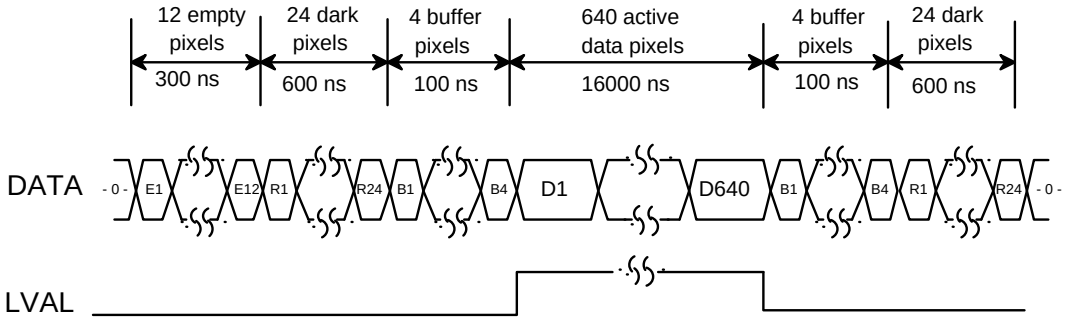

Figure 2.6 - Single Output Line Timing (IPX-VGA120/210-L and IPX-210-G)

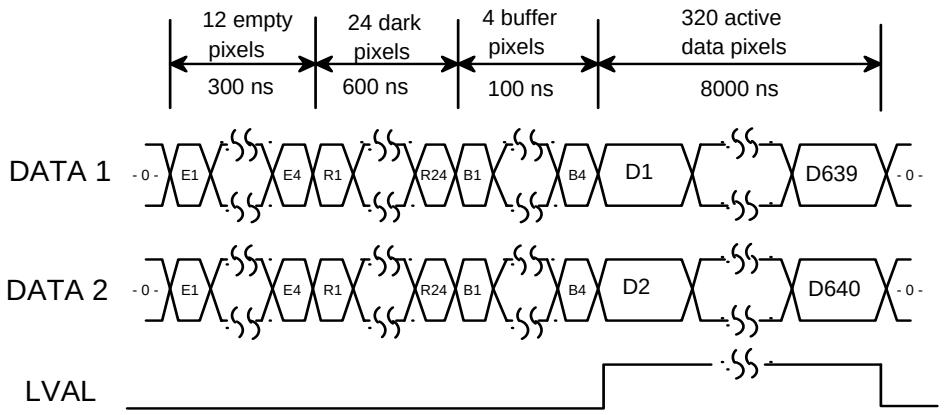

Figure 2.7 - Dual Output Line Timing (IPX-VGA210-L/G)

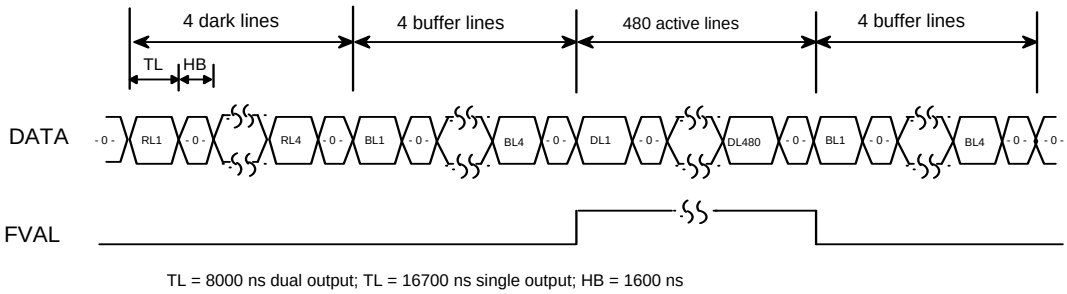

Figure 2.8 - Single / Dual (Center) Output Frame Timing (IPX-VGA210-L/G)

IPX-VGA120-L : T_L = 18.38 µs for single

IPX-VGA210-L/G : T_L = 9.7 µs for dual
T_L = 18.4 µs for single
T_L = 6.73 µs for single center
T_L = 3.6 µs for dual center

IPX-VGA210-L/G – Center Columns Operation

In the center columns single mode, each line consists of 228 active data pixels (D1 – D228), followed by 18 dark (over-clocked) pixels (R1 – R18) – Figure 2.9. In the center columns dual mode, each line consists of 6 masked (over-clocked) pixels (R1 – R6), followed by 114 active data pixels – Figure 2.10.

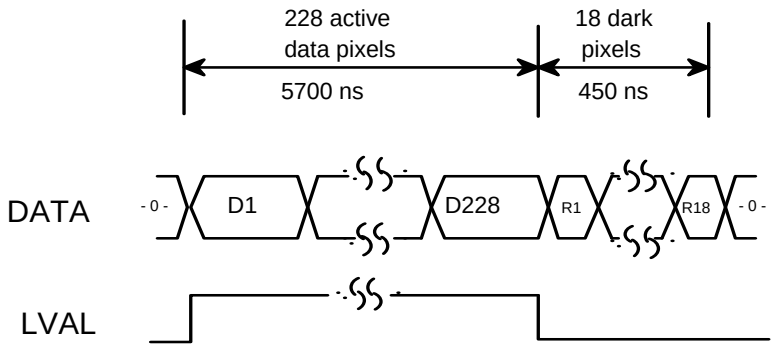

Figure 2.9 - Center Columns Single Output Line Timing (IPX-VGA210-L/G)

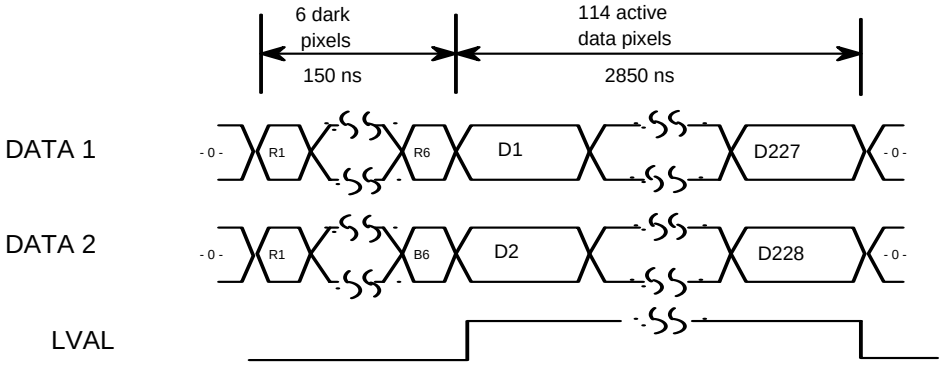

Figure 2.10 - Center Columns Dual Output Line Timing (IPX-VGA210-L/G)

IPX-1M48-L/G

In the single mode, each line consists of 8 empty pixels (E1 – E8), followed by 12 masked pixels used for black (dark) reference (R1 – R12), followed by 2 buffer pixels (B1, B2), followed by 1000 active pixels (D1 – D1000), followed by 2 buffer pixels (B1, B2), and followed by another 12 masked pixels (R1 – R12) – Figure 2.11. In the dual mode, each line consists of 8 empty pixels (E1 – E8), followed by 12 masked pixels used for black (dark) reference (R1 – R12), followed by 2 buffer pixels (B1, B2), and followed by 500 active pixels – Figure 2.12. The data is sampled on the rising edge of the clock, and the LVAL (line valid) signal is active only during the active pixels. Each frame (for all modes) consists of 61 us vertical frame timing, followed by 4 masked lines (RL1 – RL4), followed by 2 buffer lines (BL1, BL2), followed by 1000 active lines (DL1 – DL1000). During each frame the FVAL (frame valid) signal is active only during the active lines (DL1 – DL1000) – Figure 2.13.

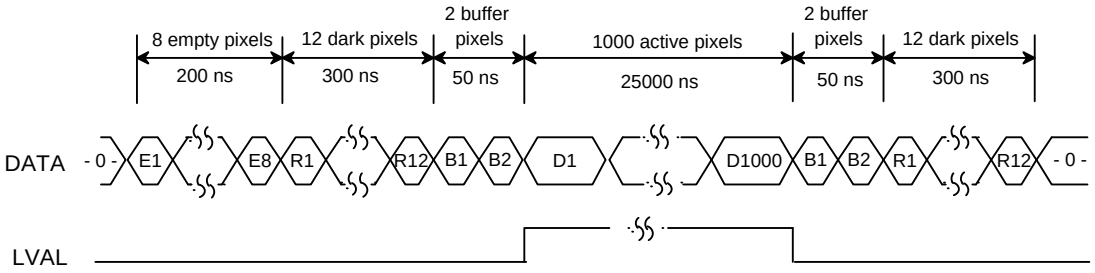

Figure 2.11 - Single Output Line Timing (IPX-1M48-L/G)

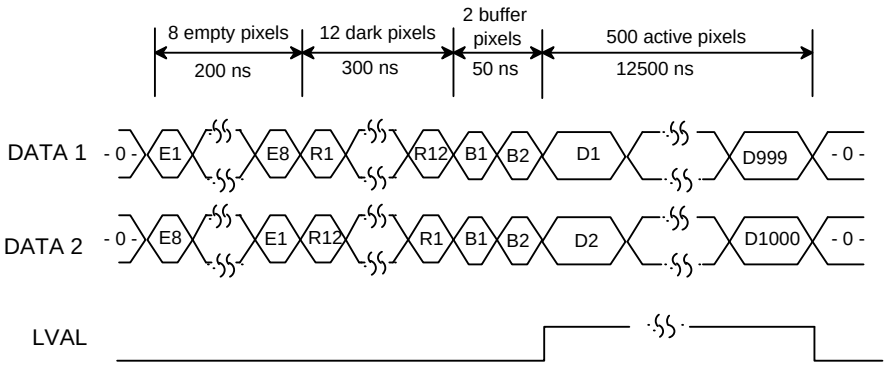

Figure 2.12 - Dual Output Line Timing (IPX-1M48-L/G)

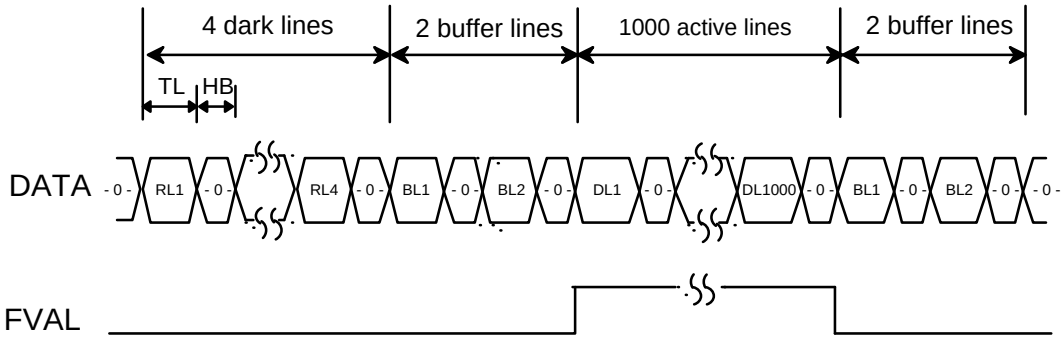

TL = 13050 ns dual output; TL = 25900 ns single output; HB = 7200 ns.

Figure 2.13 - Single / Dual Output Frame Timing (IPX-1M48-L/G)

IPX-2M30-L/G

In the single mode, each line consists of 4 empty pixels (E1 – E4), followed by 16 masked pixels used for black (dark) reference (R1 – R16), followed by 4 buffer pixels (B1 – B4), followed by 1600 active data pixels (D1 – D1600), followed by 4 buffer pixels (B1 – B4), and followed by another 16 masked dark pixels (R1 – R16) – Figure 2.14. In the dual mode, each line consists of 4 empty pixels (E1 – E4), followed by 16 masked pixels used for black (dark) reference (R1 – R16), followed by 4 buffer pixels (B1 – B4), followed by 800 active data pixels – Figure 2.15. The data is sampled on the rising edge of the clock, and the LVAL (line valid) signal is active only during the active pixels. Each frame consists of 82 us vertical frame timing for single mode (62 us for dual mode) followed by 2 masked dark lines (RL1, RL2), followed by 4 buffer lines (BL1 – BL4), followed by 1200 active lines (DL1 – DL1200), followed by 4 buffer lines (BL1 – BL4), and followed by another 4 masked dark lines (RL1 – RL4). During each frame the FVAL (frame valid) signal is active only during the active lines (DL1 – DL1200) – Figure 2.16.

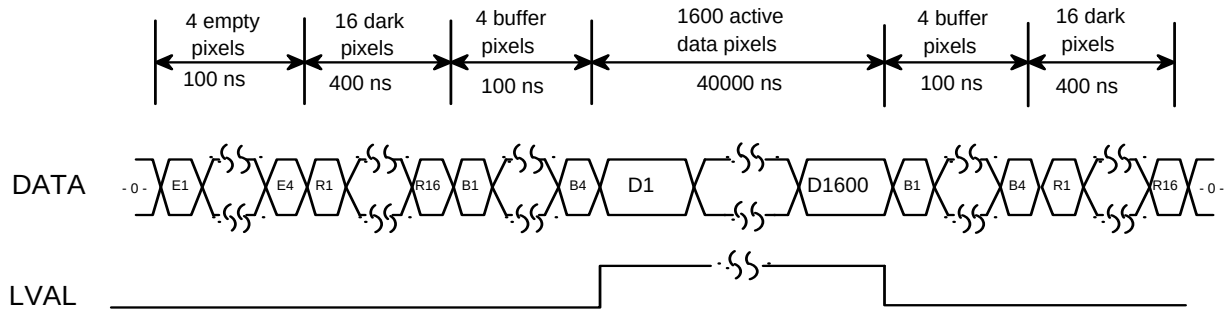

Figure 2.14 - Single output line timing (IPX-2M30-L/G)

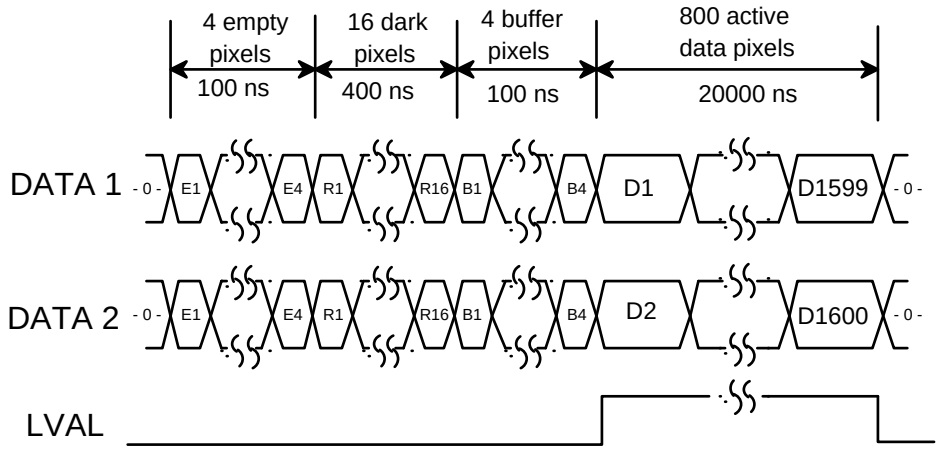

Figure 2.15 - Dual output line timing (IPX-2M30-L/G)

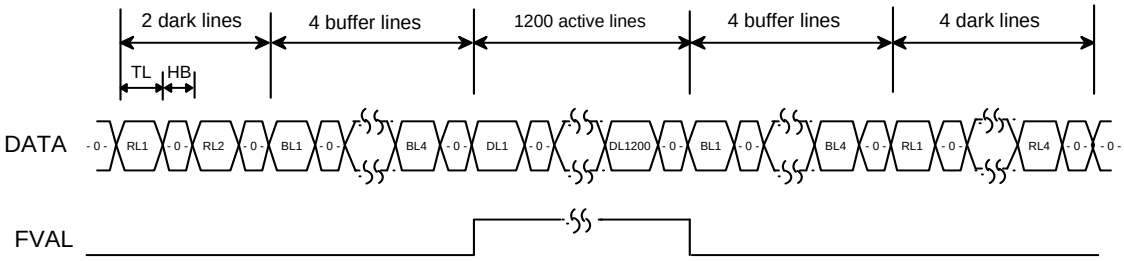

TL = 20600 ns dual output; TL = 41100 ns single output; HB = 4000 ns

Figure 2.16 - Single / Dual Output Frame Timing (IPX-2M30-L/G)

IPX-2M30H-L/G

In the single mode, each line consists of 4 empty pixels (E1 – E4), followed by 28 masked pixels used for black (dark) reference (R1 – R28), followed by 4 buffer pixels (B1 – B4), followed by 1920 active data pixels (D1 – D1920), followed by 4 buffer pixels (B1 – B4), and followed by another 28 masked dark pixels (R1 – R28) – Figure 2.17. In the dual mode, each line consists of 4 empty pixels (E1 – E4), followed by 28 masked pixels used for black (dark) reference (R1 – R28), followed by 4 buffer pixels (B1 – B4), followed by 960 active data pixels (D1 – D960) – Figure 2.18. The data is sampled on the rising edge of the clock, and the LVAL (line valid) signal is active only during the active pixels. Each frame consists of 90.6 us vertical frame timing for single mode (65.9 us for dual mode), followed by 4 masked dark lines (RL1 – RL4), followed by 2 buffer lines (BL1, BL2), followed by 1080 active lines (DL1 – DL1080), followed by 2 buffer lines (BL1, BL2), and followed by another 4 masked dark lines (RL1 – RL4). During each frame the FVAL (frame valid) signal is active only during the active lines (DL1 – DL1080) – Figure 2.19.

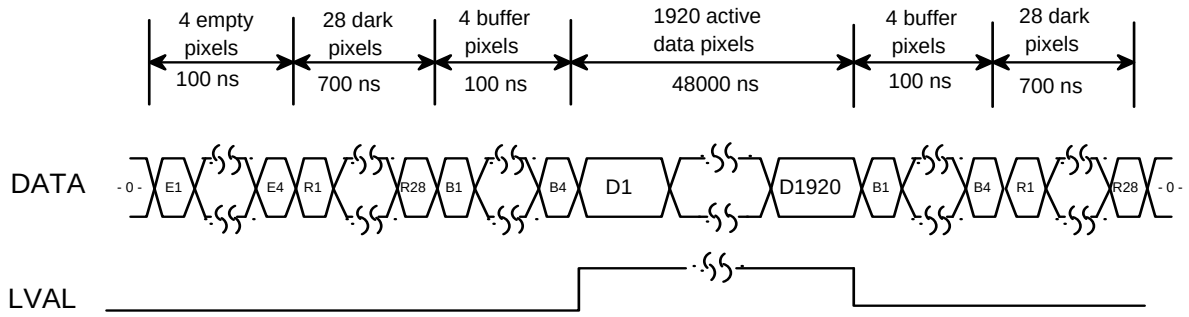

Figure 2.17 - Single Output Line Timing (IPX-2M30H-L/G)

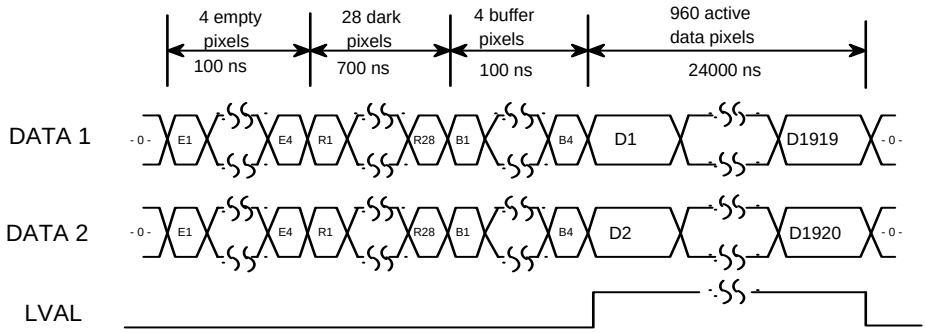

Figure 2.18 - Dual Output Line Timing (IPX-2M30H-L/G)

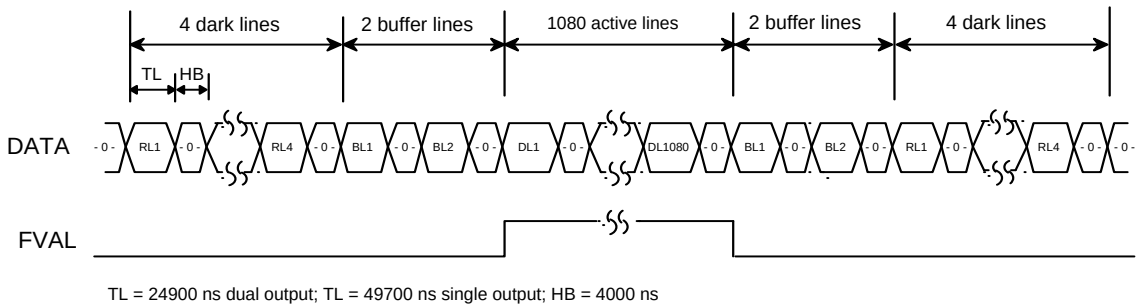

Figure 2.19 - Single / Dual Output Frame Timing (IPX-2M30H-L/G)

IPX-4M15-L/G

In single mode, each line consists of 12 empty pixels (E1 – E12), followed by 28 masked pixels used for black (dark) reference (R1 – R28), followed by 4 buffer pixels (B1 – B4), followed by 2048 active data pixels (D1 – D2048), followed by 4 buffer pixels (B1 – B4), and followed by another 28 masked dark pixels (R1 – R28) – Figure 2.20. In the dual mode, each line consists of 12 empty pixels (E1 – E12), followed by 28 masked pixels used for black (dark) reference (R1 – R28), followed by 4 buffer pixels (B1 – B4), followed by 1024 active data pixels – Figure 2.21. The data is sampled on the rising edge of the clock, and the LVAL (line valid) signal is active only during the active pixels. Each frame consists of 122.1 us vertical frame timing for single mode (95.7 us for dual mode), followed by 10 masked dark lines (RL1 – RL10), followed by 6 buffer lines (BL1 – BL6), followed by 2048 active lines (DL1 – DL2048), and followed by 8 buffer lines (BL1 – BL8). During each frame the FVAL (frame valid) signal is active only during the active lines (DL1 – DL2048) – Figure 2.22.

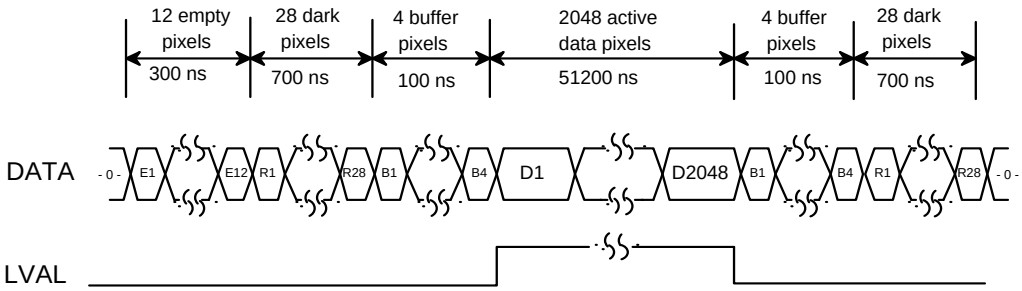

Figure 2.20 - Single Output Line Timing (IPX-4M15-L/G)

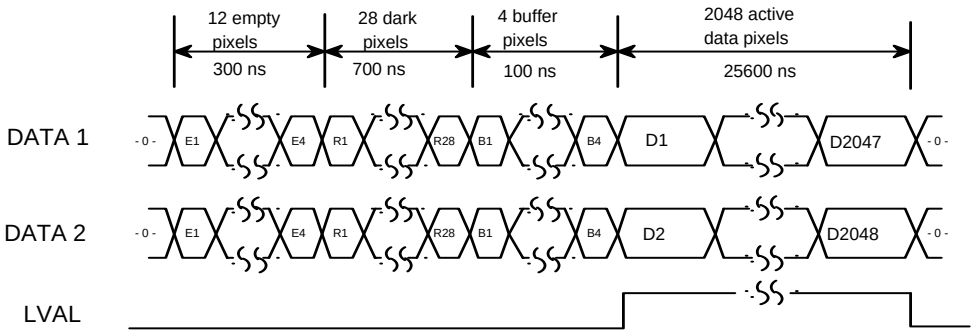

Figure 2.21 - Dual Output Line Timing (IPX-4M15-L/G)

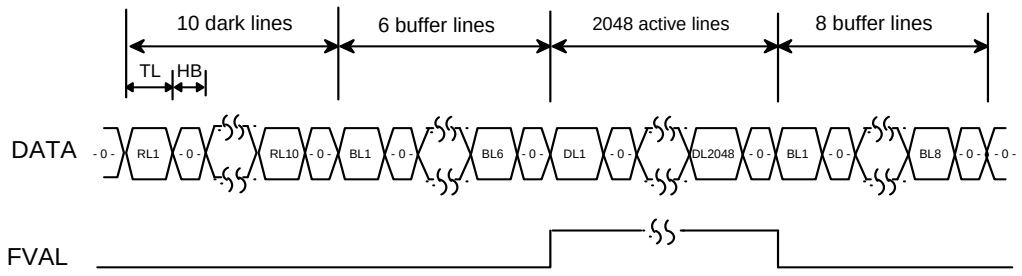

TL = 26700 ns dual output; TL = 53100 ns single output; HB = 4000 ns

Figure 2.22 - Single / Dual Output Frame Timing (IPX-4M15-L/G)

IPX-11M5-L/G

In the single mode, each line consists of 4 empty pixels (E1 – E4), followed by 20 masked pixels used for black reference (R1 – R20), followed by 16 buffer pixels (B1 – B16), followed by 4000 active data pixels (D1 – D4000), followed by 16 buffer pixels (B1 – B16), and followed by another 20 masked dark pixels (R1 – R20) – Figure 2.23 In the dual mode, each line consists of 4 empty pixels (E1 – E4), followed by 20 masked pixels used for black reference (R1 – R20), followed by 16 buffer pixels (B1 – B16), followed by 2000 active data pixels – Figure 2.24. The data is sampled on the rising edge of the clock, and the LVAL (line valid) signal is active only during the active pixels. Each frame consists of 282 us vertical frame timing for single mode (206 us for dual mode), followed by 16 masked dark lines (RL1 – RL16), followed by 8 buffer lines (BL1 – BL8), followed by 2672 active lines (DL1 – DL2672), and followed by 8 buffer lines (BL1 – BL8), and followed by 16 masked dark lines (RL1 – RL16). During each frame the FVAL signal is active only during the active lines (DL1 – DL2672) – Figure 2.25.

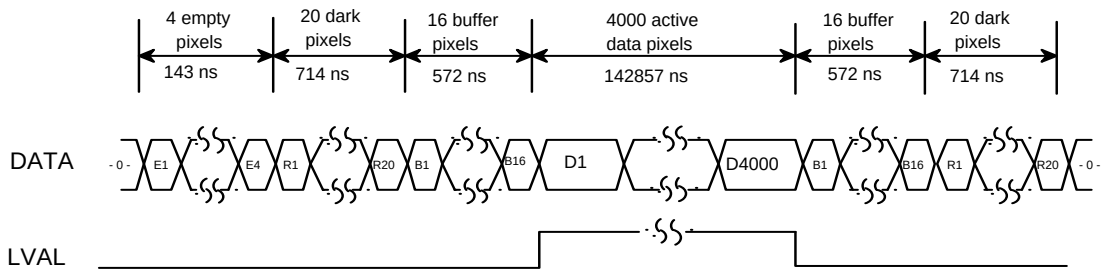

Figure 2.23 - Single Output Line Timing (IPX-11M5-L/G)

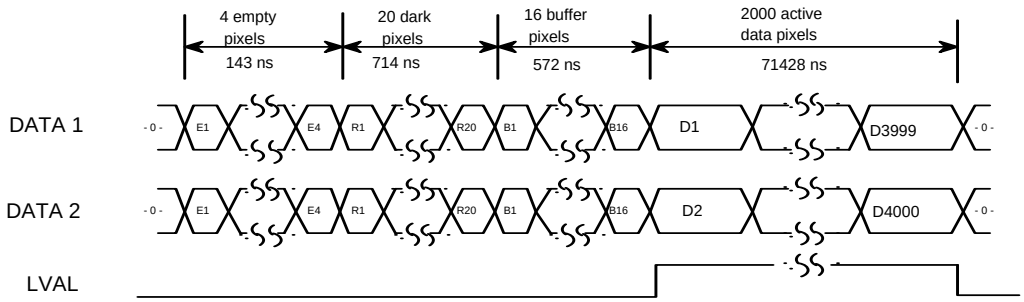

Figure 2.24 - Dual Output Line Timing (IPX-11M5-L/G)

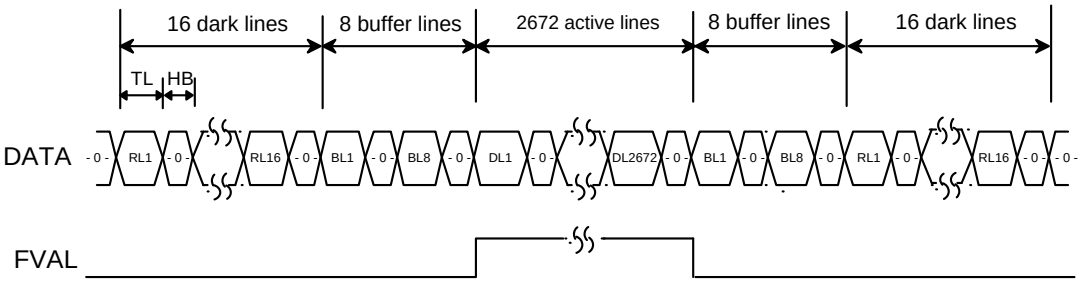

TL = 145571 nssingle output; TL = 72857 ns single output; HB = 7142 ns

Figure 2.25 - Single / Dual Output Frame Timing (IPX-11M5-L/G)

IPX-16M3-L/G

In the single mode, each line consists of 16 empty pixels (E1 – E16), followed by 28 masked pixels used for black reference (R1 – R28), followed by 16 buffer pixels (B1 – B16), followed by 4872 active data pixels (D1 – D4872), followed by 16 buffer pixels (B1 – B16), and followed by another 28 masked dark pixels (R1 – R28) – Figure 2.26 In the dual mode, each line consists of 13 empty pixels (E1 – E13), followed by 28 masked pixels used for black reference (R1 – R28), followed by 16 buffer pixels (B1 – B16), followed by 2436 active data pixels – Figure 2.27. The data is sampled on the rising edge of the clock, and the LVAL (line valid) signal is active only during the active pixels. Each frame consists of ? us vertical frame timing for single mode (? us for dual mode), followed by 40 masked dark lines (RL1 – RL40), followed by 16 buffer lines (BL1 – BL16), followed by 3248 active lines (DL1 – DL3248), and followed by 16 buffer lines (BL1 – BL16), and followed by 4 masked dark lines (RL1 – RL4). During each frame the FVAL signal is active only during the active lines (DL1 – DL3248) – Figure 2.28.

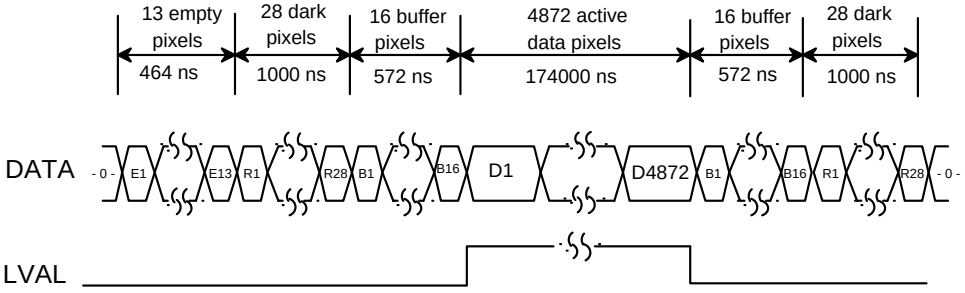

Figure 2.26 - Single Output Line Timing (IPX-16M3-L/G)

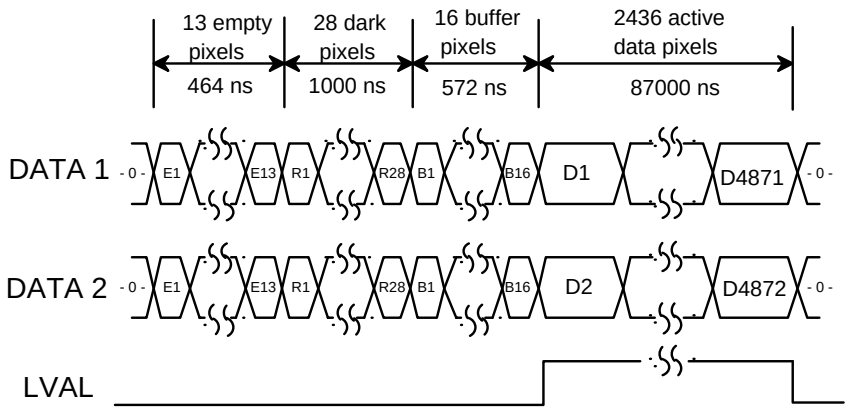

Figure 2.27 - Dual Output Line Timing (IPX-16M3-L/G)

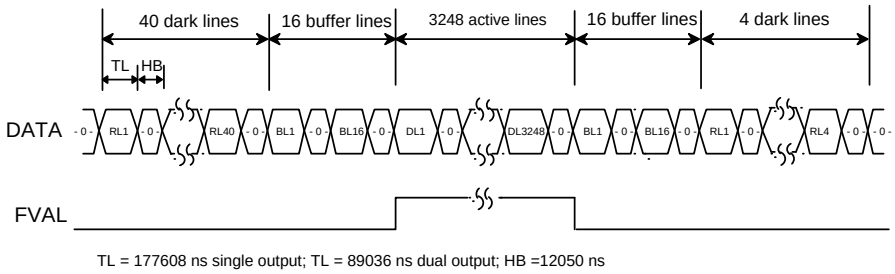

Figure 2.28 - Single / Dual Output Frame Timing (IPX-16M3-L/G)

2.2 AREA OF INTEREST

2.2.1 Horizontal and Vertical Window

Horizontal and vertical windowing (Area Of Interest) is supported in all LYNX cameras. Emphasizing a particular area of interest in horizontal direction is possible by using a horizontal window feature, where the beginning part of each line (pixel 1 to 'Start Pixel') and the end of each line ('End Pixel' to Last pixel) are ignored – Figure 2.29. The precision of each pointer (beginning and end of the window) is 1 pixel, and can be placed in the entire image area – refer to the camera configuration section. The minimum window size is one pixel for single mode (or 2 pixels for dual mode), and the maximum window size is the full resolution (Last H pixel). Table 2.2 shows the allowable values for the 'Start Pixel' and the 'End Pixel'.

Emphasizing a particular area of interest in vertical direction is possible by using a vertical window feature. Vertical windowing is used for increasing the frame rates. For example, by skipping half of the lines, the image will be sub-windowed by a factor of 2 and the frame rate will almost double. The vertical window beginning (Start Line) and (End Line) can be programmed with a precision of one line – Figure 2.29. The minimum window size depends on the camera (Table 2.2), the maximum is full vertical resolution (Last V line). Table 2.2 shows the allowable values for the 'Start Line' and the 'End Line'.

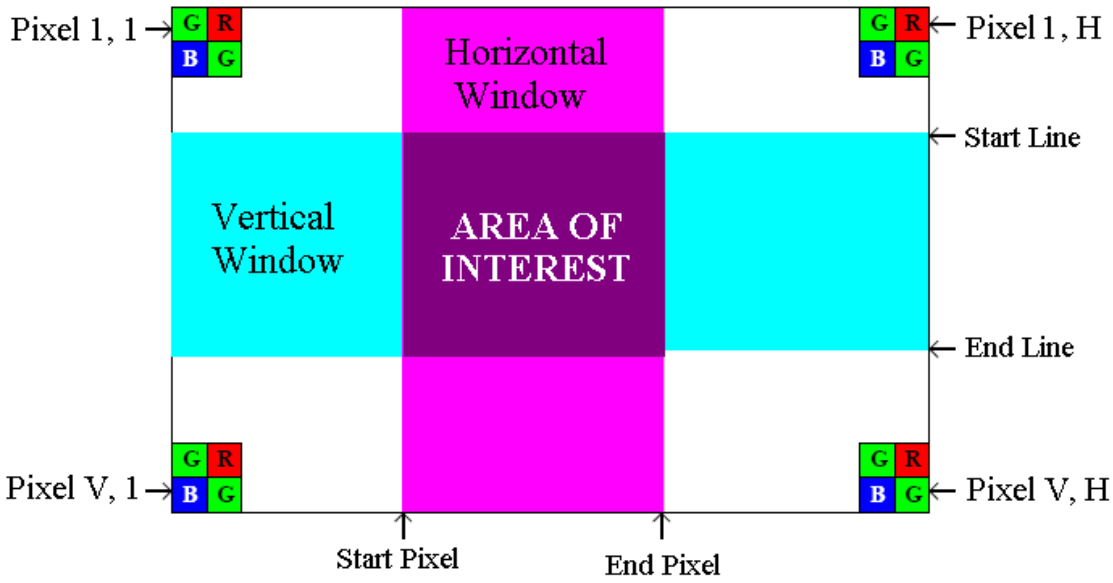

Figure 2.29 - Horizontal and Vertical Window Positioning

Feature	IPX-VGA210-L	IPX-1M48-L	IPX-2M30-L	IPX-2M30H-L	IPX-4M15-L	IPX-11M5-L	IPX-16M3-L
Start Pixel - Min.	1	1	1	1	1	1	1
Start Pixel - Max.	639	999	1599	1919	2047	3999	4871
End Pixel - Min.	2	2	2	2	2	2	2
End Pixel - Max.	640	1000	1600	1920	2048	4000	4872
Last H Pixel	640	1000	1600	1920	2048	4000	4872
Minimum HW size	2	2	2	2	2	2	2
Start Line - Min.	1	1	1	N/A	1	1	1
Start Line - Max.	479	999	1199	N/A	2047	2671	3247
End Line - Min.	2	2	2	N/A	2	2	2
End Line - Max.	480	1000	1200	N/A	2048	2672	3248
Last V Line	480	1000	1200	N/A	2048	2672	3248
Recommended Minimum VW size	>10	>2	>50	N/A	>100	>400	>400

Table 2.2 - Allowable Horizontal and Window Sizes

CAUTION NOTE

1. Horizontal and vertical windows can be enabled in all camera modes.
2. The size of the horizontal window does not affect the frame rate.
3. The frame-grabber horizontal and vertical resolutions must be adjusted for each window size.
   a. The horizontal resolution is equal to the window size, which is: 'End Pixel' - 'Start Pixel' + 1.
   b. The vertical resolution is equal to the window size which is: 'End Line' - 'Start Line' + 1
4. Positioning the horizontal window outside the image window will result in an error.
5. Color version users – for proper color reconstruction 'Start pixel' and 'Start Line' must be an odd number.
6. Vertical window feature is not available in IPX-2M30H-L

2.2.2 Calculating the Frame Rate using Vertical Window

The resulting frame rate (FR) for each camera can be approximately calculated using formulas 2.1a – 2.1f, where WS is the window size. The window size is the number of lines in the window (WS = 'End Line' – 'Start Line' + 1). Figure 2.30 – 2.36 show a graphical representation of the formulas.

IPX-VGA120-L

$$FR\ [fps] = 1 / [(0.70 \times 10^{-6} \times (492 - WS)) + T_{VT} + (WS \times T_L)] \qquad (2.1a)$$

T_{VT} is a constant = 35.35 x 10^{-6} sec., and T_L is the active line duration (T_L = 18.38 x 10^{-6} sec).

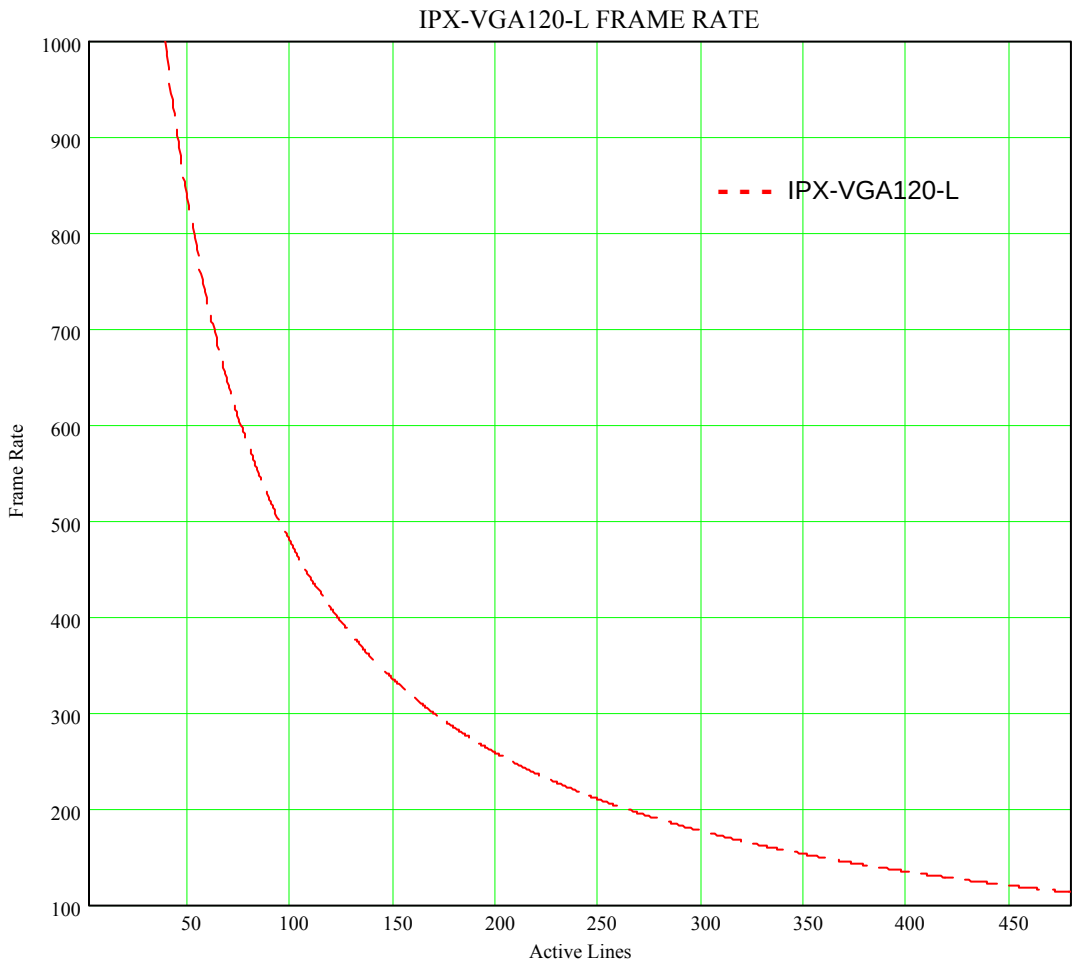

Figure 2.30 - Frame Rate vs. Vertical Window Size (IPX-VGA120-L)

IPX-VGA210-L/G

$$FR\ [fps] = 1 / [(0.70 \times 10^{-6} \times (492 - WS)) + T_{VT} + (WS \times T_L)] \qquad (2.1b)$$

T_{VT} is a constant ($T_{VT} = 35.35 \times 10^{-6}$ for single and dual mode), and T_L is the active line duration ($T_L = 18.38 \times 10^{-6}$ for single mode, $T_L = 9.7 \times 10^{-6}$ for dual mode, $T_L = 6.73 \times 10^{-6}$ for single mode center, and $T_L = 3.6 \times 10^{-6}$ for dual mode center).

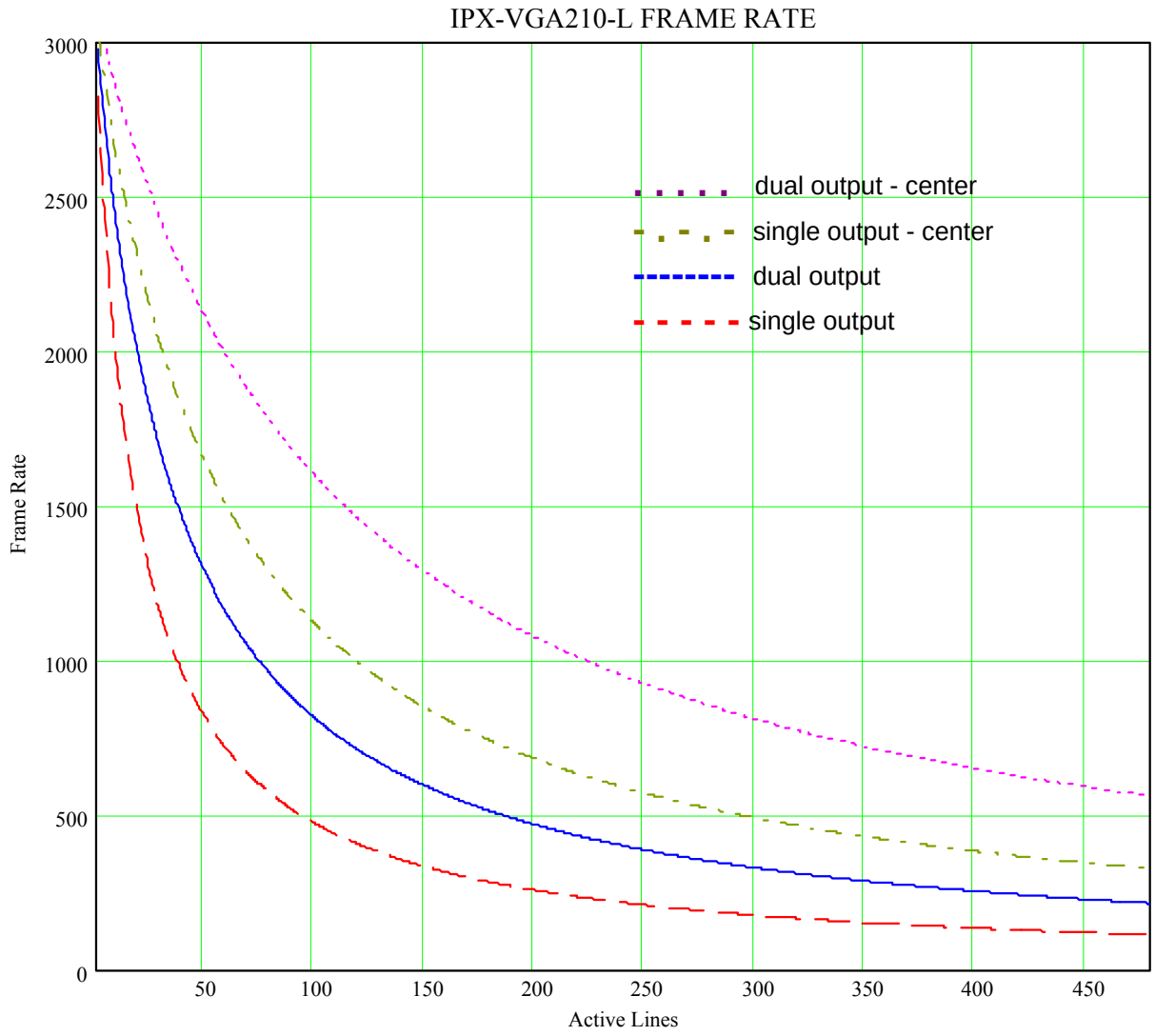

Figure 2.31 - Frame Rate vs. Vertical Window Size (IPX-VGA210-L/G)

IPX-1M48-L/G

$$FR\ [fps] = 1 / [(7.2 \times 10^{-6} \times (1010 - WS)) + T_{VT} + (WS \times T_L)] \qquad (2.1c)$$

T_{VT} is a constant ($T_{VT} = 60.90 \times 10^{-6}$ for single and dual mode), and T_L is the active line duration ($T_L = 33.1 \times 10^{-6}$ for single mode, and $T_L = 20.3 \times 10^{-6}$ for dual mode).

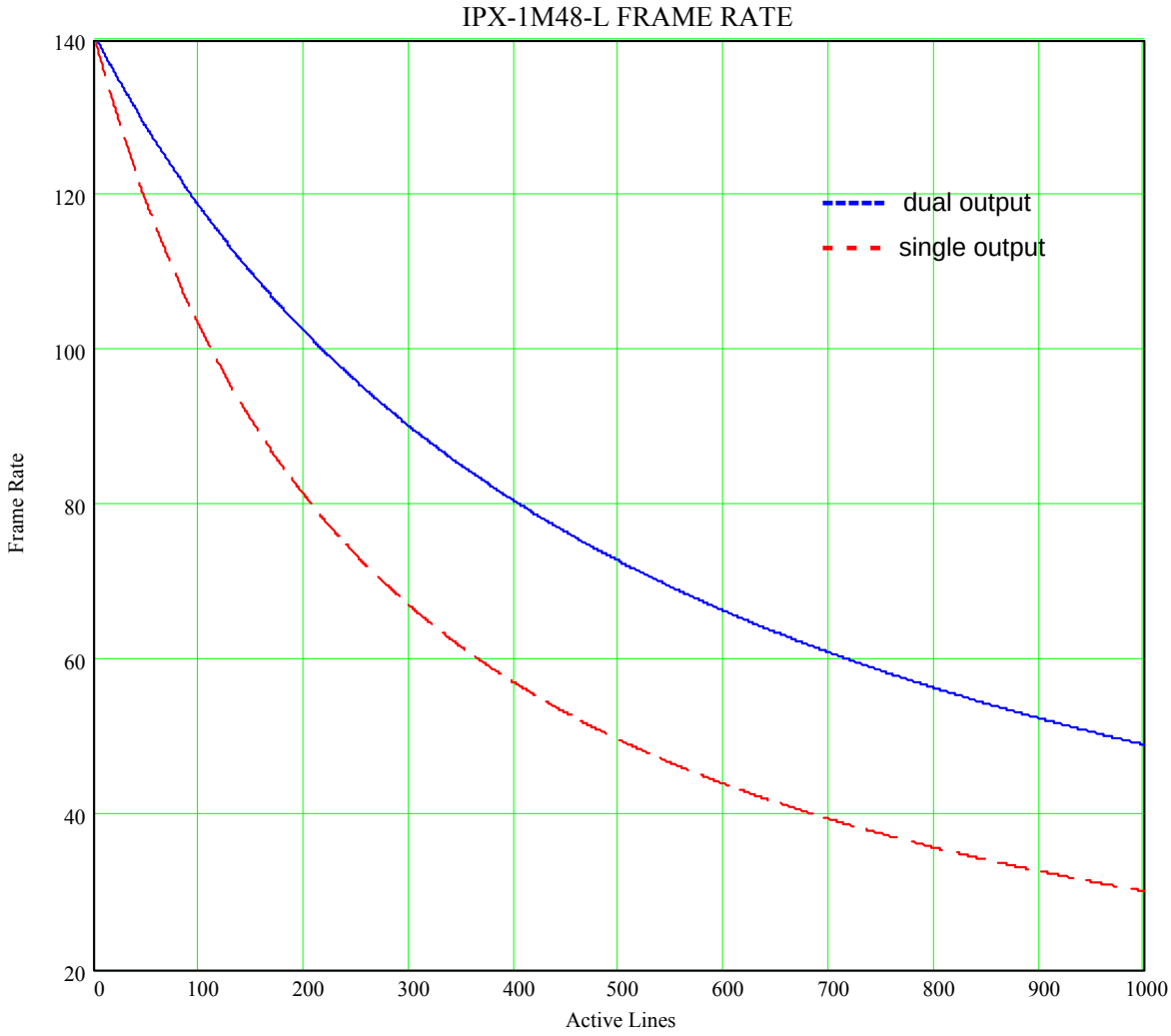

Figure 2.32 - Frame Rate vs. Vertical Window Size (IPX-1M48-L/G)

IPX-2M30-L/G

$$FR\ [fps] = 1 / [(4.00 \times 10^{-6} \times (1214 - WS)) + T_{VT} + (WS \times T_L)] \qquad (2.1d)$$

T_{VT} is a constant ($T_{VT} = 82 \times 10^{-6}$ for single mode, and $T_{VT} = 62 \times 10^{-6}$ for dual mode), and T_L is the active line duration ($T_L = 45.18 \times 10^{-6}$ for single mode, and $T_L = 24.7 \times 10^{-6}$ for dual mode).

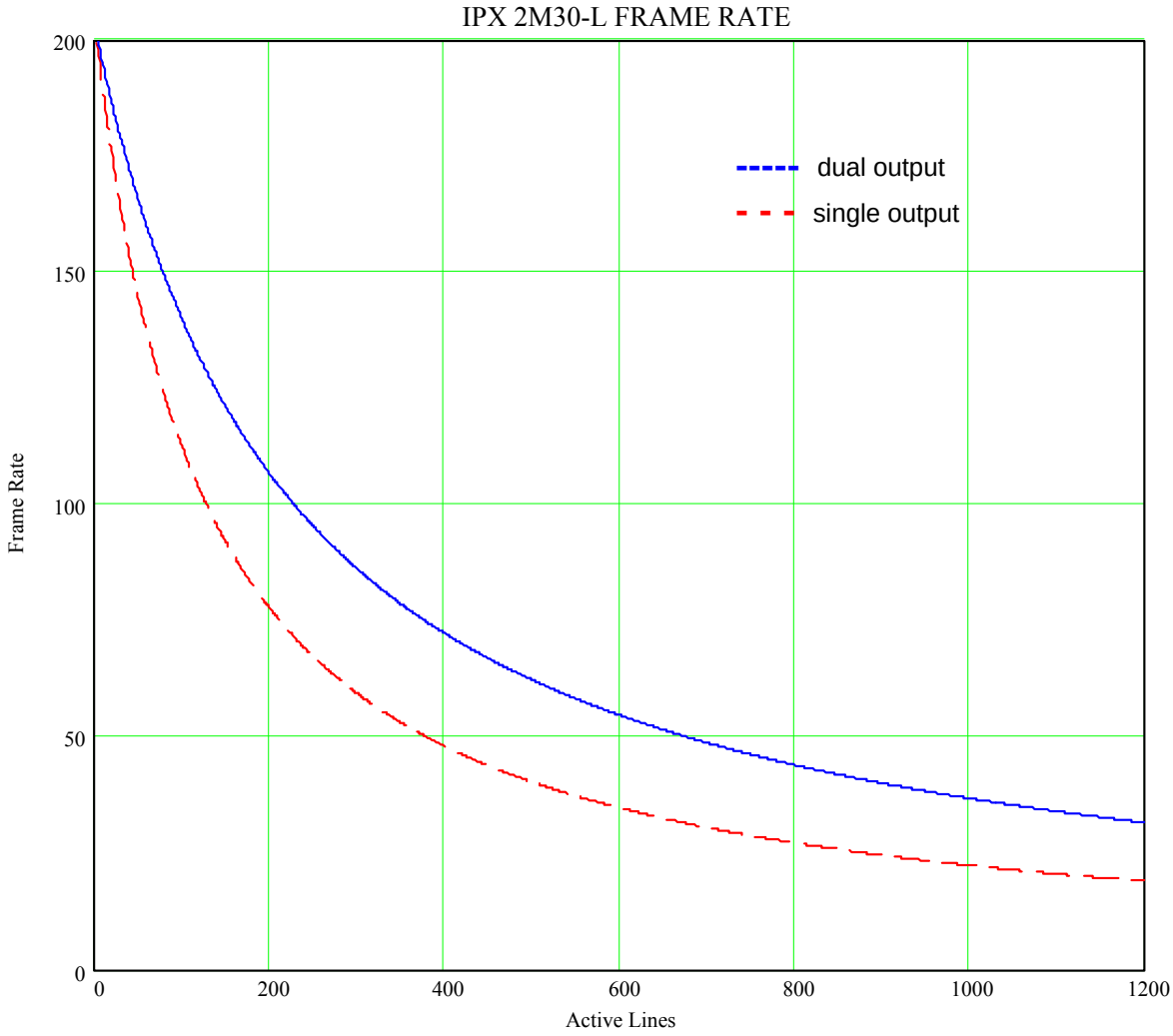

Figure 2.33 - Frame Rate vs. Vertical Window Size (IPX-2M30-L/G)

IPX-4M15-L/G

$$FR\ [fps] = 1 / [(4.00 \times 10^{-6} \times (2072 - WS)) + T_{VT} + (WS \times T_L)] \quad (2.1e)$$

T_{VT} is a constant ($T_{VT} = 122.1 \times 10^{-6}$ for single mode, and $T_{VT} = 95.7 \times 10^{-6}$ for dual mode), and T_L is the active line duration ($T_L = 57.38 \times 10^{-3}$ for single mode, and $T_L = 30.8 \times 10^{-3}$ for dual mode).

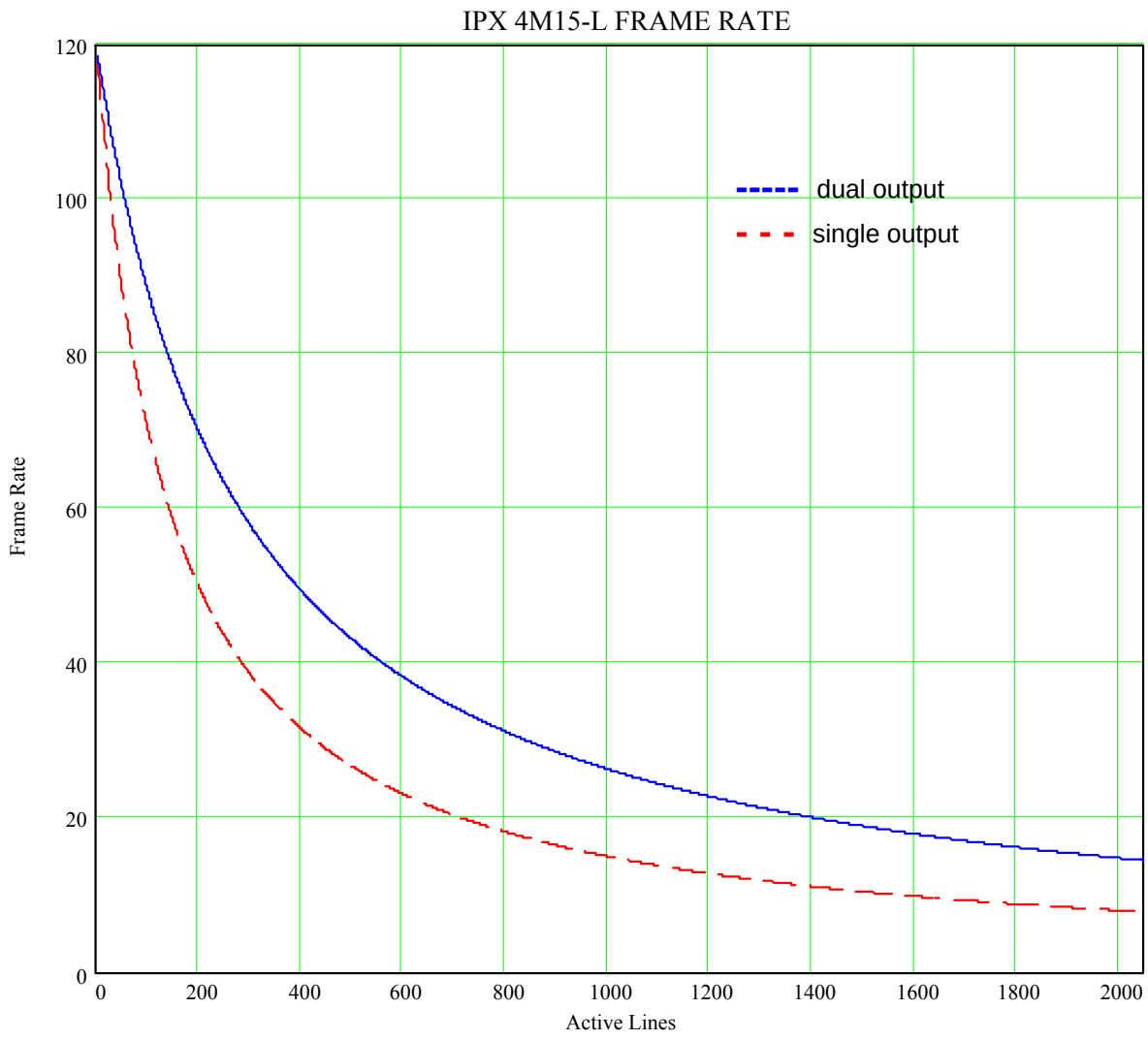

Figure 2.34 - Frame Rate vs. Vertical Window Size (IPX-4M15-L/G)

IPX-11M5-L/G

$$FR\ [fps] = 1 / [(10.50 \times 10^{-6} \times (2720 - WS)) + T_{VT} + (WS \times T_L)] \quad (2.1f)$$

T_{VT} is a constant ($T_{VT} = 282.14 \times 10^{-6}$ for single mode, and $T_{VT} = 206.07 \times 10^{-6}$ for dual mode), and T_L is the active line duration ($T_L = 152.82 \times 10^{-6}$ for single mode, and $T_L = 80.14 \times 10^{-6}$ for dual mode).

Note: The minimum vertical window size for the IPX-11M5 is 400 lines. If you require support for less than 400 lines then please contact Imperx.

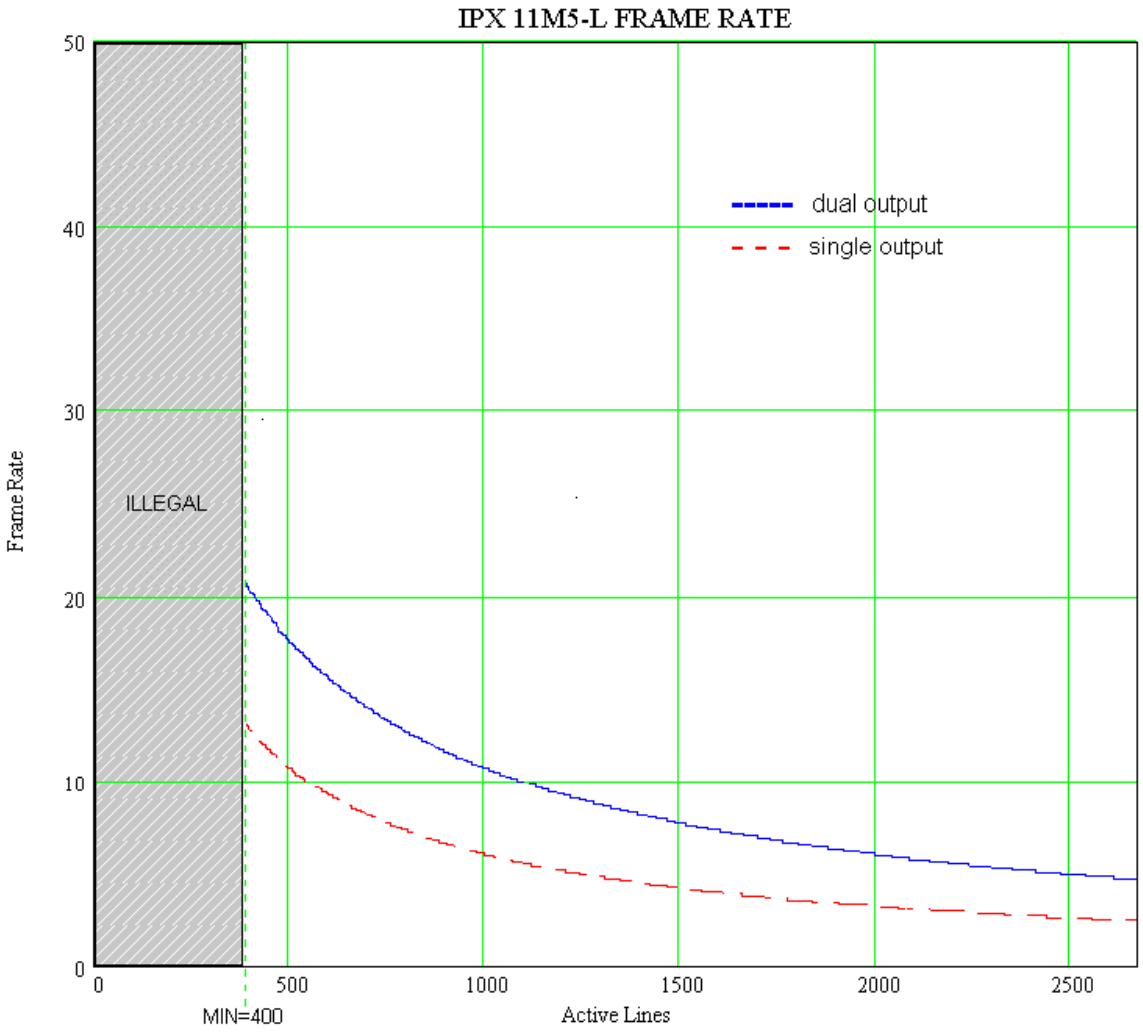

Figure 2.35 - Frame Rate vs. Vertical Window Size (IPX-11M5-L/G)

IPX-16M3-L/G

$$FR\ [fps] = 1 / [(1.20 \times 10^{-5} \times (3324 - WS)) + T_{VT} + (WS \times T_L)] \quad (2.1g)$$

T_{VT} is a constant ($T_{VT} = 6.952 \times 10^{-4}$ for single and dual modes), and T_L is the active line duration ($T_L = 1.901 \times 10^{-4}$ for single and $T_L = 1.012 \times 10^{-4}$ for dual mode).

Note: The minimum vertical window size for the IPX-16M3 is 400 lines. If you require support for less than 400 lines then please contact Imperx.

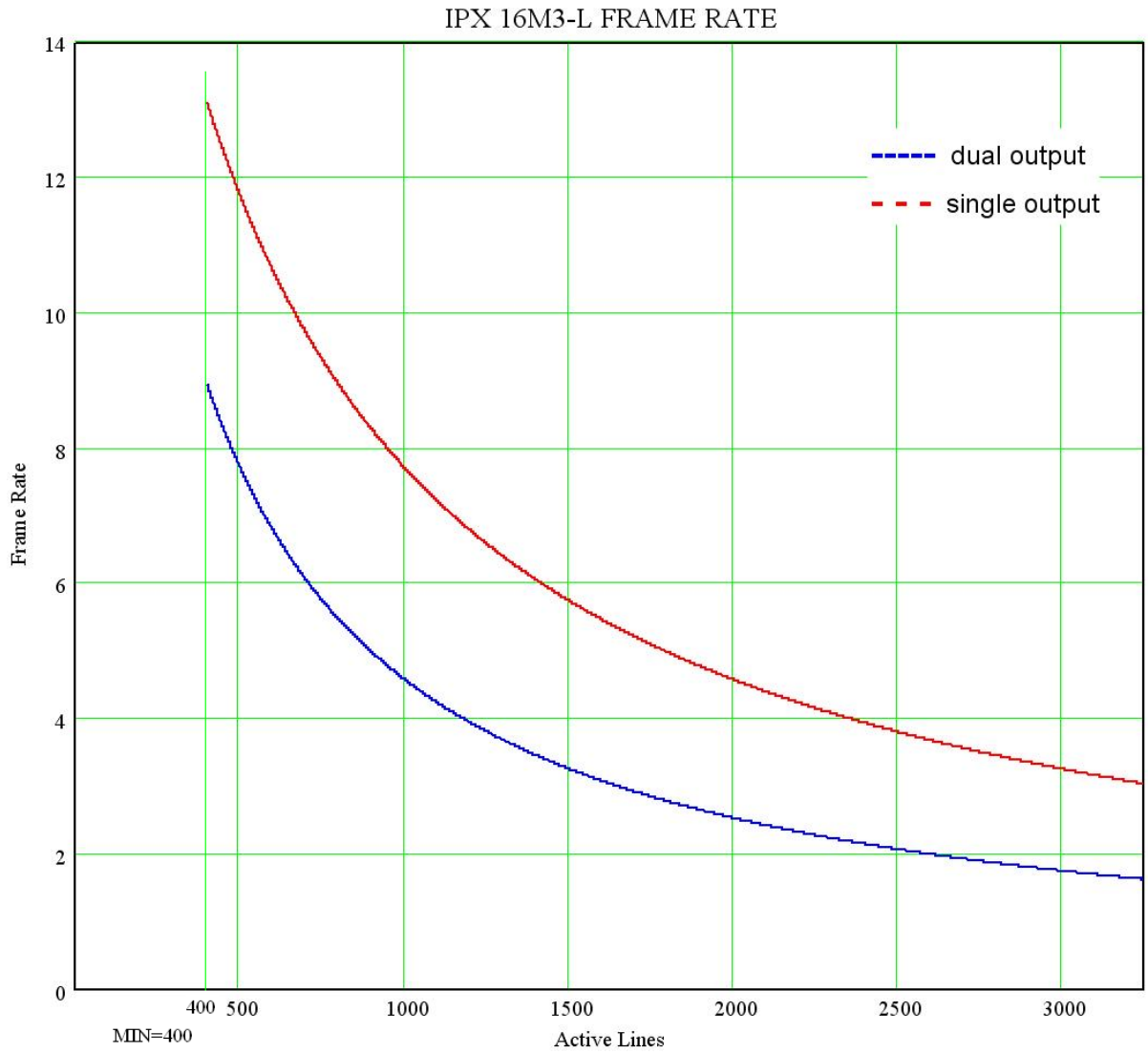

Figure 2.36 - Frame Rate vs. Vertical Window Size (IPX-16M3-L/G)

2.3 BINNING

Binning uses the CCD sensor to combine adjacent pixels in both directions to effectively create larger pixels and less resolution. In 2:1 horizontal binning mode, two adjacent pixels in each line are summed together (in the horizontal direction), for example, pixels 1+2, 3+4, 5+6, … in each line are summed together. Horizontal binning does not affect the frame rate. It does, however, reduce the horizontal resolution by a factor of 2. This occurs because when binning two pixels together, only half of the pixels per line remain. Horizontal binning is equivalent to 2:1 sub-sampling in the horizontal direction. In horizontal binning mode, the entire image is captured and displayed, which is different than horizontal windowing, where only a portion of the image is captured and displayed.

Vertical binning 2:1 is a readout mode of progressive scan CCD image sensors where two image lines are clocked simultaneously into the horizontal CCD register before being read out. This results in summing the charges of adjacent pixels (in the vertical direction) from two lines. For example, the corresponding pixels in lines 1+2, 3+4, 5+6, … are summed together. Vertical binning reduces the vertical resolution by a factor of 2, and almost doubles the frame rate. This occurs because when binning two lines together, only half of the lines need to be read out. Vertical binning is equivalent to 2:1 sub-sampling in the vertical direction. In vertical binning the entire image is captured and displayed, which is different than vertical windowing, where only a portion of the image is captured and displayed. If horizontal and vertical binning are used simultaneously the image is sub-sampled by 4 and the aspect ratio is preserved.

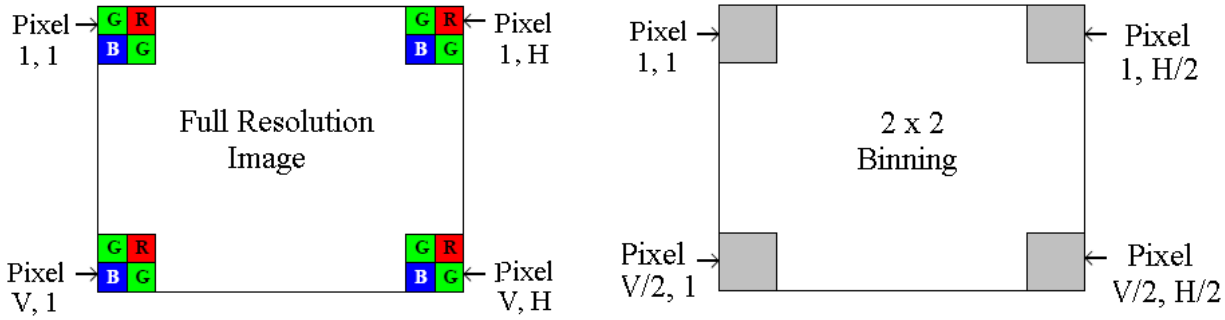

Figure 2.37 - Horizontal and Vertical Binning

CAUTION NOTE

1. Horizontal or vertical binning used alone changes the aspect ratio of the image in the vertical or horizontal direction. To correct this, use horizontal and vertical binning simultaneously.
2. The frame-grabber vertical and horizontal resolution should be changed to reflect the actual number of active pixels and lines.
3. Vertical binning in single output mode of operation may cause blooming for saturated signal levels.
4. Color version users – horizontal or vertical binning used alone will create color distortions. If used simultaneously, the resulting image will be monochrome.

2.4 EXPOSURE CONTROL

2.4.1 Electronic Shutter

During normal camera operation, the exposure time is fixed and determined by the frame rate. The electronic shutter can be used to precisely control the image exposure time under bright light conditions. The electronic shutter does not affect the frame rate, it only reduces the amount of electrons collected. The desired exposure time is set by positioning a short pulse, SHUTTER, with respect to the vertical transfer pulse, VCCD – Figure 2.38. The electronic shutter pulse can be positioned within the entire frame timing period with a precision of 10 microseconds - refer to the 'sst' command. The minimum shutter position is 50 microseconds.

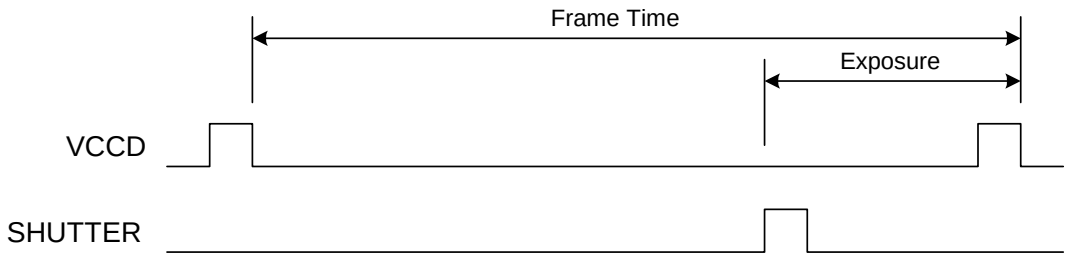

Figure 2.38 - Electronic Shutter Position

CAUTION NOTE

1. The electronic shutter can be enabled in all camera modes.
2. Positioning the shutter signal outside the frame window will result in an error.

2.4.2 Variable Frame Rate – Programmable Integration

Variable frame rate mode provides the ability to run the camera in full resolution and a frame rate slower than the nominal camera frame rate – refer to Table 2.1. This has two effects: 1) it reduces the bandwidth requirements on the Camera Link interface and 2) it increases the exposure time for the frame. During normal camera operation, the nominal frame rate determines the integration time. The desired frame rate, and thus the new integration time, can be achieved by moving the vertical transfer pulse, VCCD, beyond the normal integration period (the standard frame time) – Figure 2.39. The resultant frame rate can be calculated using formula 4.1. The user can program

the camera frame rate from 2 fps (0.5 s integration time) up to the nominal camera speed – refer to Table 2.1, with a precision of 1.0 fps. Optionally, the user can enter the desired frame rate in units of time instead of units of fps. When the user the desired frame rate, the camera will calculate the corresponding integration time. Refer to the 'sfr' and 'sft' commands for setting the frame rate and frame time, respectively. Refer to the 'gce' command for retrieving the resultant exposure time. Note that the user can reduce the exposure time by using the shutter feature – refer to the 'sst' command.

$$\text{Frame rate [fps]} = 1 / \text{integration time [sec]} \qquad (4.1)$$

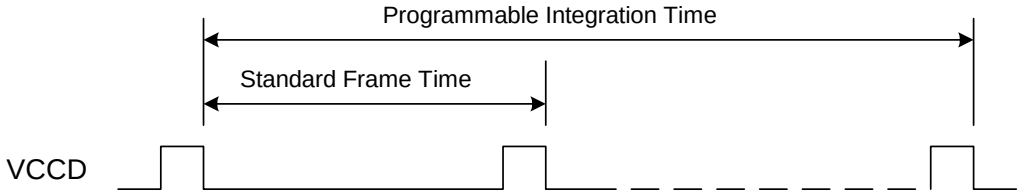

Figure 2.39 – Programmable Frame Rate

CAUTION NOTE

1. The maximum frame rate (and minimum frame time) is determined by the camera mode of operation. If the user enters a higher frame rate than the allowed one, the image will roll. Make sure the camera always operates with the frame rate lower than the maximum allowed.
2. Programmable Frame Rate/Time cannot be enabled in Trigger mode.
3. Programmable Frame Rate/Time cannot be enabled in Long Integration mode.

2.4.3 Long Integration

Long integration is used for extending the image exposure time beyond the standard frame time. During normal camera operation, the minimum frame rate determines the maximum exposure time. The desired exposure time can be adjusted (increased) by moving the vertical transfer pulse, VCCD, beyond the normal exposure range – Figure 2.40. This mode is very similar to the variable frame rate mode except that in this mode, the shutter cannot be used. The integration time can be programmed in 10 millisecond increments from 10 ms (camera dependent) up to 10 seconds – refer to the 'sli' command. Enabling long integration reduces the frame rate. The resultant frame rate can

be calculated using formula 4.2. This mode is displayed on the LED by slow pulsation with a 2 second interval – refer to Status LED section.

$$\text{Frame rate [fps]} = 1 / \text{ long integration time [sec]} \qquad (4.2)$$

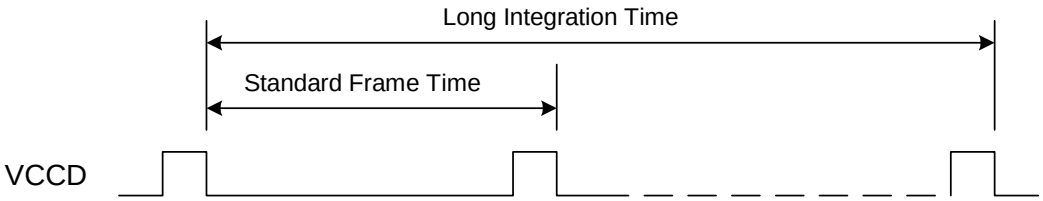

Figure 2.40 - Long Integration

CAUTION NOTE

1. During the integration time the camera has to be kept still otherwise a motion smear will appear on the image.
2. The minimum value for long integration is camera dependent:
   - IPX-VGA120-L – 10 ms
   - IPX-VGA210-L/G – 10 ms.
   - IPX-1M48-L/G – 30 ms.
   - IPX-2M30/H-L/G – 70 ms.
   - IPX-4M15-L/G – 120 ms.
   - IPX-11M5-L/G – 420 ms.
   - IPX-16M3-L/G – 680 ms.
3. Long Integration cannot be enabled in Trigger mode.
4. Long Integration cannot be enabled in Programmable Frame Rate mode.
5. Long Integration cannot be enabled in Shutter mode.
6. Long time integration significantly decreases the signal to noise ratio. More electrons will be collected from the pixels dark current and thus the camera noise will increase significantly.

2.5 EXTERNAL TRIGGER

2.5.1 Triggering Inputs

In the normal mode of operation, the camera is free running. Using the external trigger mode allows the camera to be synchronized to an external timing pulse. There are two general modes available for external triggering – software and hardware.

LYNX Cameras with Camera Link Output

In hardware triggering mode the camera receives the trigger signal coming from the connector located on the back of the camera. The hardware trigger input in LYNX with camera link output is optically isolated from the rest of the camera hardware - Figure 2.41a. The input signals "+ TRIGGER IN" and "– TRIGGER IN" are used to connect to an external trigger source. On the edge of the external pulse which creates a positive voltage difference between "+ TRIGGER IN" and "– TRIGGER IN", a trigger signal is sent to the camera. The voltage difference between the trigger inputs "+ TRIGGER IN" and "– TRIGGER IN" must be positive between 3.3 and 5.0 volts. To limit the input current a 300 ohm internal resistor is used, but the total maximum current MUST NOT exceed 25 mA. The actual trigger pulse duration does not affect the integration time. The minimum duration of the trigger pulse is 100 microseconds. There are no restrictions for the maximum pulse duration, but it is recommended that the trigger pulse is kept as short as possible, especially if a series of pulses are used.

In software triggering mode the camera receives the trigger signal coming from the frame grabber via camera control signal CC1. In this mode, the exposure time for the first frame can be programmed to operate in two ways:

1. The integration time for the first frame is determined by the value programmed in the Pre Exposure register.
2. The integration time for the first frame is determined by the duration of the actual CC1 trigger pulse.

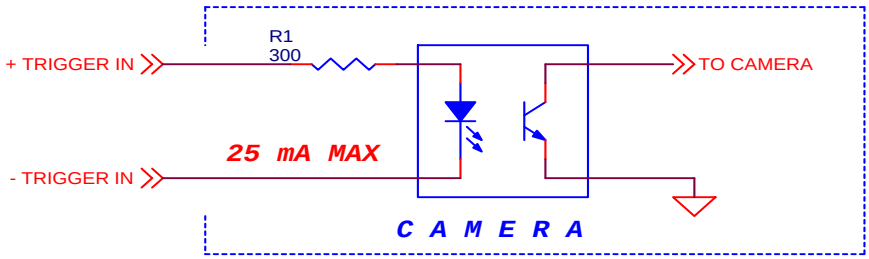

Figure 2.41a - Hardware Trigger Electrical Connection – Camera Link Output

LYNX Cameras with GigE Output

In hardware triggering mode the camera receives the trigger signal coming from the connector located on the back of the camera. The hardware trigger input in LYNX with GigE output is directly connected to the camera hardware – Figure 2.41b. The trigger signal MUST be LVTTL (3.3V) or TTL (5.0 V). The actual trigger pulse duration does not affect the integration time. The minimum duration of the trigger pulse is 10 microseconds. There are no restrictions for the maximum pulse duration, but it is recommended that the trigger pulse is kept as short as possible, especially if a series of pulses are used.

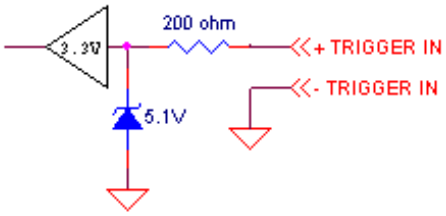

Figure 2.41b - Hardware Trigger Electrical Connection – GigE Output

- Termination: 200 Ω serial
- Input current: minimum 0 nA; maximum 20 µA
- Input voltage: maximum of low 0.9 V; minimum of high 2.1 V

In software triggering mode the camera receives the trigger signal command from the computer, but the actual trigger pulse is generated in the camera. The camera has a build in programmable pulse generator – refer to Appendix B – GigE Camera Control. In this triggering mode, the exposure time for the first frame can be programmed to operate in two ways:

1. The integration time for the first frame is determined by the value programmed in the Pre Exposure register.
2. The integration time for the first frame is determined by the value programmed in the internal pulse generator – refer to Appendix B.

Both the hardware and software triggering modes support three sub-modes of triggering – 1) standard, 2) rapid capture and 3) double exposure. When the camera is programmed to operate in either of the external trigger modes, the camera switches from free running operation to an idle mode and waits for an external pulse. The camera behavior for the different sub-modes is described below.

2.5.2 Standard Triggering - Programmable Exposure

When the standard triggering mode is enabled, the camera idles and waits for a trigger signal. Upon receiving the external trigger signal, the camera clears the horizontal and vertical registers, sends one 5 microseconds shutter pulse to clear the pixels and starts integration. The exposure time for the first frame can be programmed from 10 usec to 655 msec (in 10 microseconds increments) using the 'spe' (Set Pre Exposure) command. There is a fixed additional delay of 5 usec (because of the shutter pulse) between the rising edge of the trigger pulse and the beginning of the integration – Figure 2.42. If the CC1 input is used - the duration of the CC1 trigger pulse can also be used to determine the first frame exposure time. After the first frame has been exposed, the camera is free running, where the frame rate determines the exposure time. The number of frames captured after the trigger pulse goes high can be programmed from 1 to 250 frames, or to be free-running – refer to the 'std' command. Along with the shutter pulse, the camera sends one strobe pulse (200 microseconds duration) for synchronization with an external strobe. This pulse is always present in the external trigger mode, even if the strobe is not enabled. If the strobe is enabled, there will be a second strobe pulse during the "DATA OUT" period – refer to Figure 2.42. For more information how to enable/disable the strobe or how to control the strobe position refer to section 2.6.

CAUTION NOTE

1. Enabling several trigger options at the same time will result in an error – refer to Status LED section.
2. For proper operation - if series of trigger pulses are used, make sure that the timing interval between them is greater than the corresponding frame duration – refer to section 2.1.4 Timing Diagrams.

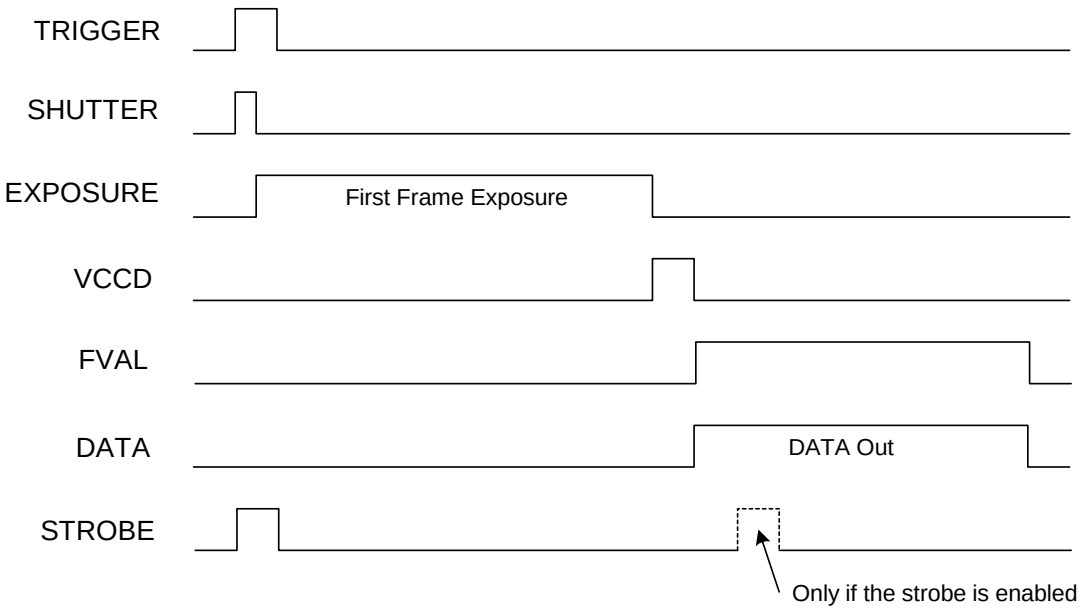

Figure 2.42 - Standard Triggering Timing

2.5.3 Fast Synchronized Triggering – Rapid Capture

Fast synchronized triggering (a.k.a. rapid capture) provides the ability to run the camera in a slave mode, allowing several cameras to be synchronized with an external master trigger signal. This mode also enables the camera to run close to its original frame rate. If hardware or software mode is enabled in rapid capture mode, the camera idles and waits for a trigger signal to come from the selected source (the external connector or CC1). Upon receiving the trigger signal, the camera starts integration until the next trigger is received. Then the information is transferred to the registers and read out. During this time the next frame is exposed – Figure 2.43. Note that in this mode the camera exposure can also be controlled with the shutter. In this triggering mode there is no strobe pulse associated with each trigger pulse. To use the strobe, the user must enable it – figure 2.43. For more information how to enable/disable or control the strobe position refer to section 2.6.

CAUTION NOTE

1. The time interval between the trigger pulses must be greater than the corresponding camera frame duration – refer to section 2.1.4 Timing Diagrams.
2. If the interval between the trigger pulses is greater than 2 or 3 times the standard frame time, it is recommended that the standard triggering option be used.

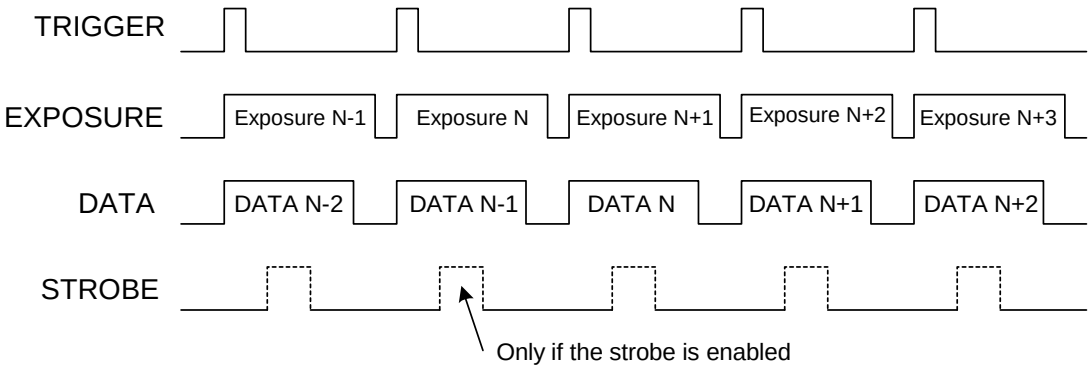

Figure 2.43 - Fast Synchronized Triggering - Rapid Capture

2.5.4 Double Exposure Triggering

Double exposure allows two events (two images) to be captured in rapid succession using a single trigger pulse. In this mode, the camera idles and waits for a trigger signal to come from the selected source (the external connector or CC1). Upon receiving the external trigger signal, the camera clears the horizontal and vertical registers, sends one 5 microseconds shutter pulse to clear the pixels, and starts integration. The exposure for the first frame can be programmed from 1 usec to 65 msec (in 1 microsecond increments) using the 'sde' (Set Double Exposure) command. If CC1 input is used - the duration of the CC1 trigger pulse can also be used to determine the first frame exposure. There is a fixed additional delay of 5 usec (because of the shutter pulse) between the rising edge of the trigger pulse and the beginning of the integration. Upon receiving the trigger signal the camera starts integration for the first frame, completes the integration, transfers the information to the vertical registers and then captures the second image. While capturing the second image the first one is being read out. After exposing the second image, the information is transferred to the vertical registers and read out – Figure 2.44. The second image exposure is equal to the corresponding camera readout time (frame duration) – refer to section 2.1.4 Timing Diagrams. Along with the shutter pulse, the camera sends one strobe pulse (200 microseconds duration) for synchronization with an external strobe. This pulse is always present in the external trigger mode, even if the strobe is not enabled. If the strobe is enabled, there will be a second and third strobe pulse during each "DATA OUT" period – refer to Figure 2.44. For more information how to enable/disable the strobe or how to control the strobe position refer to section 2.6.

CAUTION NOTE

1. It is recommended that the minimum time duration between the events is greater then the vertical transfer pulse duration:
   a. 5 microseconds for VGA, 1M48, 2M30, 2M30H and 4M15.
   b. 10 microseconds for 11M5 and 16M3.

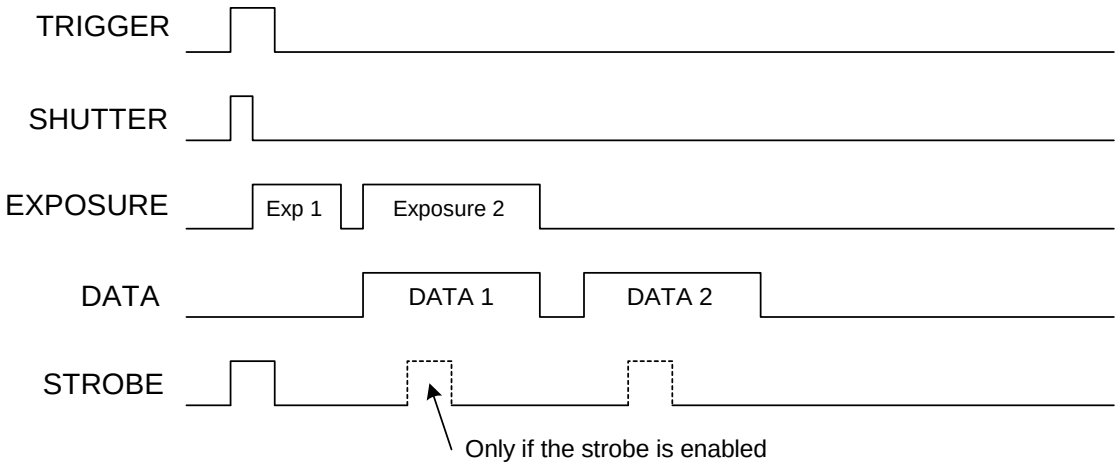

Figure 2.44 - Double Exposure Triggering

2.6 STROBE OUTPUT

2.6.1 Strobe Positioning

The strobe output is used to synchronize an external light source with the camera timing, and thus to maximize the camera efficiency in low light level conditions. The optimal strobe signal position is achieved by the positioning of a short pulse, STROBE, (duration 200 µs) with respect to the vertical transfer pulse VCCD - Figure 2.45. The strobe pulse can be positioned within the entire frame timing period with a precision 10 microseconds – refer to the 'ssp' command.

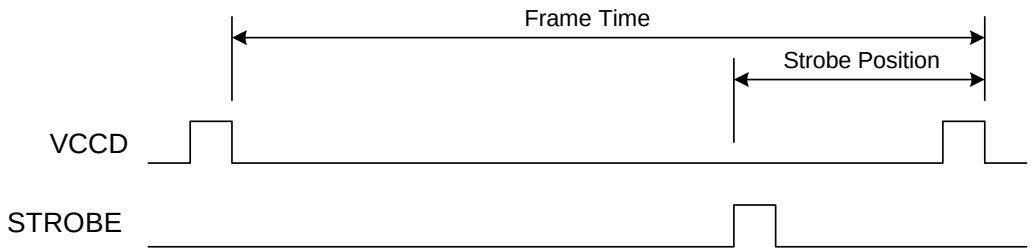

Figure 2.45 - Strobe Pulse Positioning

CAUTION NOTE

1. The strobe output can be enabled in all camera modes.
2. Positioning the strobe signal outside the frame window will result in error – refer to Status LED section.

2.6.2 Strobe Electrical Connectivity – LYNX with Camera Link Output

The strobe output is optically isolated from the rest of the camera hardware. To increase the output current to about 40 mA, the output is buffered with a discrete transistor 2N3904 - Figure 2.46a (for GigE cameras – see Figure 2.46b). The output signals "+ STROBE" and "– STROBE" are used to connect to an external strobe device. The actual connection depends on the particular implementation. Figure 2.47 shows a sample wiring diagram, which generates a 5 V strobe pulse between "+ STROBE" and "– STROBE". The first one (left) generates an active LOW strobe pulse, and the second one (right) generates an active HIGH strobe pulse.

CAUTION NOTE

1. The maximum voltage difference between the strobe outputs is 8 volts!
2. The maximum output current must not exceed 40mA!

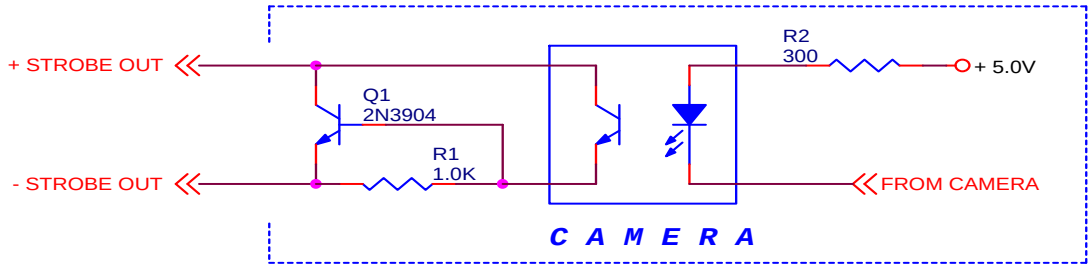

Figure 2.46a - Strobe Output Electrical Connection (Internal) – Camera Link

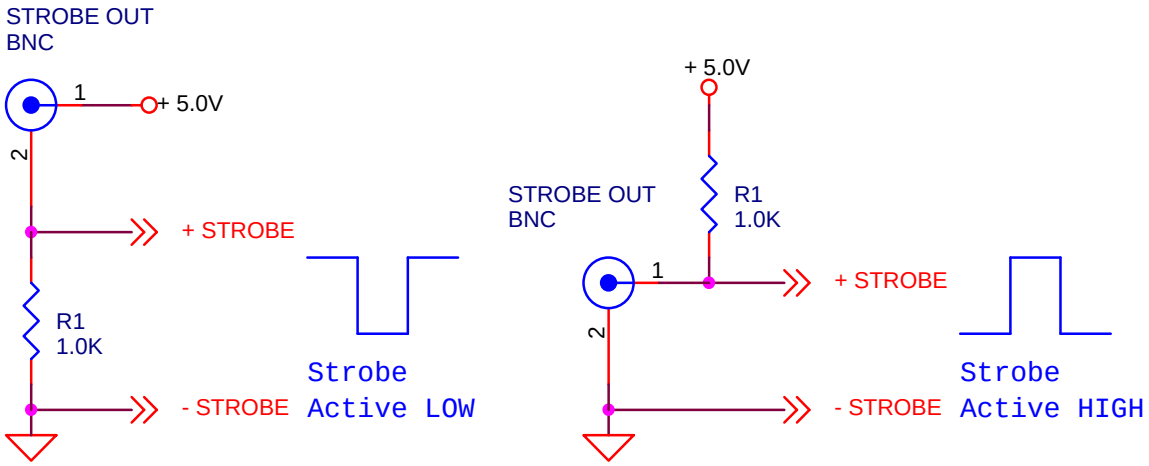

Figure 2.46b – Recommended External Strobe Output Electrical Connection – Camera Link

2.6.3 Strobe Electrical Connectivity – LYNX with GigE Output

The strobe output is directly connected to the camera hardware and is 3.3 V LVTTL compatible signal. The maximum output current MUST NOT exceed 8 mA.

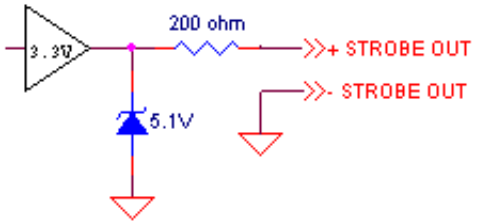

Figure 2.47 - Strobe Output Electrical Connection (Internal) - GigE

- Termination: 200 Ω serial
- Output current: sink 8 mA; source 8 mA
- Output voltage: maximum of low 0.44 V; minimum of high 2.48 V

2.7 GAIN and OFFSET

The camera has dual analog signal processors (or Analog Front End – AFE), one per channel. It features two independent 12 bit 40 MHz processors, each containing a differential input sample-and-hold amplifier (SHA), digitally controlled variable gain amplifier (VGA), black level clamp and a 12-bit ADC. The programmable internal AFE registers include independent gain and black level adjustment. There are 1024 possible gain levels (**gcode** 0 to 1023) and 256 offset (clamp) levels (**ocode** 0 to 255). Figure 2.48 shows the relationship between the video signal output level and gain/offset. Theoretically, the black level should reside at 0 volts and the gain changes should only lead to increasing the amplitude of the video signal. Since the camera has two separate video outputs coming out of the CCD, there is always some offset misbalance between the video outputs. Thus, changing the AFE gain leads to a change in the offset level and to a further misbalance between the two video signals. To correct the balance between two signals for a particular gain, the user should always adjust the offset for each output – refer to the Camera Configuration section. The overall camera gain can be calculated using formula 7.1

$$\text{VGA Gain [dB]} = \text{FG [dB]} + 0.0351 \times \textbf{gcode} \qquad (7.1)$$

CAUTION NOTE

1. Increasing the gain simultaneously increases the camera noise.
2. Fixed gain (FG) = 0 dB for IPX-1M48-L, FG = 6dB for the rest of the cameras.

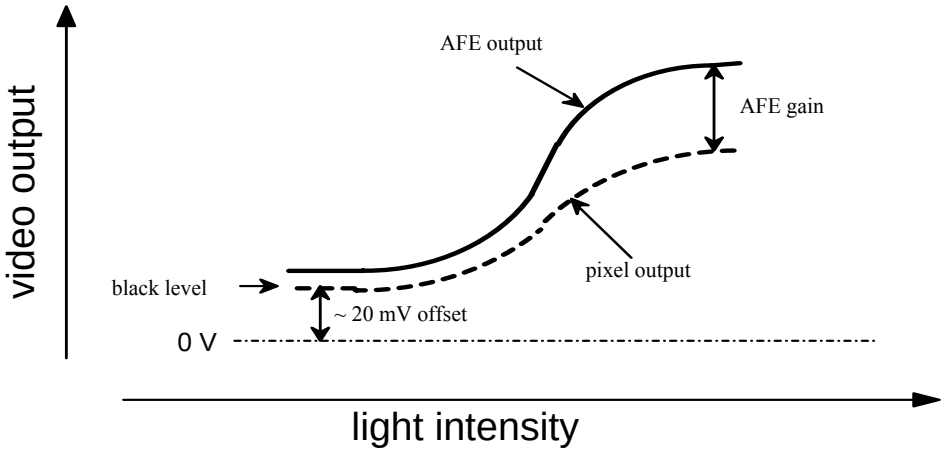

Figure 2.48 - AFE Gain and Offset

2.8 DATA OUTPUT FORMAT

The internal camera processing of the CCD data is performed in 12 bits. The camera can output the data in 12, 10 or 8 bit format. During this standard bit reduction process, the least significant bits are truncated – Figure 2.49.

12 bit output: If the 12 bit original camera data is D0 (LSB) to D11 (MSB), and camera is set to output 12 bit data, the 12 output bits are mapped to D0 (LSB) to D11 (MSB).

10 bit output: If the 12 bit original camera data is D0 (LSB) to D11 (MSB), and camera is set to output 10 bit data, the 10 output bits are mapped to D2 (LSB) to D11 (MSB).

8 bit output: If the 12 bit original camera data is D0 (LSB) to D11 (MSB), and camera is set to output 8 bit data, the 8 output bits are mapped to D4 (LSB) to D11 (MSB).

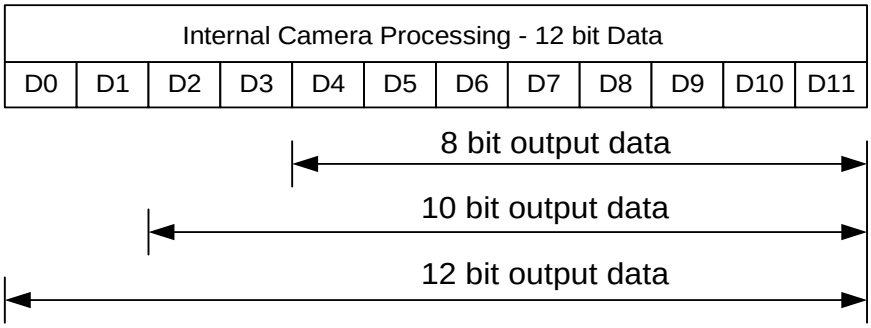

Figure 2.49 - Data Output Format

2.9 TRANSFER FUNCTION CORRECTION – USER LUT

The user defined LUT (Lookup Table) feature allows the user to modify and transform the original video data into any arbitrary value – Figure 2.50. Any 12-bit value can be transformed into any other 12-bit value. The camera supports two separate lookup tables, each consisting of 2048 entries, with each entry being 12 bits wide. The first LUT is factory programmed with a standard Gamma 0.45 correction – see section 2.9.1. The second LUT is not pre-programmed in the factory. Both LUT's are available for modifications, and the user can generate and upload his own custom LUT using the LynxTerminal software – refer to Appendix B.

Figure 2.50 - Look Up Table

2.9.1 Standard Gamma Correction

The image generated by the camera is normally viewed on a CRT (or LCD) display, which does not have a linear transfer function – i.e., the display brightness is not linearly proportional to the scene brightness (as captured by the camera). As the object brightness is lowered, the brightness of the display correspondingly lowers. At a certain brightness level, the scene brightness decrease does not lead to a corresponding display brightness decrease. The same is valid if the brightness is increased. This is because the display has a nonlinear transfer function and a brightness dynamic range much lower than the camera. The camera has a built-in transfer function to compensate for this non-linearity, which is called gamma correction. If enabled, the video signal is transformed by a non-linear function close to the square root function (0.45 power) – formula 9.1. In the digital domain this is a nonlinear conversion from 12-bit to 12-bit – Figure 2.51. If the camera resolution is set to 8-bit or 10-bit, the camera will truncate the corresponding LSBs (see section 2.8).

$$\text{Output signal [V]} = (\text{input signal [V]})^{0.45} \qquad (9.1)$$

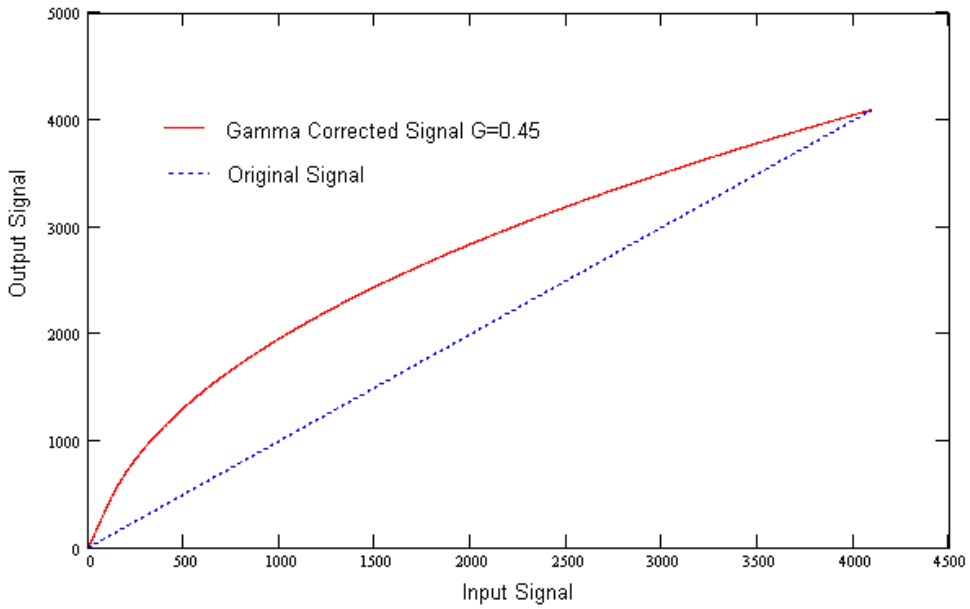

Figure 2.51 - Gamma Corrected Video Signal

2.9.2 User Defined LUT - Examples

The user can define any 12-bit to 12-bit transformation as a user LUT and can upload it to the camera using the configuration utility software. If the camera resolution is set to 8 or 10 bit, the camera will truncate the corresponding LSB's (see section 2.8). Here are some typical examples:

Example 1 – Custom LUT

The user can specify a transfer function of their choice to match the camera's dynamic range to the scene's dynamic range. There are no limitations to the profile of the function. The LUT must include all possible input values (0 to 4095). Refer to Appendix D.

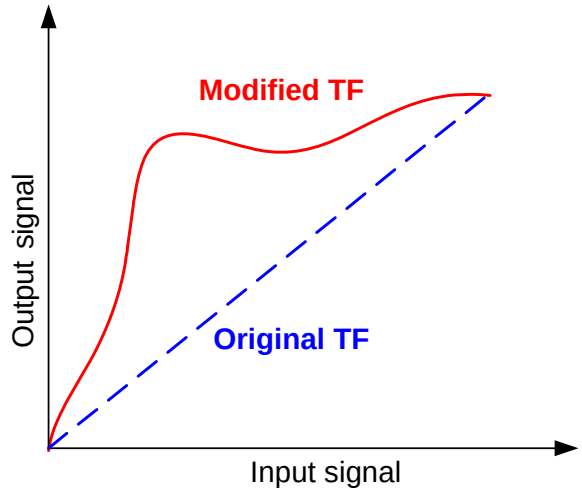

Figure 2.52 - Custom LUT

Example 2 – Knee correction

In this example only 2 knee points have been introduced, the first one is at (400H) and the second at (A00H). The number of knee points is not limited.

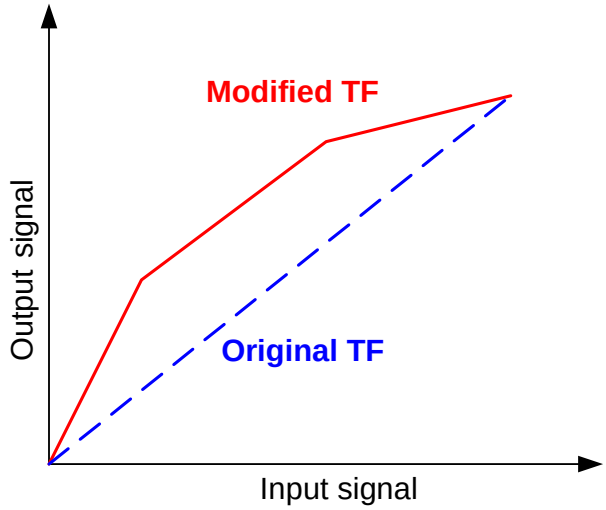

Figure 2.53 - Knee Correction

Example 3 – Contrast Correction

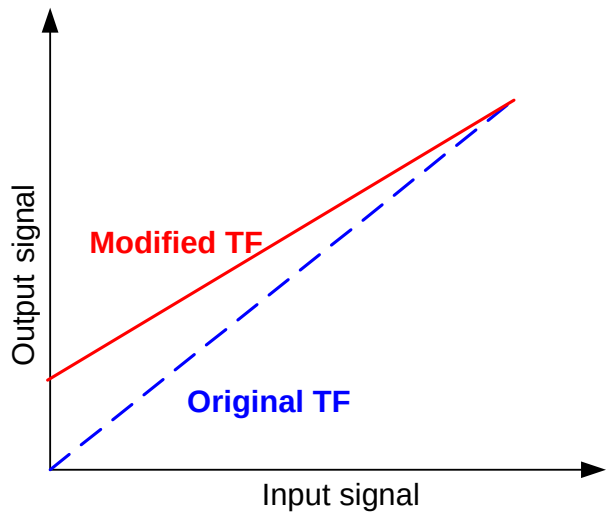

Figure 2.54 - Contrast Correction

Example 4 – Negative Image

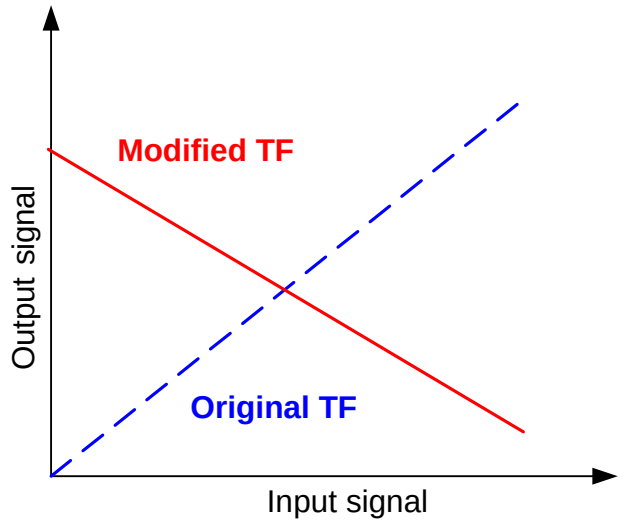

Figure 2.55 - Negative Image

Example 5 – Digital Shift

The "Digital Shift" feature allows the user to change the group of bits sent to the camera output and therefore manipulate the camera brightness and contrast. The internal camera processing of the data is 12 bits. If the camera is set to output 10 bits of data then the two least significant bits are truncated. In some cases the user may need to convert from 12 to 10 bit by preserving the 2 least significant bits and truncating the 2 most significant ones. In other occasions the user may need to increase the image brightness 2x, 4x, 8x, etc.

Example A. Increasing the image brightness 2x:

The original camera data is D0 (LSB) to D11 (MSB)

Input Data - 12 bit											
D0	D1	D2	D3	D4	D5	D6	D7	D8	D9	D10	D11

Create a LUT in which the bits are shifted by one to the right.

Modified 12 bit Output Data - (11 bit data + 1 bits shifted right)											
0	D0	D1	D2	D3	D4	D5	D6	D7	D8	D9	D10

Example B. Increasing the image brightness 4x:

The original camera data is D0 (LSB) to D11 (MSB)

Input Data - 12 bit											
D0	D1	D2	D3	D4	D5	D6	D7	D8	D9	D10	D11

Create a LUT in which the bits are shifted with two to the right.

Modified 12 bit Output Data - (10 bit data + 2 bits shifted right)											
0	0	D0	D1	D2	D3	D4	D5	D6	D7	D8	D9

Example C. Performing a non-standard 12 to 10 bit conversion:

The original camera data is D0 (LSB) to D11 (MSB)

Input Data - 12 bit											
D0	D1	D2	D3	D4	D5	D6	D7	D8	D9	D10	D11

Create a LUT, which truncates the 2 most significant bits (bits are shifted with two to the right).

Modified 12 bit Output Data - (10 bit data + 2 bits shifted right)											
0	0	D0	D1	D2	D3	D4	D5	D6	D7	D8	D9

During the 12 to 10 bit conversion, the 2 least significant bits will be truncated.

Modified 12 bit Output Data - (10 bit data + 2 bits shifted right)											
0	0	D0	D1	D2	D3	D4	D5	D6	D7	D8	D9

10 bit output data

The camera output will be 10 bits, but in this case bits D0 to D9 are mapped to the output.

Modified 10 bit Output Data									
D0	D1	D2	D3	D4	D5	D6	D7	D8	D9

If only the standard conversion was applied, D2 to D11 would have been mapped to the output.

Standard 10 bit Output Data									
D2	D3	D4	D5	D6	D7	D8	D9	D10	D11

2.10 DYNAMIC SIGNAL-TO-NOISE CORRECTION

As was described in the section 2.7 (Gain and Offset), the reference black level on each CCD output fluctuates around 0V – Figure 2.56. The AFE offset correction works on the entire image and if there are noise fluctuations on a line level, the AFE is not capable of correcting them. The camera has a built in dynamic signal-to-noise correction feature to compensate for this effect. In the beginning of each line the CCD has several back (masked) columns. The dark level for each tap is sampled over several of these masked pixels and the average per tap black level floor is calculated for each frame. The average floor level for each tap is then subtracted from each incoming pixel (from the corresponding tap) from the next frame.

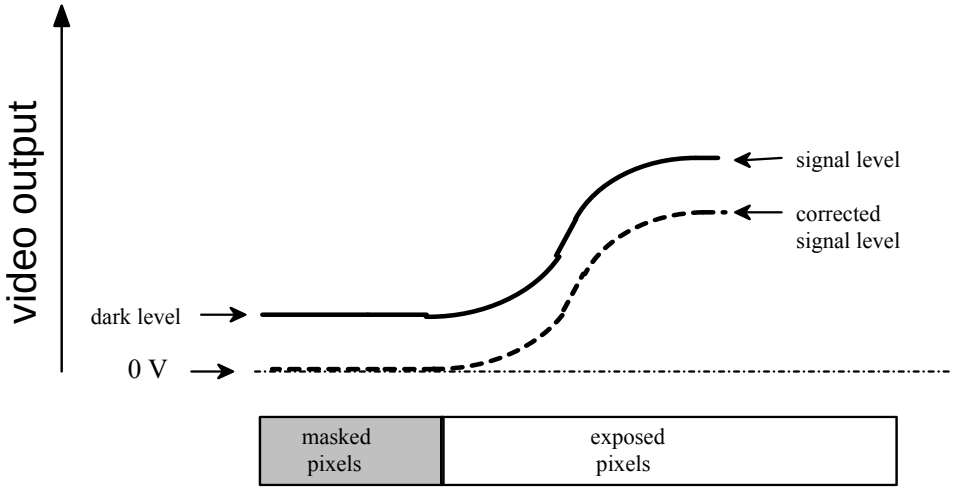

Figure 2.56 - Dynamic Signal-to-Noise Correction

2.11 IMAGE REVERSAL

When operating in the image reversal mode, all pixels are shifted to the output in the reverse order. The resultant image appears left/right mirrored in the horizontal direction – Figure 2.57. This feature could be useful if the camera receives a mirrored image (i.e. image coming from a mirror). In this mode the image has a normal vertical orientation and full resolution. This feature is available in both single and dual output modes - refer to the 'sir' command.

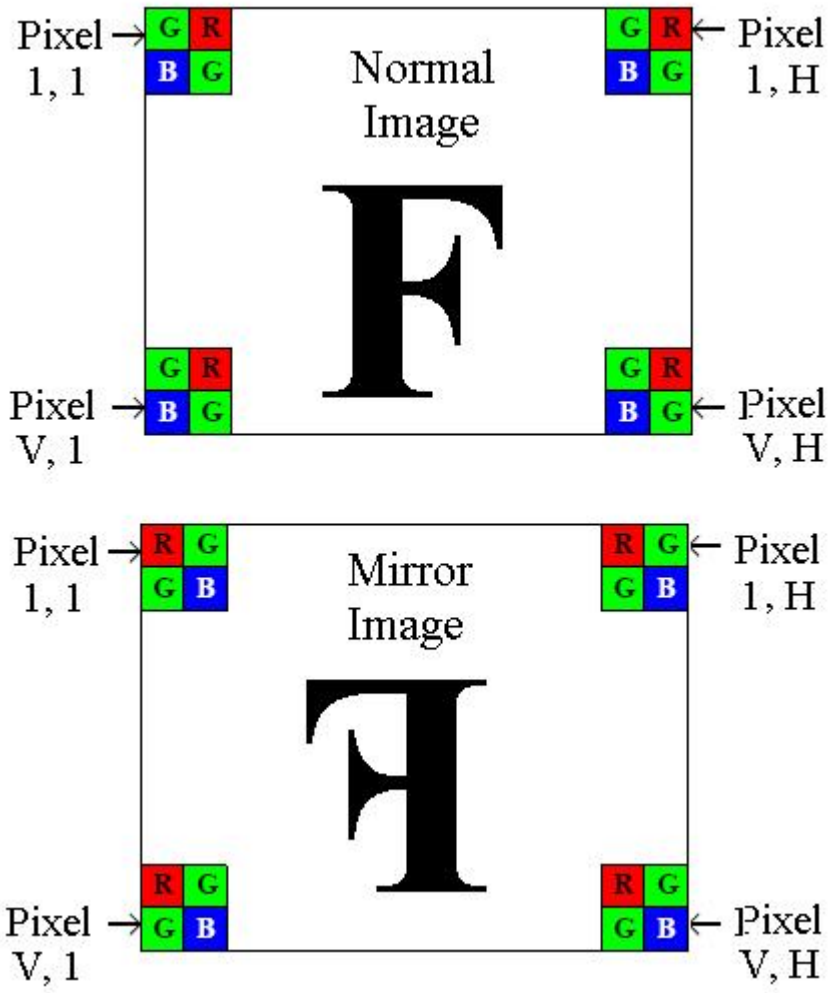

Figure 2.57 - Normal and Mirror Image

2.12 NEGATIVE IMAGE

When operating in the negative image mode, the value of each pixel is inverted. The resultant image appears negative – Figure 2.58. This feature could be useful if the camera receives a negative image (i.e. image from microfilms, prints or slides). In this mode the image has a normal vertical and horizontal orientation and full resolution. This feature is available in both single and dual output modes – refer to the 'sni' command.

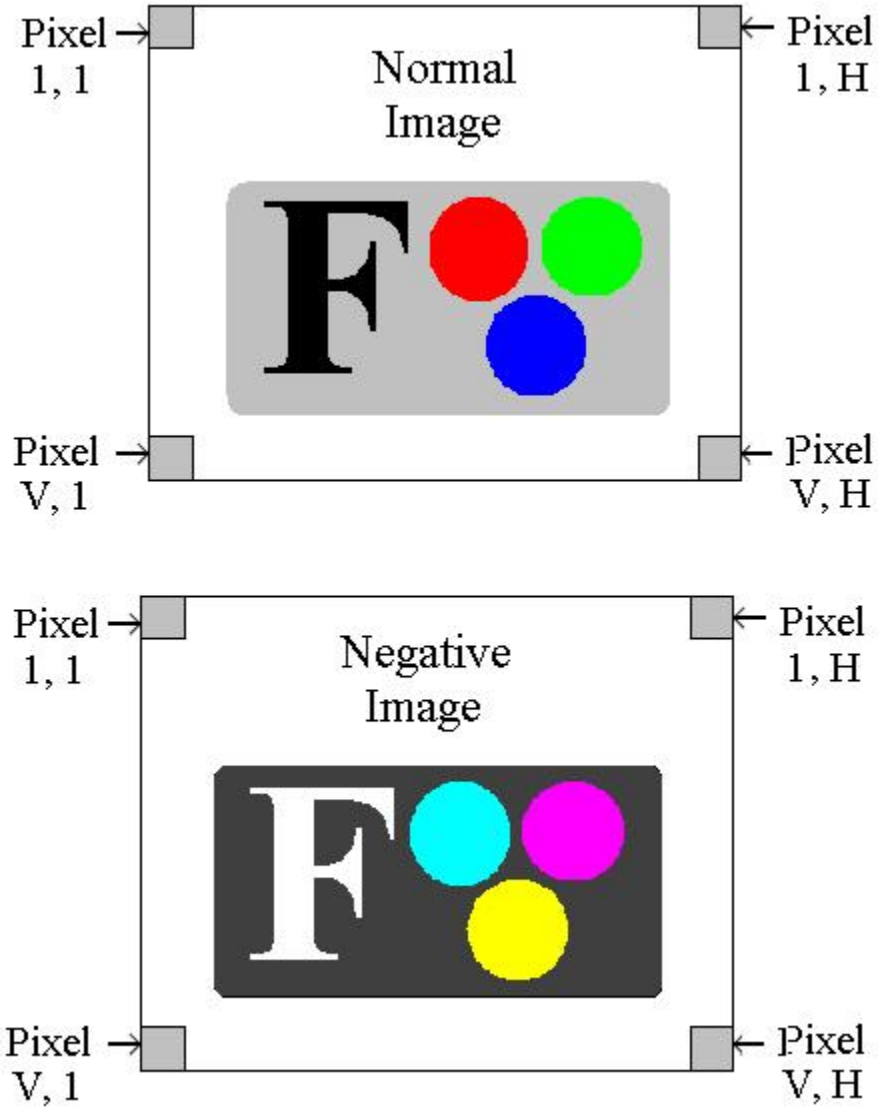

Figure 2.58 - Normal and Negative Image

2.13 CAMERA INTERFACE

2.13.1 Status LED

The camera has a green LED, located on the back panel, which indicates the camera status and mode of operation.

- **LED is steady ON** – Normal operation. The user is expected to see a normal image coming out of the camera.
- **LED blinks with frequency ~ 1Hz** – indicates a camera power supply failure. This could be caused by a faulty external AC adapter.
- **LED rapidly blinks with frequency ~ 5Hz** – indicates camera failure during initial setup. During camera power up this indicates an error in the camera boot up sequence. The user is expected to see a uniform gray screen. To restore the normal operation load the factory setting – refer the Camera Configuration section.
- **LED has one short blink every 3 seconds** – Test mode. The user is expected to see one of the test patterns.
- **LED has two short blinks every 3 seconds** – External or CC1 trigger mode. The camera is waiting for a trigger input.
- **LED has two short blinks every 3 seconds and then blinks rapidly** – External or CC1 trigger mode. The camera is receiving trigger pulses and blinks at the trigger rate.
- **LED has three short blinks every 3 seconds** – Test mode and External trigger mode enabled in the same time. The camera is waiting for an external trigger input and upon receiving the signal the user will see one of the test patterns.
- **LED blinks slowly with frequency ~ 0.3Hz** – Long integration mode. The camera has to be kept steady to avoid image smear.
- **LED is OFF** – General error. The camera has no power or unexpected error occurred. To restore the camera operation, re-power the camera and load the factory settings.

2.13.2 Temperature Monitor

The camera has a built in temperature sensor which monitors the internal camera temperature. The sensor is placed on the hottest spot in the camera. The internal camera temperature is displayed on the Camera Configuration Utility screen and can be queried by the user at any time. The user can also set the alarm threshold temperature – refer to Camera Configuration section. If the camera reaches this temperature, a message is sent via the serial port and

the LED on the back of the camera starts to blink rapidly. The alarm is for indication only and does not prevent the camera from continue to operate normally.

2.13.3 Integration Time Monitor

The camera has a built in integration time monitor. In any mode of operation (i.e. normal, AOI, binning, etc.) the user can query the camera for the current exposure time by issuing a 'gce' command. The current camera integration time in units of microseconds will be returned.

2.13.4 Frame Rate Monitor

The camera has a built in frame rate monitor. In any mode of operation (i.e. normal, AOI, binning, etc.) the user can query the camera for the current frame rate by issuing a 'gcs' command. The current camera speed in units of frames per second will be returned.

.

2.14 TEST MODE

The camera can output three test images (two fixed and one moving), which can be used to verify the camera's general performance and connectivity to the frame grabber. This ensures that all the major modules in the hardware are working properly and that the connection between the frame grabber and the camera is synchronized (i.e., the camera parameters: # pixels, # lines, # bits, output mode, communication rate, etc. are properly configured). Figure 2.59 shows a diagonal gray scale variation for single and dual modes. Figure 2.60 shows gray scale vertical bars for single and dual modes. The motion test pattern is a diagonal gray scale variation similar to test pattern #1. The motion is in the vertical direction. The test mode does not exercise and verify the CCD's functionality.

Figure 2.59 - Fixed Pattern #1: Single and Dual Modes

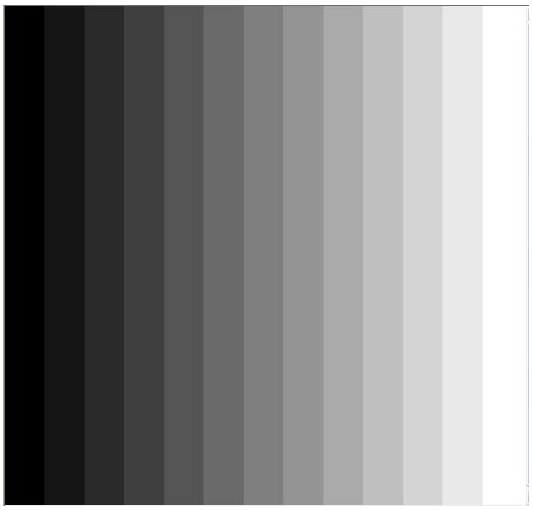

Figure 2.60 - Fixed Pattern #2: Single and Dual Modes

2.15 AUTOMATIC IRIS CONTROL

The camera has an optional auto iris control feature. If enabled, the camera calculates the average image brightness within the frame and compares it to a user specified threshold level – refer to the 'sai' command. If the calculated brightness level is less then the threshold, the camera sends a signal to open the lens iris. If the brightness level is more than the threshold, the camera sends a signal to close the iris. The camera iris control hardware is compatible only with DC type auto iris lenses.

2.16 DEFECTIVE PIXEL CORRECTION

All CCD sensors have some number of defective pixels. A defective pixel is defined as a pixel whose response deviates by more than 15% from the average response. In extreme cases these pixels can be stuck 'black' or stuck 'white' and are non-responsive to light. During factory final testing, our manufacturing engineers run a program specially designed to identify these 'defective' pixels. The program creates a file which lists the coordinates (i.e. row and column) of every defective pixel. This file, called the Defect Pixel Map, is then downloaded into the camera's non-volatile memory. When 'Defective Pixel Correction' is enabled, the camera will compare each pixel's coordinates with entries in the 'defect' map. If a match is found, then the camera will 'correct' the defective pixel. Defective Pixel Correction is enabled by issuing an '*sdc on*' (Set Defect Correction – On) command. The camera will display the contents of the Defect Pixel Map when the user issues a '*dpm*' (Dump Pixel Map) command.

2.17 FLAT FIELD CORRECTION

A CCD imager is composed of a two dimensional array of light sensitive pixels. Each pixel within the array, however, has its own unique light sensitivity characteristics. Most of the deviation is due to the difference in the angle of incidence and to charge transport artifacts. This artifact is called 'Shading' and in normal camera operation should be removed. The process by which a CCD camera is calibrated for shading is known as 'Flat Field Correction'. Refer to Figures 2.61 and 2.62 for images acquired before and after Flat Field Correction.

The Lynx series of cameras incorporate a Flat Field Correction mechanism. The Flat Field Correction mechanism measures the response of each pixel in the CCD array to illumination and is used to correct for any variation in illumination over the field of the array. The optical system most likely introduces some variation in the illumination pattern over the field of the array. The flat field correction process compensates for uneven illumination, if that illumination is a stable characteristic of each object exposure.

During factory final testing, our manufacturing engineers run a program specially designed to identify the shading characteristics of the camera. The program creates a Flat Field Correction file, which contains coefficients describing these shading characteristics. This file is then downloaded into the camera's non-volatile memory. When Flat Field Correction is enabled, the camera will use the Flat Field Correction coefficients to compensate for the shading effect. Flat Field Correction is enabled by the user issuing an '*sfc on*' (Set Flatfield Correction – On) command.

Each Imperx camera is shipped with the Flat Field Correction file that was created for that camera during factory final testing. Users may wish, however, to create their own Flat Field Correction file because of the uniqueness of their operating environment (i.e. lens, F-stop, lighting, etc.). Therefore, Imperx provides a Flat Field Correction utility that allows users to generate a Flat Field Correction file. This file can then be downloaded into the camera. While creating the Flat Field Correction file, it is necessary to illuminate the CCD with a light pattern that is as representative of the background illumination as possible. This illumination should be bright enough, or the exposure made long enough, so that the CCD pixels signals are at least 25 percent of full scale (for 12 bit mode the level should be at least 1000 ADUs). Please refer to application note 'AN-L04' for details on how to create a Flat Field Correction file.

NOTE: Flat Field Correction is supported only in the IPX-2M30, IPX-2M30H, IPX-4M15, IPX-11M5 and IPX-16M3 cameras.

Figure 2.61 – Original image showing 'shading' effect

Figure 2.62 – Flat Field Corrected image

2.18 THERMO-ELECTRIC COOLING (TEC)

Active cooling of the CCD-imager through solid state thermoelectric cooler (Peltier element) is available on the IPX-4M15T, IPX-11M5T and IPX-16M3T cameras. The CCD imager is cooled to several degrees below ambient compared to ambient plus 20 degC (approximately) for the uncooled cameras. The exact CCD temperature varies with camera model due to the difference in imager size and available power for the cooler.

The cooler is based on a single stage Peltier thermoelectric element driven by an electronic control circuit which controls the current/power flowing into the cooler while monitoring the CCD temperature. The cooler acts like a heat pumping device, removing heat from the CCD and dissipating it through the external heatsink/housing. The cooler requires additional power to remove heat. Every watt of heat removed requires about one watt of operating power. For this reason the TEC cooled cameras require a larger heatsink/housing to dissipate the additional heat generated (heat removed + input power). The additional power dissipated ranges from 5W to 15W depending on camera model and operating conditions.

Because the CCD imager operates below ambient and because the temperature can approach 0 degC the CCD chamber has to be sealed and filled with dry nitrogen to prevent the formation of condensation on the imager. The nitrogen charge needs to be checked periodically (annually) or whenever condensation occurs. Refer to the Imperx "TEC Nitrogen-check/purge/refill" application note for details. The camera should not be exposed to extreme pressure and temperature changes to prevent the loss of Nitrogen from the CCD chamber. Consult Imperx for details

TEC cooled cameras require between 1A and 3A of current at 12Vdc depending on camera model and operating mode/condition which has to be considered when camera is not powered from the supplied AC/DC adapter.

Chapter 3

Camera Configuration

This chapter discusses how to configure the camera's operating parameters.

3.1 Overview

The Lynx series of cameras are highly programmable and flexible. All of the camera's features and operating parameters can be controlled by the user. The user communicates with the camera using simple ASCII commands via the Camera Link's serial interface. All of the cameras resources (internal registers, video amplifiers and EEPROM) can be configured and monitored via this interface. The format of the serial interface is ASYNC with 8 data bits, 1 stop bit, no parity and no handshake. The interface operates at a rate of 9,600 bps. The interface is bi-directional with the user issuing 'commands' to the camera and the camera issuing 'responses' (either status or info) to the user. The camera's parameters can be programmed using the Lynx Configurator graphical user interface or via simple ASCII commands using the Lynx Terminal utility or any terminal emulator.

3.2 Configuration Memory

The camera has a built-in configuration memory divided into 4 segments: 'work-space', 'factory-space', 'user-space #1' and 'user-space #2'. The 'work-space' segment contains the current camera settings while the camera is powered-up and operational. All camera registers are located in this space. These registers can be programmed and retrieved via commands issued by the user. The workspace is RAM based and upon power down all camera registers are cleared. The 'factory-space' segment is ROM based, write protected and contains the default camera settings. This space is available for read operations only. The 'user-space #1' and 'user-space #2' are non-volatile, EEPROM based and used to store two user defined configurations. Upon power up, the camera firmware loads the work-space registers from either the factory-space, user-space #1 or user-space #2 as determined by a 'boot control' register located in the configuration memory. The 'boot control' register can be programmed by the user (refer to Camera Configuration Section) with the `'sbf'` command. The user can, at any time, instruct the camera to loads its workspace with the contents of either the 'factory-space', 'user-space #1' or 'user-space #2'. Similarly, the user can instruct the camera to save the current workspace settings into either the 'user-space #1' or 'user-space #2'.

3.3 Command Format

Command strings consist of a command token followed by up to two parameters. The format of the command string is:

```
<command> <parm1> <parm2><cr>
```

In response to the receipt of a command string, the camera will perform the intended operation and return a response string. Depending on the type of command received, the camera will return either a 'status' response or an 'info' response. A 'status' response generally reports the success or failure of the camera to perform the commanded operation. An 'info' response provides specific camera information requested by user.

The format of the status response string is:

`OK<cr><lf>:`	if the command was processed properly.
`Error: <text><cr><lf>:`	if the command was not processed due to an error, where <text> is an explanation of the error.

The format of the info response string is:

`<response><cr><lf>:`	see the following sections for details of the <response> string.

Important Note: The following applies to software versions 1.57 and lower. Escape markers were removed from software version 1.58 and higher.

All camera responses are enclosed within a pair an Escape Markers. An Escape Marker consists of a 6 character string as follows:

```
<ESC>[<CODE1><CODE2><CODE3><CODE4>
```

Byte1 = 1B hex (ESC character)
Byte2 = 5B hex ([character)
Byte3-6 = marker codes

For example, in response to a 'gag 1' command the camera will return (in hex):

67 61 67 20 31 20 0D 0A 1B 5B A1 00 00 00 0D 0A 31 34 2E 39 37 64 42 0D 0A 1B 5B A2 00 00 00 0D 0A 3A 20
gag 1 (if echo is on) Escape Marker 14.97 dB Escape Marker :

Escape Markers are used during camera download and should be ignored otherwise. Terminal emulator programs (i.e. HyperTerminal) are designed to ignore Escape Markers.

3.4 Command Help

The camera will return a list of available commands when the user enters the `'h'` command.

For command specific help, enter `'h <cmd>'`, and the camera will display the command definition and syntax. For example, entering `'h svw'` yields:

```
Set vertical window

Syntax: svw {y1 y2}
```

3.5 Startup procedure

Upon power on or receipt of an `'rc'` command, the camera performs the following steps:

1. The RISC processor runs and executes code from internal read only memory.
2. The boot loader code sends the string:

   `"Boot loader version x.y running…".`

3. Boot loader checks FLASH memory for a valid software application.
4. If a valid software application is not found, the boot loader waits for the user to perform a software download (refer to Appendix B) and sends the string:

   `"No FLASH image found…waiting for software download command"`

5. If a valid software application is found, the application program is copied from FLASH to SRAM and the RISC processor start executing it.
6. The camera sends a string that contains the camera type (read from the EEPROM's manufacturing data area), boot loader's revision number, software application's revision number and firmware's revision number. For example:

   `'IPX-1M48-L – SW v2.0 - BL v1.0 - FW v1.5'`

7. The camera reads the 'Boot From' variable from the EEPROM and sends one of the following strings as determined by the 'Boot From' variable:

   `'Loading from Factory…'`

   `'Loading from User #1…'`

   `'Loading from User #2…'`

8. The camera loads its workspace from one of the configuration spaces by performing a `'lff'`, `'lfu 1'` or `'lfu 2'` command.
9. The camera sends an `'OK<cr><lf>:'` string and is ready to accept user commands.

3.6 Saving and Restoring Settings

Operational settings for the camera may be stored for later retrieval in its non-volatile memory. Three separate configuration spaces exist for storing these settings: 'factory' space, 'user #1' space and 'user #2' space. The factory space is pre-programmed by factory personnel during the manufacturing process. This space is write protected and cannot be altered by the user. Two user spaces are also provided allowing the user to store his/her own preferences. The camera can be commanded to load its internal workspace, from either of the three configuration spaces, at any time. The user can also define from which space the camera should automatically load itself following a power cycle or receipt of a reset (`'rc'`) command.

3.6.1 Set Boot From (*'sbf'*)

The `'sbf'` command determines which configuration space (factory, user#1 or user #2) should be loaded into the camera following a power cycle or reset (`'rc'`) command. This command sets a 'boot from' variable that is saved in non-volatile memory. Upon a power cycle or reset, the camera reads the 'boot from' variable from non-volatile memory and loads the appropriate configuration space.

Syntax:	`sbf <f|u1|u2>`	
Parameter #1:	`f`	Factory configuration space.
	`u1`	User #1 configuration space.
	`u2`	User #2 configuration space.
Example:	`sbf u1`	Sets the 'boot from' variable to user #1.

3.6.2 Get Boot From (*'gbf'*)

The `'gbf'` command returns the current state of the 'boot from' variable.

Syntax:	`gbf`	
Response:	`f|u1|u2`	
Example:	`gbf`	User enters command.
	`u1`	Camera responds with current settings.

3.6.3 Load From Factory (*'lff'*)

The `'lff'` command instructs the camera to load its workspace from the factory space. All current workspace settings will be replaced with the contents of the factory space.

Syntax: `lff`

3.6.4 Load From User (*'lfu'*)

The `'lfu'` command instructs the camera to load its workspace from one of the two user spaces. All current workspace settings will be replaced with the contents of the selected user space.

Syntax:	`lfu <1|2>`	
Parameter #1:	`1`	User #1 configuration space.
	`2`	User #2 configuration space.
Example:	`lfu 2`	Camera loads workspace from user #2 space.

3.6.5 Save To Factory (*'stf'*)

The `'stf'` command instructs the camera to save all of the current workspace settings into the factory space.

Syntax: `stf`

Note: This command can only be executed in supervisor mode. It is intended for use by factory personnel only.

3.6.6 Save To User (*'stu'*)

The `'stu'` command instructs the camera to save all of the current workspace settings into the selected user space.

Syntax:	`stu <1|2>`	
Parameter #1:	`1`	User #1 configuration space.
	`2`	User #2 configuration space.
Example:	`stu 1`	Camera saves workspace into user #1 space.

3.7 Retrieving Manufacturing Data

The camera contains non-volatile memory that stores manufacturing related information. This information is programmed in the factory during the manufacturing process.

3.7.1 Get Manufacturing Data (*'gmd'*)

The `'gmd'` command returns a listing of all manufacturing data.

Syntax: `gmd`

Response: Camera responds with complete manufacturing data.

Example:

```
Assembly Part #:      ASSY-0044-0001-RA01
Assembly Serial #:    010009
CCD Serial #:         018075
Date of Mfg:          12/17/03
Camera Type:          IPX-1M48-L
```

3.7.2 Get Assembly Number (*'gan'*)

The `'gan'` command returns the camera's assembly number.

Syntax: `gan`

Response: Camera responds with its assembly number.

Example: `ASSY-0044-0001-RA01`

3.7.3 Get Model Number (*'gmn'*)

The `'gmn'` command returns the camera's model number.

Syntax: `gmn`

Response: Camera responds with its model number.

Example: `IPX-1M48-L`

3.7.4 Get Firmware Version (*'gfv'*)

The `'gfv'` command returns the camera's firmware version.

Syntax: `gfv`

Response: Camera responds with its firmware version and customer ID (for custom firmware).

Example: `FW v1.3 CUST 5`

3.7.5 Get Software Version (*'gsv'*)

The `'gsv'` command returns the camera's software version.

Syntax:	`gsv`
Response:	Camera responds with its software version, bootloader version and customer ID (for custom software).
Example:	`SW v1.0 BL v2.0 CUST 4`

3.8 Command Description

3.8.1 Horizontal Window

3.8.1.1 Set Horizontal Window ('shw')

The `'shw'` command sets the horizontal area of interest. The camera will deliver to the Camera Link interface, per line, only the range of pixels specified by this command. This command programs the camera with the starting and ending pixel but does not turn on windowing. In order to enable windowing, the `'shm w'` command must be issued.

Syntax:	`shw <x1> <x2>`	
Parameter #1:	`x1`	The first pixel in the line.
Parameter #2:	`x2`	The last pixel in the line.
Range:	`x1`	min=1, max=camera dependent
	`x2`	min=1, max=camera dependent
Example:	`shw 100 500`	Sets the horizontal window from pixel# 100 to pixel# 500.

Notes: When using this command it is necessary to adjust the number of active pixels per line in the frame grabber to the value: x2-x1+1.

3.8.1.2 Get Horizontal Window ('ghw')

The `'ghw'` command returns the current horizontal area of interest setting.

Syntax:	`ghw`	
Response:	`x1 x2`	
Example:	`ghw`	User enters command.
	`100 500`	Camera responds with current settings.

3.8.2 Vertical Window

3.8.2.1 Set Vertical Window ('svw')

The `'svw'` command sets the vertical area of interest. The camera will deliver to the Camera Link interface, per frame, only the range of lines specified by this command. Using this command increases the effective frame rate of the camera and also reduces the automatic exposure time (when shutter is disabled). This command programs the camera with the starting and ending line but does not turn on windowing. In order to enable windowing, the `'svm w'` command must be issued.

Syntax:	`svw <y1> <y2>`	
Parameter #1:	`y1`	The first line in the image.
Parameter #2:	`y2`	The last line in the image.
Range:	`y1` `y2`	min=1, max=camera dependent min=1, max=camera dependent
Example:	`svw 10 120`	Sets the vertical window from line# 10 to line# 120.

Notes: When using this command it is necessary to adjust the number of active lines in the frame grabber to the value: y2-y1+1.

3.8.2.2 Get Vertical Window ('gvw')

The `'gvw'` command returns the current vertical area of interest setting.

Syntax:	`gvw`	
Response:	`y1 y2`	
Example:	`gvw` `10 120`	User enters command. Camera responds with current settings.

3.8.3 Shutter Time

3.8.3.1 Set Shutter Time ('sst')

The `'sst'` command sets the shutter timing.

Syntax:	`sst <off|i>`	
Parameter:	`off`	Disables the shutter mode.
	`i`	The shutter time in units of uSeconds.
Range:	`i`	min=50
		max=the lesser of 500,000 or 1/frame rate
Example:	`sst 80`	Sets the shutter time to 80 uSeconds.
Notes:	The shutter operates in increments of 10 uSeconds and therefore will round the least significant digit entered.	

3.8.3.2 Get Shutter Time ('gst')

The `'gst'` command returns the current shutter setting.

Syntax:	`gst`	
Response:	`off|i`	
Example:	`gst`	User enters command.
	`80`	Camera responds with current setting.

3.8.4 Long Integration

3.8.4.1 Set Long Integration ('sli')

The `'sli'` command sets the long integration timing.

Syntax:	`sli <off|i>`	
Parameter:	`off`	Disables the long integration mode.
	`i`	The long integration time in units of mSeconds.
Range:	`i`	min=10 max=10,000
Example:	`sli 750`	Sets the long integration time to 750 msecs.
Notes:	Long integration operates in increments of 10 mSeconds and therefore will round the least significant digit entered.	

3.8.4.2 Get Long Integration ('gli')

The `'gli'` command returns the current long integration setting.

Syntax:	`gli`	
Response:	`off|i`	
Example:	`gli`	User enters command.
	`750`	Camera responds with current setting.

3.8.5 Strobe Position

3.8.5.1 Set Strobe Position ('ssp')

The `'ssp'` command sets the position of the strobe pulse output. The strobe pulse position is set relative to the end of the frame.

Syntax:	`ssp <off|i>`	
Parameter:	`off`	Disables the strobe.
	`i`	The strobe position in units of uSeconds.
Range:	`i`	min=10
		max=the lesser of 500,000 or 1/frame rate
Example:	`ssp 120`	Sets the strobe position to 120 uSeconds.
Notes:	The strobe operates in increments of 10 uSeconds and therefore will round the least significant digit entered.	

3.8.5.2 Get Strobe Position ('gsp')

The `'gsp'` command returns the current long integration setting.

Syntax:	`gsp`	
Response:	`off|i`	
Example:	`gsp`	User enters command.
	`120`	Camera responds with current setting.

3.8.6 Analog Gain

3.8.6.1 Set Analog Gain ('sag')

The `'sag'` command sets the analog gain of the camera.

Syntax:	`sag <0|1|2> <i> <j>`	
Parameter #1:	`0`	Sets both taps to the same gain or to different gains.
	`1`	Selects tap #1.
	`2`	Selects tap #2.
Parameter #2:	`i`	The tap #1 gain setting in dB.
Parameter #3:	`j`	The tap #2 gain setting in dB.
Range:	`i,j`	min=6, max=40
Examples:	`sag 2 12`	Sets the gain for tap #2 to 12 dB.
	`sag 0 12`	Sets both tap gains to 12 dB.
	`sag 0 10 12`	Sets tap#1 gain to 10 dB and tap #2 gain to 12 dB.

Notes: The gain can be adjusted in increments of .3 dB.

With 'sag 0' both taps are affected. If only one parameter is provided then both taps are set to the same value. If two parameters are provided, then both taps can be set to different values.

3.8.6.2 Get Analog Gain ('gag')

The `'gag'` command returns the current analog gain settings.

Syntax:	`gag <0|1|2>`	
Parameter:	`0`	Selects both taps.
	`1`	Selects tap #1.
	`2`	Selects tap #2.
Response:	`tap#1_gain tap#2_gain`	
Example:	`gag 2`	User enters command to get gain for tap #2.
	`12`	Camera responds with current setting.

3.8.7 Analog Offset

3.8.7.1 Set Analog Offset ('sao')

The `'sao'` command sets the analog offset of the camera.

Syntax:	`sao <0|1|2> <i> <j>`	
Parameter #1:	`0`	Sets both taps to the same offset or to different offsets.
	`1`	Selects tap #1.
	`2`	Selects tap #2.
Parameter #2:	`i`	The tap #1 offset setting.
Parameter #3:	`j`	The tap #2 offset setting.
Range:	`i,j`	min=0, max=255
Examples:	`sao 2 64`	Sets the offset for tap #2 to 64.
	`sao 0 64`	Sets both tap offsets to 64.
	`sao 0 32 48`	Sets tap #1 offset to 32 and tap #2 offset to 48.

3.8.7.2 Get Analog Offset ('gao')

The `'gao'` command returns the current analog offset settings.

Syntax:	`gao <0|1|2>`	
Parameter:	`0`	Selects both taps.
	`1`	Selects tap #1.
	`2`	Selects tap #2.
Response:	`tap#1_offset tap#2_offset`	
Example:	`gao 0`	User enters command to get offset for both taps.
	`32 48`	Camera responds with both current settings.

3.8.8 Dual Tap mode

3.8.8.1 Set Dual Mode ('sdm')

The `'sdm'` command sets the camera to operate in either single or dual tap mode.

Syntax:	`sdm <on|off>`	
Parameter:	`on`	Selects dual tap operation.
	`off`	Selects single tap opertion.
Example:	`sdm on`	Enables dual tap operation.

3.8.8.2 Get Dual Mode ('gdm')

The `'gdm'` command returns the current dual tap mode setting.

Syntax:	`gdm`	
Response:	`on|off`	
Example:	`gdm`	User enters command.
	`on`	Camera responds with current setting.

3.8.9 Bit Depth

3.8.9.1 Set Bit Depth ('sbd')

The `'sbd'` command sets the bit depth of the camera.

Syntax:	`sbd <8|10|12>`	
Parameter:	`8`	Selects 8 bit operation.
	`10`	Selects 10 bit operation.
	`12`	Selects 12 bit operation.
Example:	`sbd 10`	Enables 10 bit operation.

3.8.9.2 Get Bit Depth ('gbd')

The `'gbd'` command returns the current bit depth setting.

Syntax:	`gbd`	
Response:	`8|10|12`	
Example:	`gbd`	User enters command.
	`10`	Camera responds with current setting.

3.8.10 Lookup Table Operation

3.8.10.1 Set Lookup Table ('slt')

The `'slt'` command instructs the camera to perform a table lookup procedure on all pixels. The table maps a 12 bit input pixel value to a 12 bit output pixel value. The user can select to use either the User #1 or User #2 tables. The tables can be downloaded to the camera's non-volatile memory using the LynxTerminal utility (see Appendix C).

Syntax:	`slt <off|1|2>`	
Parameter:	`off`	Disable the lookup table processing.
	`1`	Enables the User #1 table mapping process.
	`2`	Enables the User #2 table mapping process.
Example:	`slt 2`	Enables the User #2 lookup table.
Notes:	Both lookup tables are stored in read/write non-volatile memory in the camera and can be modified by the user. The user #1 lookup table is pre-programmed in the factory to contain a Gamma 0.45 transfer function.	

3.8.10.2 Get Lookup Table ('glt')

The `'glt'` command returns the current lookup table setting.

Syntax:	`glt`	
Response:	`off|1|2`	
Example:	`glt`	User enters command.
	`2`	Camera responds with current setting.

3.8.10.3 Get Lookup Header ('glh')

The `'glh'` command returns the text header information in the selected lookup table.

Syntax:	`glh <1|2>`	
Response:	`Lookup table header text`	
Example:	`glh 1`	User enters command.

	`Function is Gamma 0.45`
	`Created by Imperx, Inc.`
	`Date 3/19/05`
		Camera responds with LUT header text.

3.8.11 Noise Correction processing

3.8.11.1 Set Noise Correction ('snc')

The `'snc'` command instructs the camera to perform noise correction processing on all incoming pixels. During this process, the camera averages the leading dark pixels in each line and determines what the average noise level is. It then subtracts this average noise level from subsequent valid pixels in the line. This effectively removes any dark level noise from the resultant image.

Syntax:	`snc <on|off>`	
Parameter:	`on`	Enables noise correction processing.
	`off`	Disables noise correction processing.
Example:	`snc on`	Enables noise correction.

3.8.11.2 Get Noise Correction ('gnc')

The `'gnc'` command returns the current noise correction setting.

Syntax:	`gnc`	
Response:	`on|off`	
Example:	`gnc`	User enters command. Camera responds
	`on`	with current setting.

3.8.12 Horizontal mode

3.8.12.1 Set Horizontal Mode ('shm')

The `'shm'` command configures the camera to operate in the normal, window, binning or center modes. The normal mode turns off window, binning and center modes. In the windowing mode of operation, the horizontal area of interest is defined by the `'shw'` command. Setting the binning mode instructs the camera to perform horizontal binning on all incoming pixels. During this process, the camera averages each pair of adjacent pixels in a line and then delivers the average value to the Camera Link interface. Therefore, in this mode, the number of pixels per line is reduced by one half. The center mode is only valid for the IPX-VGA210-L/G series of cameras. In this mode, the camera only delivers the central 228 pixels per line.

Syntax: `shm <n|w|b|c>`

Parameter:		
	`n`	Normal mode
	`w`	Enables horizontal window.
	`b`	Enables horizontal binning.
	`c`	Enables center mode.

Example:		
	`shm b`	Enables horizontal binning.

Notes: In the windowing mode, it is necessary to adjust the number of active pixels per line in the frame grabber to the value of x2 – x1 + 1, where x1 and x2 represent the starting and ending pixels, respectively, as defined by the `'shw'` command.

In the binning mode, it is necessary to adjust the number of active pixels per line in the frame grabber to the value of n/2, where n represents the maximum number of active pixels in a line.

In the center mode, it is necessary to adjust the number of active pixels per line in the frame grabber to the value of 228.

3.8.12.2 Get Horizontal Mode ('ghm')

The `'ghm'` command returns the current horizontal mode setting.

Syntax: `ghm`

Response: `n|w|b|c`

Example:		
	`ghm`	User enters command.
	`b`	Camera responds with current setting.

3.8.13 Vertical Mode

3.8.13.1 Set Vertical Mode ('svm')

The `'svm'` command configures the camera to operate in either the normal, windowing or binning modes. The normal mode turns off both windowing and binning. In the windowing mode of operation, the vertical area of interest is defined by the `'svw'` command. Setting the binning mode instructs the camera to perform vertical binning on all incoming pixels. During this process, the camera sums each pixel of adjacent lines in a frame and then delivers the average value to the Camera Link interface. Therefore, in this mode, the number of lines per frame is reduced by one half. Using this command increases the effective frame rate of the camera and also reduces the exposure time.

Syntax:	`svm <n|w|b>`	
Parameter:	`n`	Normal mode
	`w`	Enables vertical window.
	`b`	Enables vertical binning.
Example:	`svm w`	Enables vertical window.

Notes: In the windowing mode, it is necessary to adjust the number of active lines per frame in the frame grabber to the value of y2 – y1 + 1, where y1 and y2 represent the starting and ending lines, respectively, as defined by the `'svw'` command.

In the binning mode, it is necessary to adjust the number of active lines per frame in the frame grabber to the value of n/2, where n represents the maximum number of active lines in a frame.

3.8.13.2 Get Vertical Mode ('gvm')

The `'gvm'` command returns the current vertical mode setting.

Syntax:	`gvb`	
Response:	`n|w|b`	
Example:	`gvm`	User enters command.
	`w`	Camera responds with current setting.

3.8.14 Test Pattern generation

3.8.14.1 Set Test Mode ('gtm')

The `'stm'` command instructs the camera to enter a test mode and deliver a test pattern to the Camera Link interface. This command is useful during frame grabber configuration and when troubleshooting the camera to frame grabber interface.

Syntax:	`stm <off|1|2|3>`	
Parameter:	`off`	Disables test pattern generation.
	`1`	Enables a fixed horizontal test pattern to be generated.
	`2`	Enables a fixed vertical test pattern to be generated.
	`3`	Enables a moving vertical test pattern to be generated.
Example:	`stm 2`	Generates a fixed vertical test pattern.

3.8.14.2 Get Test Mode ('gtm')

The `'gtm'` command returns the current test mode setting.

Syntax:	`gtm`	
Response:	`off|1|2|3`	
Example:	`gtm`	User enters command.
	`2`	Camera responds with current setting.

3.8.15 Image Reversal mode

3.8.15.1 Set Image Reversal ('sir')

The `'sir'` command instructs the camera to perform image reversal. During image reversal the camera will deliver pixels, to the Camera Link interface, in the reverse order from which they were received by the CCD sensor resulting in a mirror image being displayed. This mode is useful if the camera is capturing an image that is being reflected from a mirror.

Syntax:	`sir <on|off>`	
Parameter:	`on`	Enables image reversal.
	`off`	Disables image reversal.
Example:	`sir on`	Enables image reversal.
Notes:	This feature can be used in either single or dual tap modes. It can also be used in conjunction with horizontal binning or horizontal window.	

3.8.15.2 Get Image Reversal ('gir')

The `'gir'` command returns the current image reversal setting.

Syntax:	`gtm`	
Response:	`on|off`	
Example:	`gir`	User enters command.
	`on`	Camera responds with current setting.

3.8.16 Trigger operation

3.8.16.1 Set Trigger ('str')

The `'str'` command instructs the camera to exit the free running mode of operation and to enter into a trigger mode. In the trigger mode, the camera will idle and wait for a trigger event to occur. When the trigger event occurs, the camera will begin processing images and deliver them to the Camera Link interface. The `'std'` command defines the number of frames to be processed following the trigger event.

Syntax: `str <off|cc|et> <s|f|d>`

Parameter #1:	`off`	Disables trigger mode and enable free running mode.
	`cc`	Selects the Camera Link CC1 signal as the trigger source.
	`et`	Selects the external trigger signal as the trigger source.
Parameter #2:	`s`	Selects the 'standard' trigger mode of operation.
	`f`	Selects the 'fast' trigger mode of operation.
	`d`	Selects the 'double' trigger mode of operation.
Example:	`str et s`	Enables standard external trigger mode.

Notes: Refer to section 2.5 for a detailed description of the various camera triggering modes.

3.8.16.2 Get Trigger ('gtr')

The `'gtr'` command returns the current trigger mode setting.

Syntax: `gtr`

Response: `off|cc|et s|f|d`

Example:	`gtr`	User enters command.
	`et s`	Camera responds with current setting.

3.8.16.3 Set Trigger Duration ('std')

The `'std'` command sets the number of frames to be transmitted after a trigger event occurs.

Syntax:	`std <i>`	
Parameter:	`i`	The number of frames to be transmitted after the trigger. A value between 250 and 255 indicates that the camera should free run after the trigger.
Range:	`i`	min=1, max=255
Example:	`std 6`	Sets the number for triggered frame to 6.

3.8.16.4 Get Trigger Duration ('gtd')

The `'gtd'` command returns the current trigger duration setting.

Syntax:	`gtd`	
Response:	`i`	
Example:	`gtd` `6`	User enters command. Camera responds with current setting.

3.8.16.5 Set CC Integration ('sci')

The `'sci'` command enables the CC integration mode when the trigger is set to CC. In this mode, the pulse duration of the CC1 signal determines the exposure time for the first frame after trigger.

Syntax:	`sci <on|off>`	
Parameter:	`on` `off`	Enables CC integration mode. Disables CC integration mode.
Example:	`sci on`	Enables CC integration.

3.8.16.6 Get CC Integration ('gci')

The `'gci'` command returns the current CC integration setting.

Syntax:	`gci`	
Response:	`on|off`	
Example:	`gci` `on`	User enters command. Camera responds with current setting.

3.8.16.7 *Set Pre-Exposure ('spe')*

The `'spe'` command sets the exposure time for the first frame after a trigger event when the trigger is in the 'standard' mode.. The first frame after a trigger will be exposed for the length of time specified. All subsequent frames will be exposed per the shutter setting (set by the `'sst'` command).

Syntax:	`spe <i>`	
Parameter:	`i`	The exposure time in units of uSeconds.
Range:	`i`	min=10, max=655,350
Example:	`spe 150`	Sets the pre-exposure to 150 uSeconds.

Notes: The pre-exposure operates in increments of 10 uSeconds and therefore will round the least significant digit entered.

Notes: The pre-exposure is typically used when a single frame, with a defined exposure, is to be captured following a trigger event.

3.8.16.8 *Get Pre-Exposure ('gpe')*

The `'gpe'` command returns the current pre-exposure setting.

Syntax:	`gpe`	
Response:	`i`	
Example:	`gpe`	User enters command.
	`150`	Camera responds with current setting.

3.8.16.9 *Set Double Exposure ('sde')*

The `'sde'` command sets the exposure time for the first frame after a trigger event when the trigger is in the 'double' mode. The first frame after a trigger will be exposed for the length of time specified. All subsequent frames will be exposed per the shutter setting (set by the `'sst'` command).

Syntax:	`sde <i>`	
Parameter:	`i`	The exposure time in units of uSeconds.
Range:	`i`	min=1, max=65,535
Example:	`sde 400`	Sets the double exposure to 400 uSeconds.
Notes:	The double exposure operates in increments of 1 uSecond.	

3.8.16.10 *Get Double Exposure ('gde')*

The `'gde'` command returns the current double exposure setting.

Syntax:	`gde`	
Response:	`i`	
Example:	`gde`	User enters command.
	`400`	Camera responds with current setting.

3.8.17 Negative Image mode

3.8.17.1 Set Negative Image ('sni')

The `'sni'` command instructs the camera to perform image inversion. During image inversion, the camera will perform a one's compliment on all pixels before delivering them to the Camera Link interface resulting in a negative image being displayed. This mode is useful if the camera is capturing an image from photographic negatives or micro-film.

Syntax:	`sni <on|off>`	
Parameter:	`on`	Enables negative image processing.
	`off`	Disables negative image processing.
Example:	`sni on`	Enables image inversion.

3.8.17.2 Get Negative Image ('gni')

The `'gni'` command returns the current negative image setting.

Syntax:	`gni`	
Response:	`on|off`	
Example:	`gni`	User enters command.
	`on`	Camera responds with current setting.

3.8.18 Temperature Monitoring

3.8.18.1 Get Current Temperature ('gct')

The `'gct'` command returns the current temperature of the camera. The temperature is in increments of .25 degrees C.

Syntax:	`gct`	
Response:	`i`	Camera temperature in degrees centigrade
Example:	`gct` `42.00`	User enters command. Camera responds with current temperature.

3.8.18.2 Set Temperature Alarm ('sta')

The `'sta'` command instructs the camera to continuously monitor its ambient temperature and generate an alarm if the temperature exceeds a user defined threshold.

When the camera's temperature reaches the alarm threshold, then a message will be sent to the Camera Link's serial interface.

Syntax:	`sta <on|off>`	
Parameter:	`on` `off`	Enables temperature monitoring. Disables temperature monitoring.
Example:	`sta on`	Instructs the camera to enable temperature monitoring.

3.8.18.3 Get Temperature Alarm ('gta')

The `'gta'` command returns the current temperature alarm setting.

Syntax:	`gta`	
Response:	`on|off`	
Example:	`gta` `on`	User enters command. Camera responds with current setting.

3.8.18.4 *Set Temperature Threshold ('stt')*

The `'stt'` command defines the 'on' and 'off' temperature thresholds that will trigger the camera to send temperature warnings. The thresholds are in increments of 1 degrees C. If the camera's ambient temperature exceeds the 'on' temperature threshold, then the camera will send a 'Warning set – high temperature' message to the Camera Link's serial interface. The camera will subsequently send a 'Warning cleared – high temperature' message when the temperature falls below the 'off' temperature threshold. The camera monitors these thresholds and generates the warnings only when enabled via the `'sta'` command.

Syntax:	`stt <t1> <t2>`	
Parameter:	`t1`	'On' threshold in degrees C.
	`t2`	'Off' threshold in degrees C.
Example:	`stt 55 48`	Instructs the camera to generate a 'Warning set – high temperature' message when the temperature exceeds 55C and a 'Warning cleared – high temperature' when it reaches 48C.

3.8.18.5 *Get Temperature Threshold ('gtt')*

The `'gtt'` command returns the current temperature threshold settings.

Syntax:	`gtt`	
Response:	`t1 t2`	
Example:	`gtt`	User enters command.
	`55 48`	Camera responds with current setting.

3.8.19 Programmable Frame Rate

3.8.19.1 Set Frame Rate ('sfr')

The `'sfr'` command instructs the camera to throttle the camera frame rate from the current free-running rate to a slower rate. This command is useful when the user wishes to reduce the amount of bandwidth required on the Camera Link interface. When the shutter is disabled, the exposure time will be determined by 1/frame rate. Otherwise, the shutter setting will determine the exposure time.

Syntax:	`sfr <off|i>`	
Parameter:	`off`	Disables the programmable frame rate.
	`i`	The frame rate in units of frames per second.
Range:	`i`	min=2, max=3000
Example:	`sfr 75`	Sets the frame rate to 75 fps.
Notes:	The programmable frame rate can only be used to reduce the current free-running frame rate. It cannot be used to increase the frame rate. In order to increase the frame rate, vertical AOI must be utilized.	

3.8.19.2 Get Frame Rate ('gfr')

The `'gfr'` command returns the current programmable frame rate setting.

Syntax:	`gfr`	
Response:	`off|i`	
Example:	`gfr`	User enters command.
	`76`	Camera responds with current setting.

3.8.19.3 *Set Frame Time ('sft')*

The `'sft'` command instructs the camera to throttle the camera frame rate from the current free-running rate to a slower rate. This command is useful when the user wishes to reduce the amount of bandwidth required on the Camera Link interface. When the shutter is disabled, the exposure time will be determined by the frame time. Otherwise, the shutter setting will determine the exposure time.

Syntax:	`sft <off|i>`	
Parameter:	`off`	Disables the programmable frame rate.
	`i`	The frame time in units of uSeconds.
Range:	`i`	min=333, max=500000
Example:	`sfr 10000`	Sets the frame rate to 10 mSec.

3.8.19.4 *Get Frame Time ('gft')*

The `'gft'` command returns the current programmable frame time setting.

Syntax:	`gft`	
Response:	`off|i`	
Example:	`gft`	User enters command.
	`10000`	Camera responds with current setting.

Notes: The programmable frame rate and frame time can only be used to reduce the current free-running frame rate. It cannot be used to increase the frame rate. In order to increase the frame rate, vertical AOI must be utilized.

3.8.20 Current Speed and Exposure

3.8.20.1 Get Camera Speed ('gcs')

The `'gcs'` command returns the measured operating speed (frame rate) of the camera. The current operating speed is determined by a number of settings (see note below). The camera is capable of measuring the current frame rate in all modes of operation.

Syntax:	`gcs`	
Response:	`i`	The current operating speed of the camera in frames per second.
Example:	`gcs`	User enters command.
	`75.00`	Camera responds with current speed.

Notes: The following settings affect the camera's speed:

Single/dual tap mode
Vertical window
Vertical binning
Horizontal center (IPX-VGA210 only)
Programmable Frame Rate
Long Integration

After issuing a command that affects the camera's speed, the user must wait at least one frame time before issuing the 'gcs' command.

3.8.20.2 *Get Camera Exposure ('gce')*

The `'gce'` command returns the measured exposure (integration) time of the camera. The current exposure time is determined by a number of settings (see note below). The camera is capable of measuring the current exposure time in all modes of operation.

Syntax:	`gce`	
Response:	`i`	The current exposure time in units of uSeconds.
Example:	`gce`	User enters command.
	`13333`	Camera responds with current exposure time.

Notes: The measured exposure time is typically the reciprocal of the current camera speed (1/Camera Speed) unless the shutter is enabled. If the shutter is enabled, then it determines the camera exposure time.

The following settings affect the camera's exposure time:

Single/dual tap mode
Vertical window
Vertical binning
Horizontal center (IPX-VGA only)
Programmable Frame Rate
Long Integration
Shutter

After issuing a command that affects the camera's exposure time, the user must wait at least one frame time before issuing the 'gce' command.

3.8.21 Defective Pixel Correction

3.8.21.1 Set Defect Correction (*'sdc'*)

The `'sdc'` command instructs the camera to perform defective pixel correction processing on the entire frame. During this process, as the camera process each pixel it looks up the pixel's location in the on-board Defective Pixel Map (stored in non-volatile memory). If there is a hit, then the camera will correct the defective pixel. This effectively removes any defective pixels from the resultant image.

Syntax:	`sdc <on|off>`	
Parameter:	`on`	Enables defect correction processing.
	`off`	Disables defect correction processing.
Example:	`sdc on`	Enables defect correction.

3.8.21.2 *Get Defect Correction (*'gdc'*)*

The `'gdc'` command returns the current defect correction setting.

Syntax:	`gdc`	
Response:	`on|off`	
Example:	`gdc`	User enters command.
	`on`	Camera responds with current setting.

3.8.21.3 *Dump Pixel Map (*'dpm'*)*

The `'dpm'` command returns the contents of the Defective Pixel Map stored in non-volatile memory.

Syntax:	`dpm`
Response:	`listing of defective pixels ( Column and Row coordinates ).`

3.8.22 Flat Field Correction

3.8.22.1 Set Flatfield Correction ('sfc')

The `'sfc'` command instructs the camera to perform the Flat Field correction procedure. During this procedure, the camera reads a set of Flat Field coefficients from on-board non-volatile memory. It uses these coefficients to compensate for any variations in the pixel responsivity. The Flat Field coefficients table can be downloaded to the camera's non-volatile memory using the LynxTerminal utility (see Appendix C).

Syntax: `sfc <on|off>`

Parameter:

`on`	Enable Flat Field correction processing.
`off`	Disable Flat Field correction processing.

Example:

`sfc on`	Enable Flat Field correction.

Notes: Flat Field correction is not supported in the IPX-VGA120, IPX-VGA210 and IPX-1M48 cameras.

The Flat Field table is loaded into the same non-volatile memory as LUT #2.

Flat field and lookup table processing are mutually-exclusive in all cameras except the IPX-11M5 and IPX-16M3. In the IPX-11M5 and IPX-16M3, both the flat field and LUT #1 can be enabled simultaneously.

3.8.22.2 Get Flatfield Correction ('gfc')

The `'gfc'` command returns the current flat field correction setting.

Syntax: `gfc`

Response: `on|off`

Example:

`gfc`	User enters command.
`on`	Camera responds with current setting.

3.8.22.3 Get Flatfield Header ('gfh')

The `'gfh'` command returns the text header information in the Flat Field table.

Syntax: `gfh`

Response: `Flat Field table header text`

Example:

`gfh`	User enters command.

`Flat Field Coefficients`
`IPX-11M5LMFN -090538`
`Date 2/19/06`
	Camera responds with Flat Field header text.

Chapter 4

LYNX Configurator for CameraLink

This chapter provides a quick reference to using the Lynx Configurator camera configuration utility for the Camera Link series of Lynx cameras.

4.1 Overview

The LYNX Configurator is provided with each Camera Link camera. This tool communicates with the camera, via the frame grabber's Camera Link serial interface. It allows the user to configure the camera's operating mode and to create, load and save camera configuration profiles. The profiles can be saved to, or loaded from, either a file on the host computer or non-volatile memory within the camera. The configuration utility includes an interactive help file, which will guide you through the camera setup.

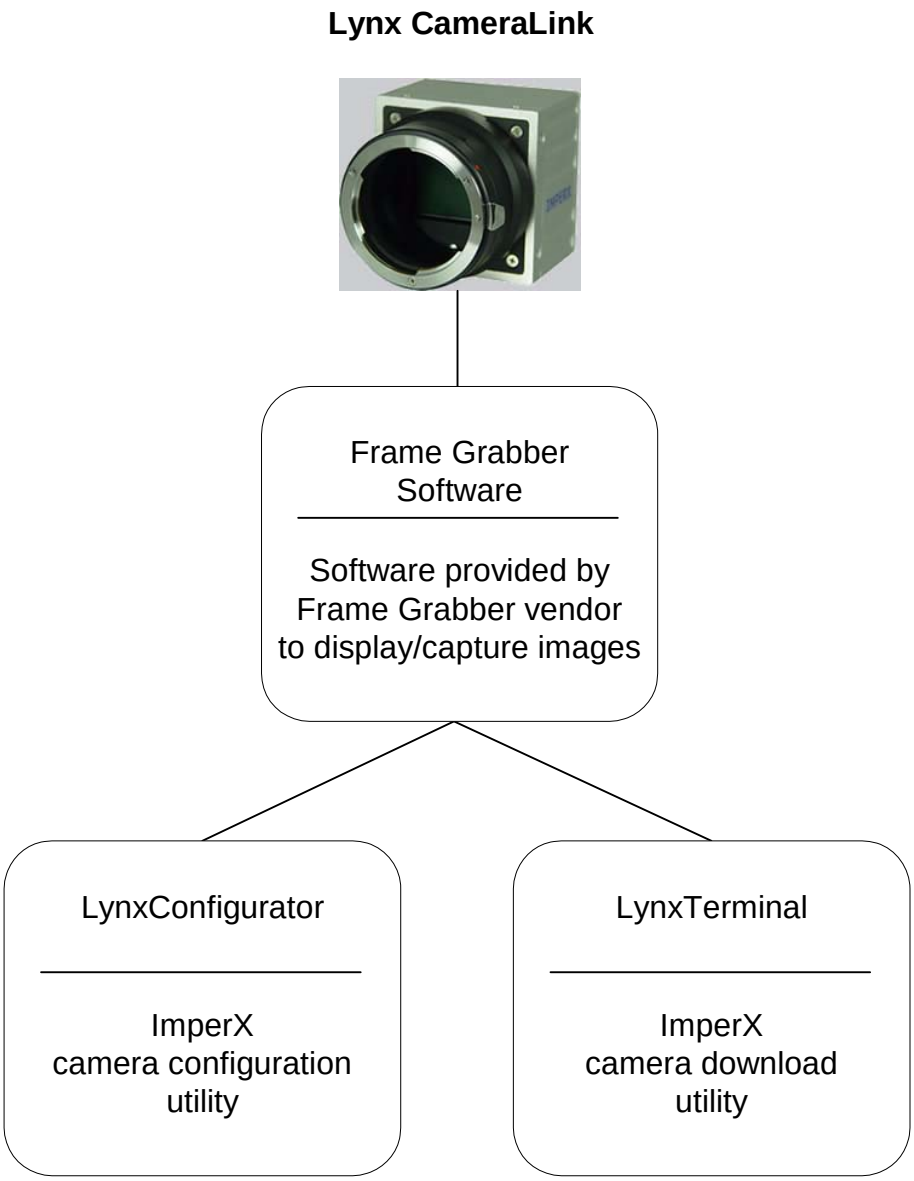

Figure 4.1 - LYNX CameraLink Interface

4.2 Setup

Camera interfacing is relatively simple. Prior to connecting the camera make sure that the LYNX Configurator is properly installed. For more information on software installation, refer to Appendix D of this manual.

1. Make sure that the camera is powered on (the green LED on the back is lit) and that the Camera Link cable is connected.
2. Make sure that the frame grabber of choice is properly installed.
3. Click on the LYNX Configurator icon. Often times multiple frame grabbers and cameras may be installed into a computer at the same time. The LYNX Configurator utility provides an intelligent, automated method of 'discovering' these components and allowing the user to select the one that he is interested in using. When the LYNX Configurator utility is run, it will search the system32 folder for all files which match the clser***.dll naming convention (per the Camera link specification). For each file that it finds, it will open the .DLL and determine how many ports the .DLL supports. It will also find any available COM port installed on the PC. It will then communicate with each port (.DLL and COM) and attempt to query the attached camera (if any). If it finds an attached Imperx camera, it will read the 'camera type' information from the camera. It will then display a list box, which includes all DLLs, ports and cameras that it discovered. The user can then select the DLL/port/camera, of interest, by highlighting the entry and clicking on the 'OK' button. Clicking on the 'Rescan Ports' button causes the above discovery procedure to be repeated.

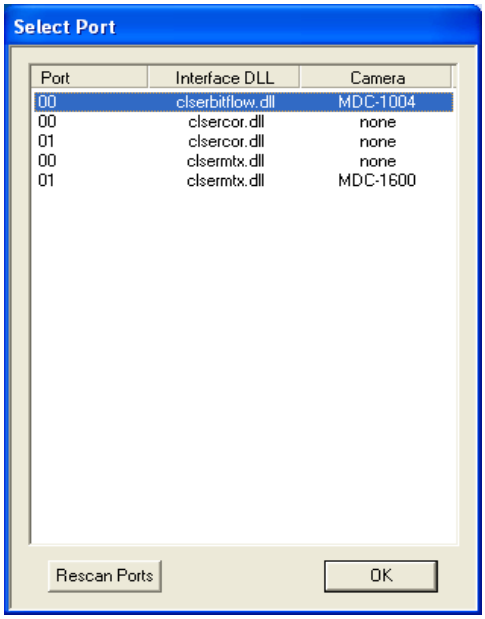

Figure 4.2 - Select Port dialog

4. After having selected the desired camera, the main LYNX Configurator dialog will appear. The graphical user interface is very intuitive and self-explanatory. The configuration utility includes an interactive help file, which will guide you through the GUI controls and camera settings.
5. The user can also reveal a small 'Terminal Dialog' window by clicking on 'Help' and then 'Show/Hide Terminal' – as shown on Figure 4.10. Each time the user changes a camera setting via the GUI's controls, the resultant camera command and response strings will be displayed in this terminal. The user can also enter commands directly into the terminal, which also results in the GUI controls being updated automatically.

4.3 Graphical User Interface

The LYNX Configurator is a graphical user interface (GUI) containing six main panels (tabs):

- AOI (Area Of Interest)
- Trigger
- Video Amp
- Exposure
- Strobe
- Auto Iris

This section gives a brief description of the different panels and highlights the main camera configuration options. Please refer to Section 2 of this manual for a detailed description of the camera features.

4.3.1 Area of Interest (AOI) Tab

The AOI tab is used to modify the active image area. As shown in Figure 4.3, there are separate controls for horizontal and vertical windows.

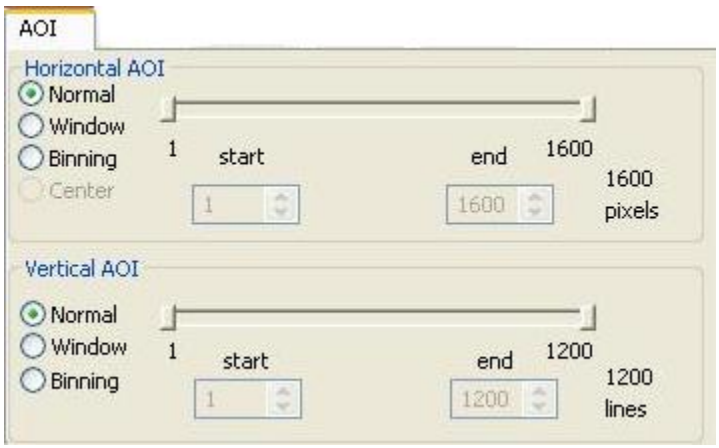

Figure 4.3 - Area of Interest Tab

HORIZONTAL AOI

Normal: When enabled, the imager has full horizontal resolution.

Window: When enabled, the user can set the horizontal resolution using the sliders or by entering the desired start and end values.

Binning: When enabled, the image has half horizontal resolution.

Center: When enabled, the center (fast) mode is activated. This feature is only available on the IPX-VGA210L/G.

VERTICAL AOI

Normal: When enabled, the imager has full vertical resolution.

Window: When enabled, the user can set the vertical resolution using the sliders or by entering the desired start and end values.

Binning: When enabled, the image has half vertical resolution.

4.3.2 Trigger Tab

The Trigger tab, shown in Figure 4.4, is used to set the different triggering modes.

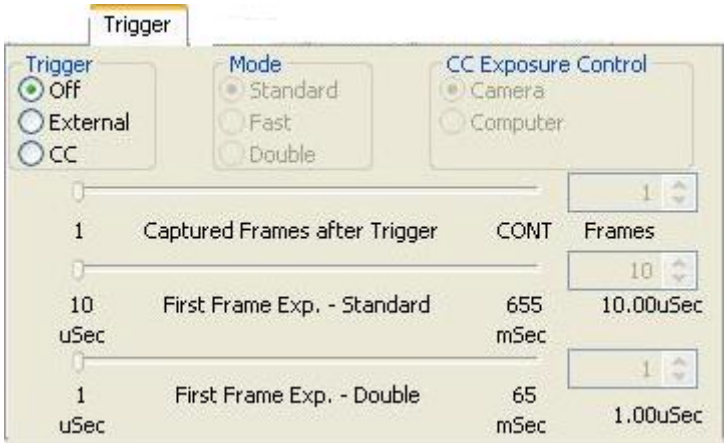

Figure 4.4 - Triggering Tab

TRIGGER – selects the trigger source.

Off: When enabled, the camera is free running.

External: When enabled, the camera is set to triggering mode, and is expecting the trigger signal from the external source (via the connector on the back).

CC: When enabled, the camera is set to triggering mode, and is expecting the trigger signal from the computer (via the camera link cable's CC1 signal).

MODE – selects the trigger mode.

Standard: When enabled, the camera is set to standard triggering mode. The user can set the number of frames captured via the "Captured Frames after Trigger" slider. The user can also set the exposure time for the fist frame via the "First Frame Exp. – Standard" slider.

Fast: When enabled, the camera is set to fast triggering mode. A frame is captured upon receiving a trigger signal.

Double: When enabled, the camera is set to double triggering mode. Upon receiving a trigger signal the camera captures two frames. The exposure for the first frame is user programmable via the "First frame Exp. - Double" slider.

CC EXPOSURE CONTROL - CC Exposure control is active only if the camera is set to "CC trigger".

Camera: When enabled, the user can also set the exposure time for the first frame via the "First Frame Exp. – Standard" slider.

Computer: When enabled, the exposure for the first frame is determined by the duration (active high) of the trigger pulse.

4.3.3 Video Amp Tab

Using the Video Amp tab the user can control the gain and offset for each camera channel, as shown in Figure 4.5.

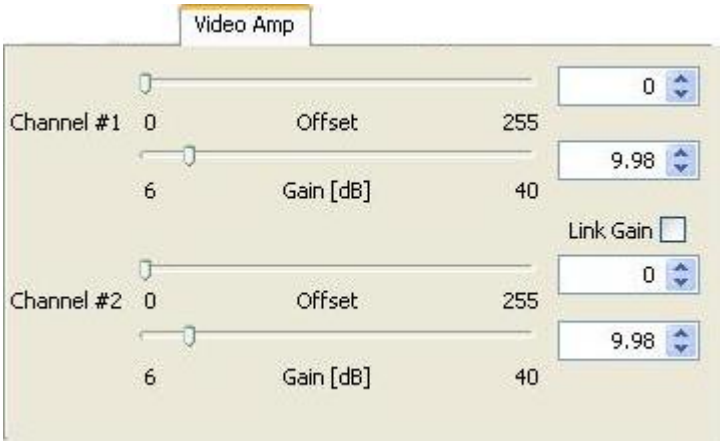

Figure 4.5 - Video Amplifiers Tab.

Channel #1: The user can set the desired gain and offset for channel 1 via the sliders or by entering the desired values.

Channel #2: The user can set the desired gain and offset for channel 2 via the sliders or by entering the desired values.

Link Gain: When enabled, the gain sliders for both channels are linked together. If there is a gain difference between the channels, this difference will be preserved.

4.3.4 Auto Iris Tab

Auto Iris Tab controls the auto iris feature – Figure 4.6

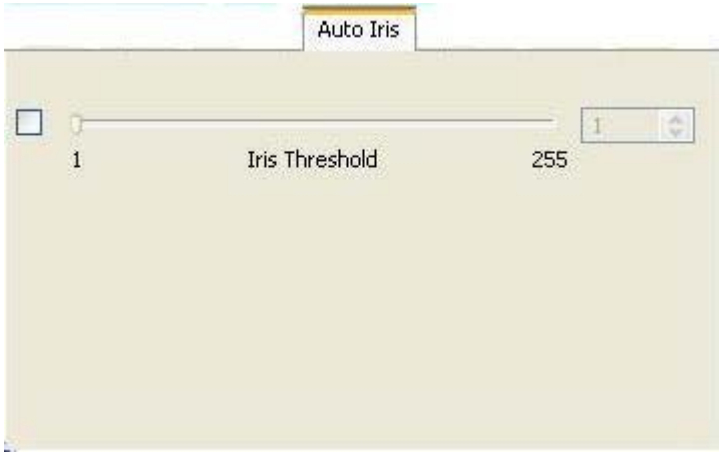

Figure 4.6 - Auto Iris Tab

Iris Threshold: When enabled, the user can set the iris threshold (brightness of the image) via the slider or by entering the desired value.

4.3.5 Exposure Tab

Exposure Tab controls the camera exposure – Figure 4.7.

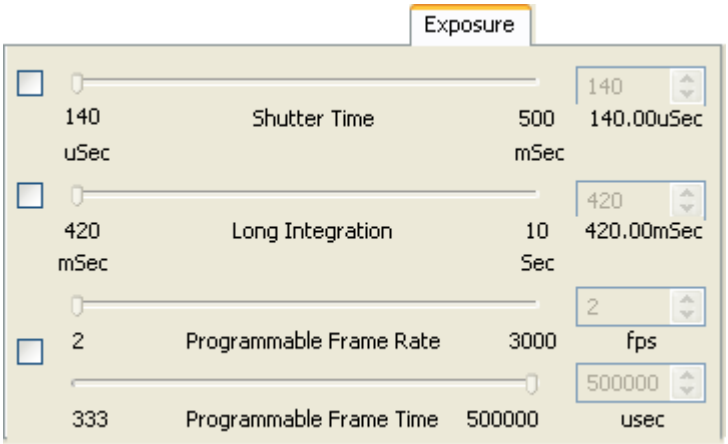

Figure 4.7 - Exposure Tab

Shutter Time: When enabled, the user can set the camera integration time via the slider or by entering the desired value. This feature is used to shorten the camera integration.

Long Integration: When enabled, the user can set the camera to Long Integration mode. The integration time can be programmed via the slider or by entering the desired value. This feature is used to extend the camera integration.

Programmable Frame Rate: When enabled, the user can set the camera frame rate in units of frames/sec via the Frame Rate slider or by entering the desired value. This feature is used to reduce the camera speed while preserving the image resolution.

Programmable Frame Time: When enabled, the user can set the camera frame rate in units of time via the Frame Time slider or by entering the desired value. This feature is used to reduce the camera speed while preserving the image resolution.

4.3.6 Strobe Tab

Strobe Tab controls the strobe output position – Figure 4.8.

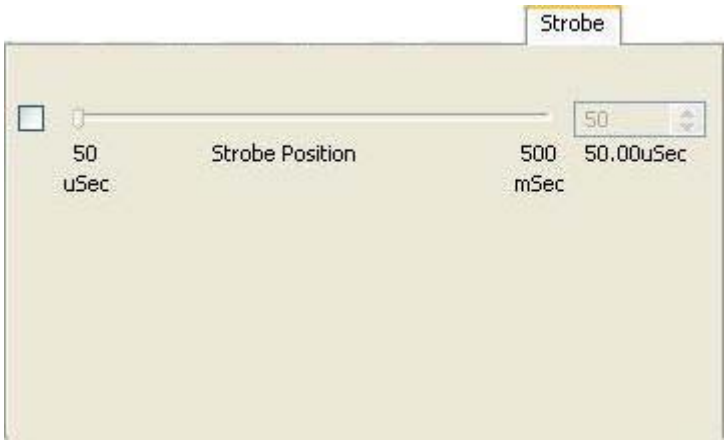

Figure 4.8 - Strobe Tab

Strobe Position: When enabled, the user can set the strobe output position relative to the end of the integration, via the slider or by entering the desired value.

4.3.7 Common Controls

All panels in the LYNX Configurator share the same general control options and menus for "File", "Boot", "Test Mode" and "Help" – Figure 4.9.

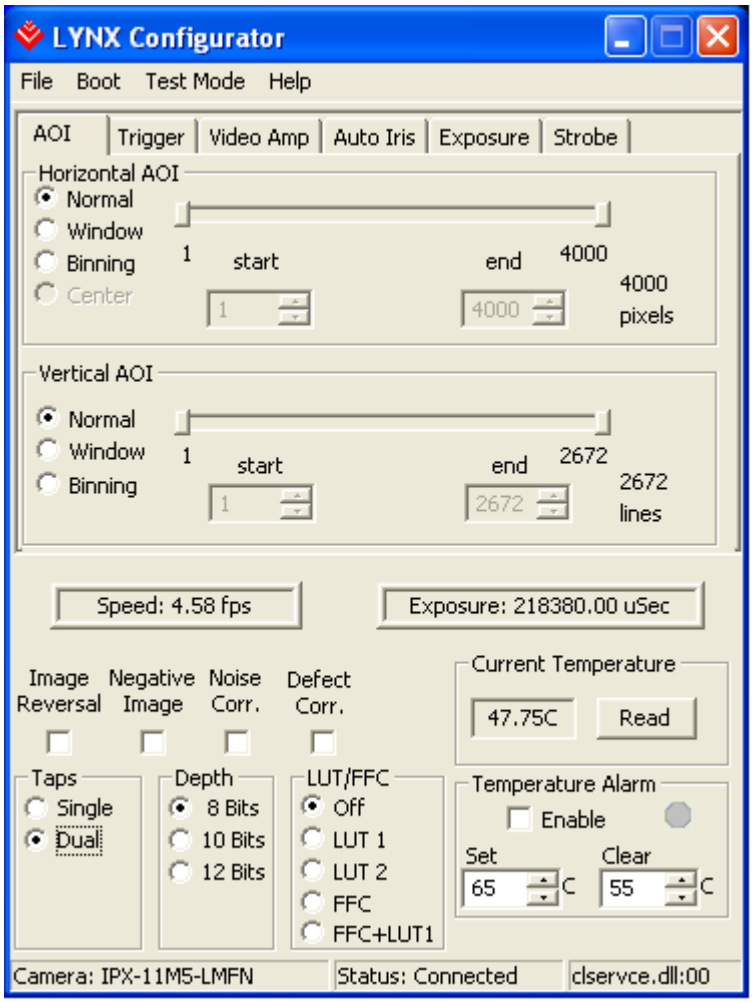

Figure 4.9 – LYNX Configurator main dialog.

FILE MENU

Load from File:	Loads the camera registers from a saved configuration file.
Load from Workspace:	Loads the LYNX Configurator GUI with the current status of the camera registers.
Load from Factory:	Loads the camera registers and LYNX Configurator GUI with the original (factory) settings.
Load from User Space #1:	Loads the camera registers and LYNX Configurator GUI with a saved camera settings in the user space 1.
Load from User Space #2:	Loads the camera registers and LYNX Configurator GUI with a saved camera settings in the user space 2.
Save to File:	Saves the camera registers to a configuration file.
Save to Work Space:	Saves the current LYNX Configurator GUI settings to the camera registers.
Save to Factory:	Saves the current LYNX Configurator GUI settings to the camera factory space. Note that this space is password protected.
Save to User Space #1:	Saves the current LYNX Configurator GUI settings to the camera User 1 space.
Save to User Space #2:	Saves the current LYNX Configurator GUI settings to the camera User 2 space.
Select Port:	Selects a communication port.
Select Camera:	Selects a camera from the list of the available cameras.
Exit:	Closes the LYNX Configurator program.

BOOT MENU - This menu selects the 'Boot From' source. Upon power up, the camera will load its registers from the selected 'Boot From' source.

From Factory Settings:	The camera loads the original (factory) settings.
From User Settings 1:	The camera loads the settings saved in User 1 space.
From User Settings 2:	The camera loads the settings saved in User 2 space.

TEST MODE MENU – This menu select the test pattern generator.

Fixed pattern 1:	Selects the fixed test pattern 1.
Fixed pattern 2:	Selects the fixed test pattern 2.
Moving pattern:	Selects the moving test pattern.

HELP MENU

Open Help:	This command displays the help file.
About:	This command will display the important camera manufacturing information.
Debug Dialog:	This command displays a separate communications debug window.
Show/Hide Terminal:	This command will display/hide the LYNX Terminal Dialog Window – Figure 4.10

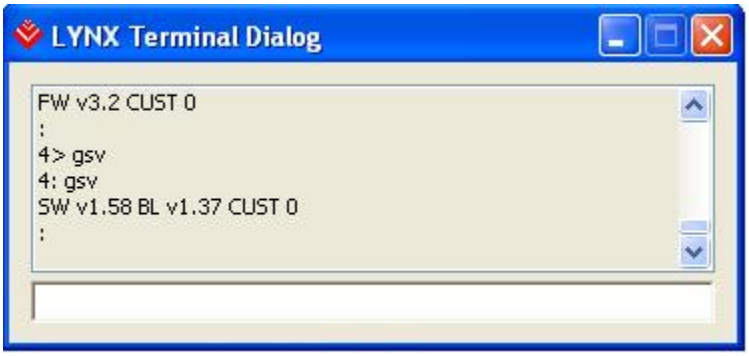

Figure 4.10 - LYNX Terminal Dialog Window.

Dump Defect Pixels:	This command will display a listing of the contents of the Defective Pixel Correction table in non-volatile memory.

COMMON CONTROLS and DISPLAYS

Taps - Selects the camera output format.

Single:	Sets the camera to a single output mode.
Dual:	Sets the camera to a dual output mode

Depth - Selects the output bit depth.

8 bit :	Sets the output to 8 bit
10 bit :	Sets the output to 10 bit
12 bit :	Sets the output to 12 bit

LUT/FFC - Enables the use of the built in look-up tables (LUT) or Flat Field Correction table.

Off :	Disables the use of LUT.
LUT 1:	Enables the use of LUT #1.
LUT 2:	Enables the use of LUT #2.
FFC:	Enables the use of Flat Field Correction table.
FFC/LUT1:	Enables the use of Flat Field Correction table and LUT #1 simultaneously.

Current Temperature Read:	When clicked on displays the current internal camera temperature.
Temperature Alarm:	When enabled turns on temperature alarm monitoring. The user can enter the SET/RESET values.
Image Reversal:	When enabled turns on the image reversal feature.
Negative Image:	When enabled turns on the negative image feature.
Noise Corr.:	When enabled turns on the noise correction feature.
Defect Corr.:	When enabled turns on the defect correction feature.
Speed Window:	Displays the current camera speed (it is not active in trigger mode).
Exposure Window:	Displays the current camera exposure (it is not active in trigger mode).

Chapter 5

LYNX Interface Application for GigE

This chapter discusses the LYNX GigE interface software.

5.1 Overview

The Lynx GigE Interface Application is provided with each GigE camera. The application tool displays/captures images from the camera as well as communicates with the camera for the purpose of configuring its operating parameters. Prior to connecting the camera make sure that the LYNX GigE application and high performance driver are properly installed. The high performance driver is optimized to work with the family of "Intel Pro1000 NIC" cards. For more information on GigE software installation, refer to Appendix E of this manual.

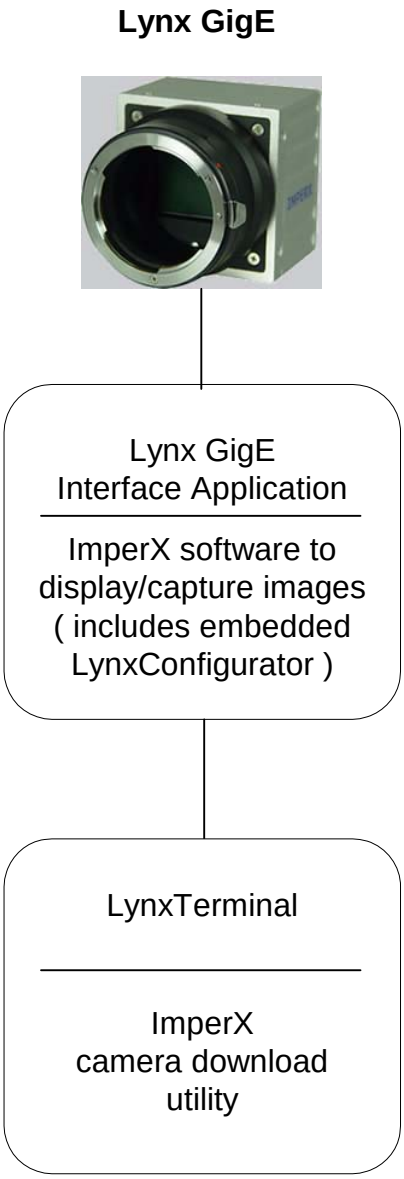

Figure 5.1 - LYNX GigE Interface.

5.2 Setup

1. Make sure that LYNX GigE Application and LYNX GigE high performance driver are properly installed. For more information on GigE software and driver installation, refer to Appendix E of this manual.
2. Make sure that camera is powered on (the green LED on the back is lit) and that the cable is connected.
3. Click on Detect button in "Device Tab". The device finder window shown in figure 5.2 will appear.
4. Select the high performance driver and click OK.
5. A new window with the IP address will appear. Click OK, and the window will close. Click OK in the main device finder window.
6. Click on "Select Camera" and select the connected camera.
7. Click on Acquisition tab and click "Start" in Acquisition Control. You should see an image. To stop the image acquisition – click on the "Stop" button.
8. To access the camera features, click on the "LYNX Configurator" tab and select the settings you wish to modify.

5.3 Graphical User Interface

For a detailed description of the LYNX GigE Interface Application's graphical user interface (GUI) please refer to the "LYNX GigE Software User's Manual". For software installation instructions, refer to Appendix E of this manual.

Chapter 6

Lynx Warranty and Support

This chapter discusses the camera's warranty and support.

6.1 ORDERING INFORMATION

		1	2	3	4	5	6	7	8	9	10
FAMILY NAME	I P X -										
	Feature List										
BASE CAMERA MODEL	640 x 480, 110FPS	V	G	A	1	2	0				
	640 x 480, 210FPS	V	G	A	2	1	0				
	1000 x 1000, 48FPS	1	M	4	8	-	-				
	1600 x 1200, 30FPS	2	M	3	0	-	-				
	1920 x 1080, 30FPS	2	M	3	0	H	-				
	2048 x 2048, 15FPS	4	M	1	5	-	-				
	2048 x 2048, 15FPS Thermally Cooled	4	M	1	5	T	-				
	4000 x 2672, 5FPS	1	1	M	5	-	-				
	4000 x 2672, 5FPS Thermally Cooled	1	1	M	5	T	-				
	4872 x 3248, 3FPS	1	6	M	3	-	-				
	4872 x 3248, 3FPS Thermally Cooled	1	6	M	3	T	-				
INTERFACE TYPE	Lynx Camera Link							L			
	Lynx Gig-E							G			
SENSOR TYPE	Monochrome								M		
	Color								C		
	UV (Glassless) with Micro lens *								W		
	UV (Glassless) without Micro lens *								U		
	UV Quartz without Micro lens *								X		
	Quartz *								Q		
	Special *								S		
	Deep UV (2M30 only)*								D		
	C-Mount: Not available with 11Meg and 16Meg										
MOUNT TYPE	C-Mount									C	
	F-Mount									F	
	T-Mount *									T	
	Open Frame									O	
OPTIONS:	No Auto Iris / Silver Housing										N
	No Auto Iris / Finned Housing										B
	Auto Iris / Finned Housing										Z
	Auto Iris / Silver Housing										I

Silver Housing Standard on Lynx VGA120, VGA210, 1 Meg, 2 Meg & 4 Meg

Finned Housing Standard on All Gig-E & TEC Camera's, IPX-11M5-L & IPX-16M3-L

NOTE: For any other custom camera configurations, please contact Imperx, Inc.

6.2 TECHNICAL SUPPORT

Each camera is fully tested before shipping. If for some reason the camera is not operational after power up please check the following:

1. Check the power supply and all I/O cables. Make sure that all the connectors are firmly attached.
2. Check the status LED and verify that is steady ON, if not – refer to the LED section.
3. Enable the test mode and verify that the communication between the frame grabber and the camera is established. If the test pattern is not present, power off the camera, check all the cabling, frame grabber settings and computer status.
4. If you still have problems with the camera operation, please contact technical support at:

Email: techsupport@imperx.com
Toll Free (866) 849-1662 or (+1) 561-989-0006
Fax: (+1) 561-989-0045
Visit our Web Site: www.imperx.com

6.3 WARRANTY

Imperx warrants performance of its products and related software to the specifications applicable at the time of sale in accordance with Imperx' s standard warranty, which is 1 (one) year parts and labor. **FOR GLASSLESS CAMERAS THE CCD IS NOT COVERED BY THE WARRANTY.**

Do not open the housing of the camera. Warranty voids if the housing has been open or tampered.

IMPORTANT NOTICE

This camera has been tested and complies with the limits of Class A digital device, pursuant to part 15 of the FCC rules.

IMPERX PRODUCTS ARE NOT DESIGNED, INTENDED, AUTHORIZED, OR WARRANTED TO BE SUITABLE FOR USE IN LIFE-SUPPORT APPLICATIONS, DEVICES OR SYSTEMS OR OTHER CRITICAL APPLICATIONS, WHERE MALFUNCTION OF THESE PRODUCTS CAN REASONABLY BE EXPECTED TO RESULT IN PERSONAL INJURY. IMPERX CUSTOMERS USING OR SELLING THESE PRODUCTS FOR USE IN SUCH APPLICATIONS DO SO AT THEIR OWN RISK AND AGREE TO FULLY INDEMNIFY IMPERX FOR ANY DAMAGES RESULTING FROM SUCH IMPROPER USE OR SALE.

Appendix A

Camera Configuration Reference

This appendix provides a quick reference to the camera configuration commands and responses.

A.1 General Commands

Command	Syntax	Parm	String returned	Description
Help	**h**			Displays a list of all commands.
Help specific	**h**	cmd		Displays the description and syntax for the specified command.
Get Work Space	**gws**	d	various	Returns a listing of all camera parameters. d=returns debug listing
Reset camera	**rc**			Resets the camera and causes it to load its workspace from the space specified by the 'Boot From' variable.
Set Echo Mode	**sem**	on|off		Enable the echo mode. When echo is enabled, the camera will echo all received characters back to the user. Camera echo mode should be disabled if the user is using a terminal emulator that has auto-echo enabled.
Get Echo Mode	**gem**		on|off	Returns the current state of the camera echo mode.
Set Supervisor Mode	**ssm**	on|off		Places the camera into the supervisor mode allowing access to certain restricted commands. Following receipt of this command, the camera will prompt the user to enter a password. **This is intended for use by service personnel only**.
Get Supervisor Mode	**gsm**		on|off	Returns the current supervisor mode status of the camera.
Set Boot From	**sbf**	f|u1|u2		Sets the location in EEPROM from which the camera should initialize itself following a power cycle or RC command: f = factory space u1 = user #1 space u2 = user #2 space
Get Boot From	**gbf**		f|u1|u2	Returns the current 'Boot From' setting: f = factory space u1 = user #1 space u2 = user #2 space
Load From Factory	**lff**			Camera loads workspace registers from EEPROM factory space
Load From User	**lfu**	1|2		Camera loads workspace registers from EEPROM user space: 1 = user #1 space 2 = user #2 space
Save to User	**stu**	1|2		Camera writes workspace registers to EEPROM user space: 1 = user #1 space 2 = user #2 space

Table A.1 – General commands

A.2 Retrieving Manufacturing Data

Command	Syntax	String returned	Description
Get Manufacturing Data	**gmd**	various	Returns all MFG Data.
Get Model Number	**gmn**	various	Returns camera model number.
Get Assembly Number	**gan**	various	Returns the camera assembly number.
Get Firmware Version	**gfv**	various	Returns FPGA firmware version number.
Get Software Version	**gsv**	various	Returns RISC software and boot loader version numbers.

Table A.2 – Retrieving manufacturing data

A.3 Retrieving Camera Performance

Command	Syntax	String returned	Description
Get Camera Speed	**gcs**	i	Returns the current operating speed (frame rate) of the camera: i = camera speed in frames per second
Get Camera Exposure	**gce**	i	Returns the current exposure (integration) time of the camera: i = exposure time in uSeconds

Table A.3 – Retrieving camera performance

A.4 Restricted Commands

(Note: these are only available in supervisor mode)

Command	Syntax	Parm#1	Parm#2	String Returned	Description
Save to Factory	**stf**				Camera writes workspace registers to EEPROM factory space.
Set Manufacturing Data	**smd**	Note1			Programs the MFG data area of the camera.
Poke	**poke**	addr	data		Register level write for debug purposes. The address and data parameters are 16 bit hexadecimal values.
Peek	**peek**	addr		data	Register level read for debug purposes. The address parameter is a 32 bit hexadecimal value. This command returns a 16 bit hexadecimal read data.

Table A.4 – Restricted commands

Note1: Parameters are "assembly#" "assy serial #" "ccd serial#" "mfg date" "model name"

For example: smd "ASSY-0074-0001-RA01" "111111" "222222" "03/23/05" "IPX-VGA210-L"

A.5 Configuring Workspace Settings

Operating Modes				
Command	**Syntax**	**Parm#1**	**Parm#2**	**Description**
Set Bit Depth	**sbd**	8|10|12		Sets the camera bit depth
Set Dual Mode	**sdm**	on|off		Enables dual tap operation: off = single tap mode on = dual tap mode
Set Lookup Table	**slt**	off|1|2		Enables lookup table processing: off = disabled 1 = user #1 lookup table 2 = user #2 lookup table
Set Noise Correction	**snc**	on|off		Enables noise correction
Set Image Reversal	**sir**	on|off		Enables image reversal
Set Negative Image	**sni**	on|off		Enables negative image
Set Test Mode	**stm**	off|1|2|3		Turns on the test pattern generator: off = disabled 1 = fixed horizontal pattern 2 = fixed vertical pattern 3 = moving vertical pattern
Set Defect Correction	**sdc**	on|off		Enables defective pixel correction
Set Flatfield Correction	**sfc**	on|off		Enables flat field correction

Area of Interest				
Command	**Syntax**	**Parm#1**	**Parm#2**	**Description**
Set Horizontal Window	**shw**	x1	x2	Sets the horizontal window. The first parameter, x1, is the starting pixel number and the second parameter, x2, is the ending pixel number.
Set Vertical Window	**svw**	y1	y2	Sets the vertical window. The first parameter, y1, is the starting line number and the second parameter, y2, is the ending line number.
Set Horizontal Mode	**shm**	n|w|b|c		Sets the horizontal mode of operation: n = normal w = windowing b = binning c= center
Set Vertical Mode	**svm**	n|w|b		Sets the vertical mode of operation: n = normal w = windowing b = binning

Exposure Control				
Command	**Syntax**	**Parm#1**	**Parm#2**	**Description**
Set Shutter Time	**sst**	off|i		Sets the shutter time: off = disabled i = shutter time in uSeconds
Set Long Integration	**sli**	off|i		Sets the long integration time: off = disabled i = integration time in mSeconds
Set Frame Rate	**sfr**	off|i		Sets the programmable frame rate: off = disabled i = frame rate in frames per second
Set Frame Time	**sft**	off|i		Sets the programmable frame time: off = disabled i = frame time in uSeconds

Trigger Control				
Command	**Syntax**	**Parm#1**	**Parm#2**	**Description**
Set Trigger	**str**	off|cc|et	s|f|d	Sets the trigger mode: off = disabled cc = CC1 et = external s = standard f = fast d = double
Set Trigger Duration	**std**	i		Sets the number for frames to be transmitted after a trigger event has occurred. The valid range is 1 to 249. A value of 250 – 255 indicates that the camera should be free running.
Set Pre Exposure	**spe**	i		Sets the pre-exposure in uSeconds.
Set Double Exposure	**sde**	i		Sets the double exposure in uSeconds.
Set CC Integration	**sci**	off|on		Enables the CC integration mode: off = camera timing determines exposure on = CC1 pulse width determines exposure

Analog Amplifiers					
Command	**Syntax**	**Parm#1**	**Parm#2**	**Parm#3**	**Description**
Set Analog Offset	**sao**	0|1|2	i	j	Sets the analog offset. The first parameter indicates the tap, 1 or 2, and the second parameter indicates the offset ranging from 0 to 255. If the first parameter is 0, then both taps are set as follows: 'sao 0 i' sets both taps to i. 'sao 0 i j' sets tap #1 to i and tap #2 to j.
Set Analog Gain	**sag**	0|1|2	i	j	Sets the analog gain. The first parameter indicates the tap, 1 or 2, and the second parameter indicates the gain in dB ranging from 6 to 40 dB. If the first parameter is 0, then both taps are set as follows: 'sag 0 i' sets both taps to i. 'sag 0 i j' sets tap #1 to i and tap #2 to j.

Strobe Control				
Command	**Syntax**	**Parm#1**	**Parm#2**	**Description**
Set Strobe Position	**ssp**	off|i		Sets the strobe position: off = disabled i = strobe position in uSeconds

Auto Iris Control				
Command	**Syntax**	**Parm#1**	**Parm#2**	**Description**
Set Auto Iris	**sai**	off|i		Sets the auto iris operation: off = disabled i = auto-iris threshold

Temperature Control				
Command	**Syntax**	**Parm#1**	**Parm#2**	**Description**
Set Temperature Alarm	**sta**	on|off		Enables temperature monitoring.
Set Temperature Threshold	**stt**	t1	t2	Sets the temperature alarm thresholds: t1 = alarm on temp threshold in degrees C t2 = alarm off temp threshold in degrees C

Table A.5 – Workspace 'SET' commands

A.6 Retrieving workspace settings

Operating Modes				
Command	**Syntax**	**Parm#1**	**String returned**	**Description**
Get Bit Depth	**gbd**		8|10|12	Returns the current bit depth.
Get Dual Mode	**gdm**		on|off	Returns the current dual mode setting: off = single tap mode on = dual tap mode
Get Lookup Table	**glt**		off|1|2	Returns the current lookup table setting: off = disabled 1 = user #1 2 = user #2
Get Lookup Header	**glh**	1|2	various	Returns the header text of the selected lookup table.
Get Noise Correction	**gnc**		on|off	Returns the current noise correction setting.
Get Image Reversal	**gir**		on|off	Returns the current image reversal setting.
Get Negative Image	**gni**		on|off	Returns the current negative image setting.
Get Test Mode	**gtm**		off|1|2|3	Returns the current test pattern setting: off = disabled 1 = fixed horizontal pattern 2 = fixed vertical pattern 3 = moving vertical pattern
Get Defect Correction	**gdc**		on|off	Returns the current defective pixel correction setting.
Get Flatfield Correction	**gfc**		on|off	Returns the current flat field correction setting.
Get Flatfield Header	**gfh**		various	Returns the header text of the flat field table.

Area of Interest				
Command	**Syntax**	**Parm#1**	**String returned**	**Description**
Get Horizontal Window	**ghw**		x1 x2	Returns the current horizontal window settings where 'x1' is the starting pixel number and 'x2' is the ending pixel number.
Get Vertical Window	**gvw**		y1 y2	Returns the current vertical window settings where 'y1' is the starting line number and 'y2' is the ending line number.
Get Horizontal Mode	**ghm**		n|w|b|c	Returns the current horizontal mode settings: n = normal w = windowing b = binning c=center
Get Vertical Mode	**gvm**		n|w|b	Returns the current vertical mode settings: n = normal w = windowing b = binning

Exposure Control				
Command	**Syntax**	**Parm#1**	**String returned**	**Description**
Get Shutter Time	**gst**		off|i	Returns the current shutter time: off = disabled i = shutter time in uSeconds
Get Long Integration	**gli**		off|i	Returns the current long integration time: off = disabled i = integration time in mSeconds
Get Frame Rate	**gfr**		off|i	Returns the current programmable frame rate: off = disabled i = frame rate in frames per second
Get Frame Time	**gft**		off|i	Returns the current programmable frame time: off = disabled i = frame rate in uSeconds

Trigger Control				
Command	**Syntax**	**Parm#1**	**String returned**	**Description**
Get Trigger	**gtr**		off|cc|et s|f|d	Returns the current trigger mode setting: off = disabled cc = CC1 et = external s = standard f = fast d = double
Get Trigger Duration	**gtd**		i	Returns the current number of frames to be transmitted after a trigger event has occurred. The valid range is 1 to 249. A value of 250 – 255 indicates that the camera is free running.
Get Pre Exposure	**gpe**		i	Returns the current pre-exposure in uSeconds.
Get Double Exposure	**gde**		i	Returns the current double exposure in uSeconds.
Get CC Integration	**gci**		off|on	Returns the current CC integration mode: off = camera timing determines exposure on = CC1 pulse width determines exposure

Analog Amplifiers				
Command	**Syntax**	**Parm#1**	**String returned**	**Description**
Get Analog Offset	**gao**	0|1|2	i j	Returns the current analog offset for the specified channel. The parameter indicates the channel. If the parameter is 0, then both channels are returned.
Get Analog Gain	**gag**	0|1|2	i j	Returns the current analog gain for the specified channel. The parameter indicates the channel. If the parameter is 0, then both channels are returned.

Strobe Control				
Command	**Syntax**	**Parm#1**	**String returned**	**Description**
Get Strobe Position	**gsp**		off|i	Returns the current strobe position: off = disabled i = strobe position in uSeconds

Auto Iris Control				
Command	**Syntax**	**Parm#1**	**String returned**	**Description**
Get Auto Iris	**gai**		off|i	Returns the current auto-iris setting: off = disabled i = auto-iris threshold

Temperature Control				
Command	**Syntax**	**Parm#1**	**String returned**	**Description**
Get Temperature Alarm	**gta**		on|off	Returns the current temperature alarm setting.
Get Temperature Threshold	**gtt**		t1 t2	Returns the temperature alarm thresholds: t1 = alarm on temp threshold in degrees C t2 = alarm off temp threshold in degrees C
Get Current Temperature	**gct**		i	Returns the current camera temperature. i = temperature in degrees C.

Table A.6 – Workspace 'GET' commands

Appendix B

Lynx Terminal

This appendix provides a quick reference to using the Lynx camera download and console utility. This utility is used by both the Camera Link and GigE cameras.

B.1 Overview

Camera download and terminal utility software, the Lynx Terminal, is provided with each camera. After installing the program, the user has access to a 'terminal' console and a 'download' utility. The terminal console provides a command line interface allowing the user to send commands and receive responses from the camera. Whereas the Lynx Configurator utility provides a graphical user interface to the camera, the Lynx Terminal utility provides a command line interface. The download utility allows the user to download newly released software, firmware or a user defined lookup table into the cameras non-volatile memory.

B.2 Setup

When the Lynx Terminal is launched, the following screen will appear:

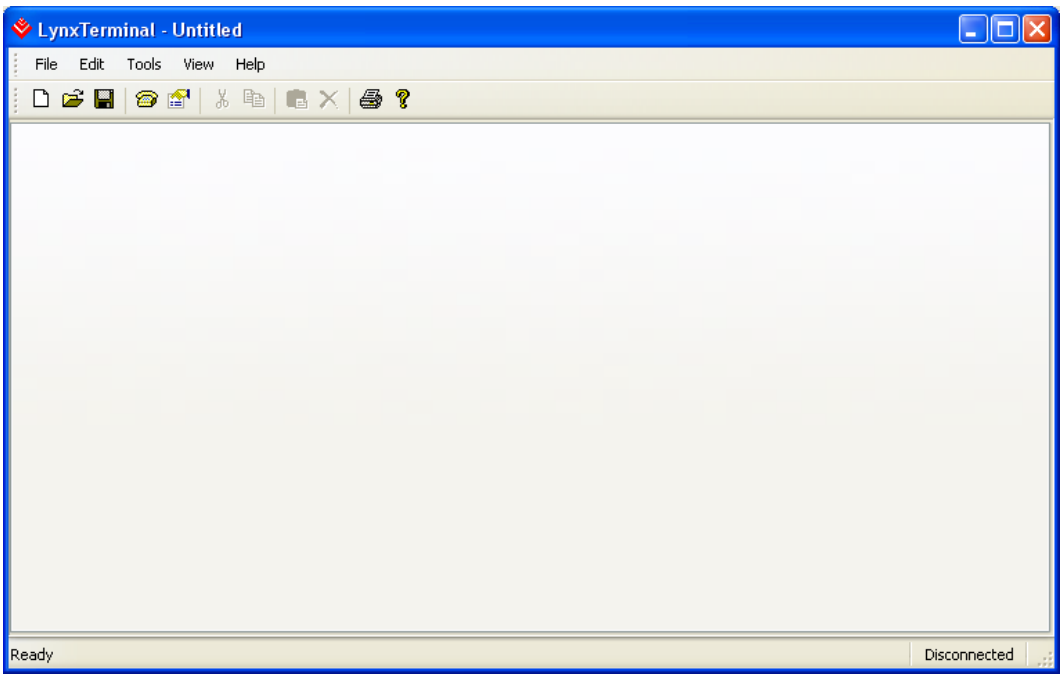

Figure B.1 – LynxTerminal main dialog

The user must first configure the operating parameters of the Lynx Terminal program. Clicking on the 'File' menu item and then 'Properties' will yield the following 'Project Properties' dialog with the 'plug-ins' panel revealed.

Plug-ins Panel:

Clicking on the 'Plug-ins' tab reveals the following panel.

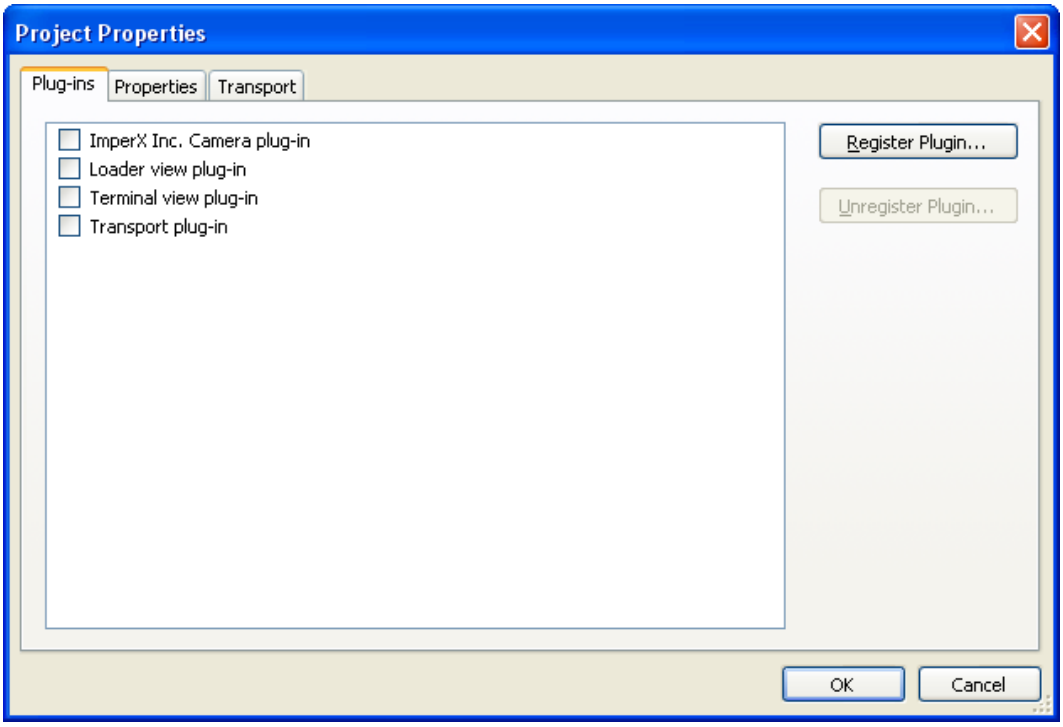

Figure B.2 – Plug-ins panel

Select all of the plug-ins by checking the boxes listed. The next step is to click on the 'Properties' tab.

Properties Panel:

Click on the 'Properties' tab to reveals the following panel. You may select either the 'Camera Link', 'GigE' or 'Serial Transport' options. Select the 'Camera Link' option if the computer is connected to the camera using a Camera Link compliant serial interface. Select the 'GigE' option if the computer is connected to a GigE camera. Select the 'Serial Transport' option if the camera is connected to the computer using a serial COM port.

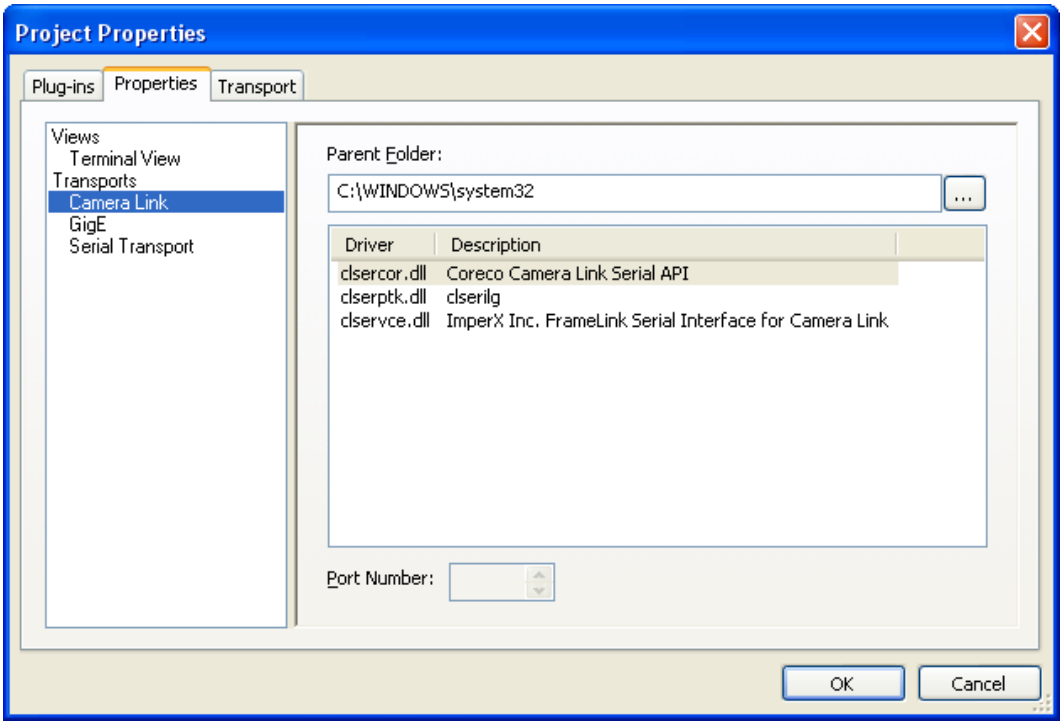

Figure B.3 – Camera Link Transport Properties panel

If you have selected 'Camera Link', then the program will display a list of Camera Link compliant serial interfaces (clser***.dll files) that it has found.
These files are provided by frame grabber vendors. Choose the desired Camera Link interface. The next step is to click on the 'Transport' tab.

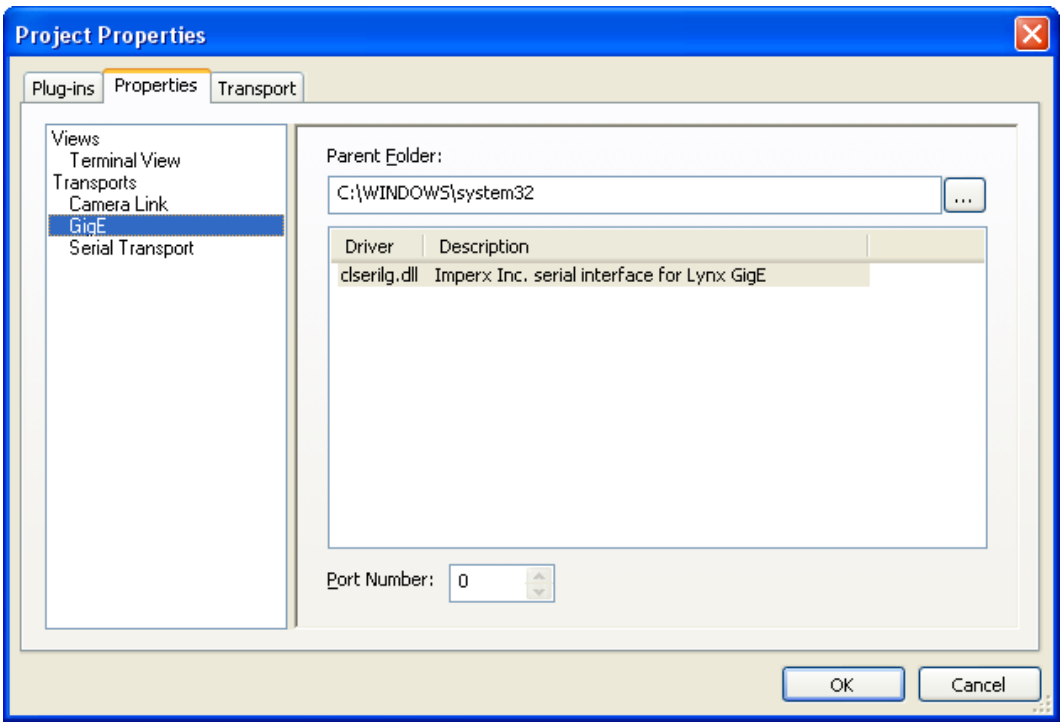

Figure B.4 – GigE Transport Properties panel

If you have selected 'GigE', then the program will display the Imperx clserilg.dll serial interface driver used to connect to GigE cameras. The next step is to click on the 'Transport' tab.

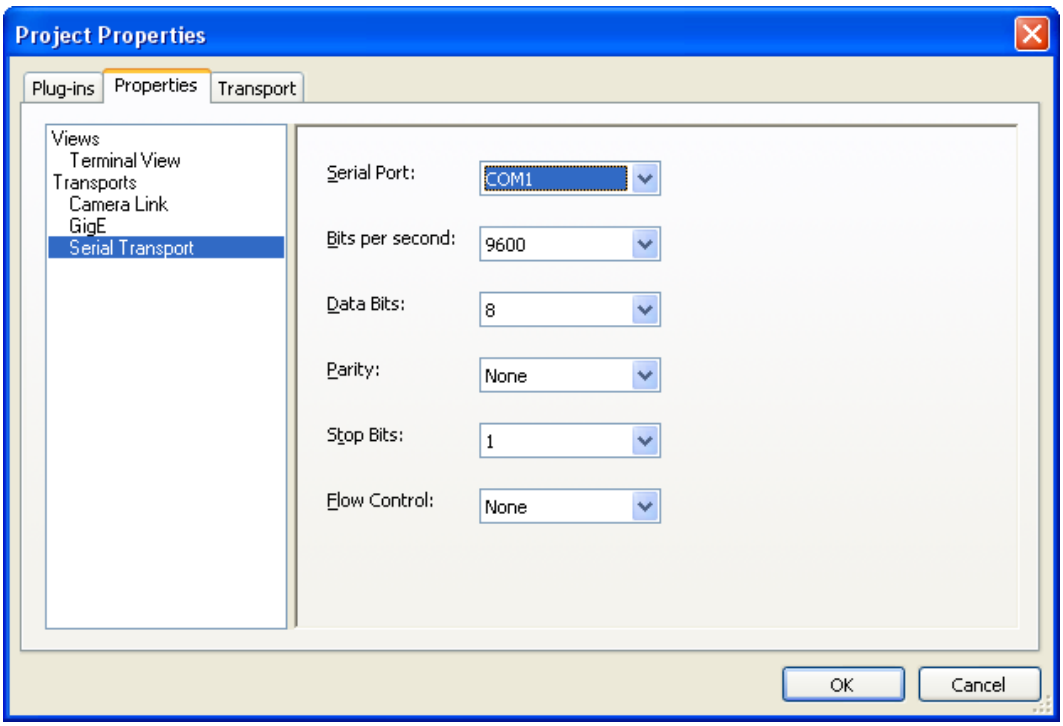

Figure B.5 – Serial Transport Properties panel

If you have selected 'Serial Transport', then you must choose the COM port in the Serial pull-down menu and configure its operating parameters (i.e. 'Bits per second', 'Data Bits', etc.). The next step is to click on the 'Transport' tab.

Transport Panel:

Clicking on the 'Transport' tab reveals the following panel.

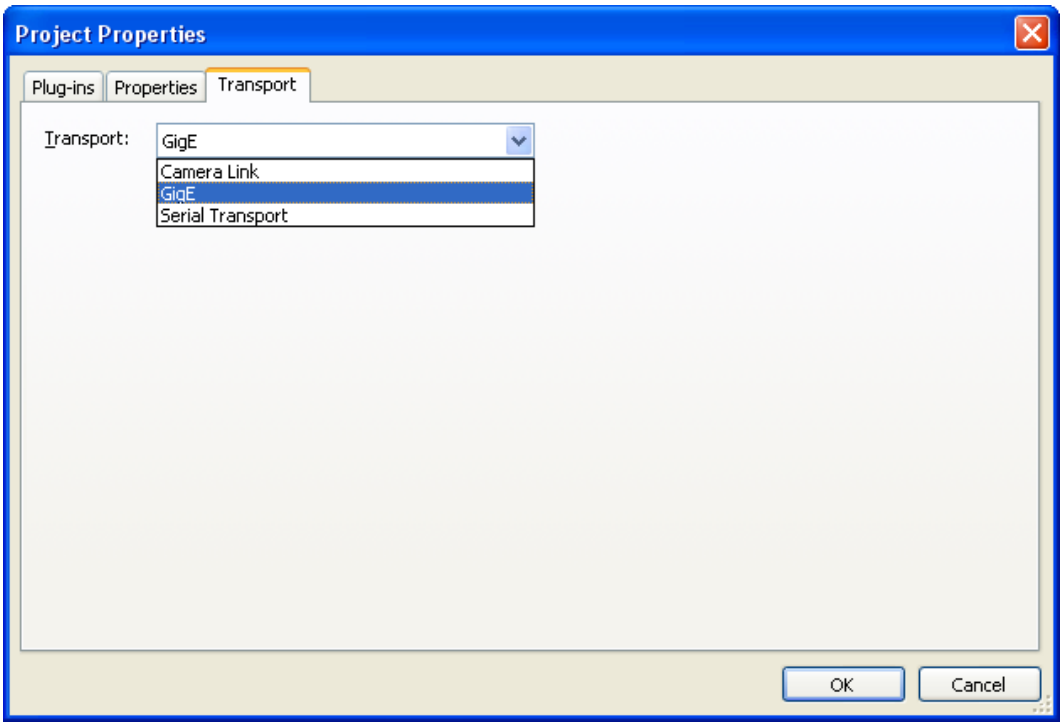

Figure B.5 – Transport dialog

Select the desired interface, Camera Link, GigE or Serial Transport, and click the 'OK' button. All of the above settings will be saved in the registry and will automatically be recalled the next time you invoke the Lynx Terminal program. You are now ready to begin communicating with the camera.

B.3 Download Utility

Selecting the 'Loader View' reveals the following screen.

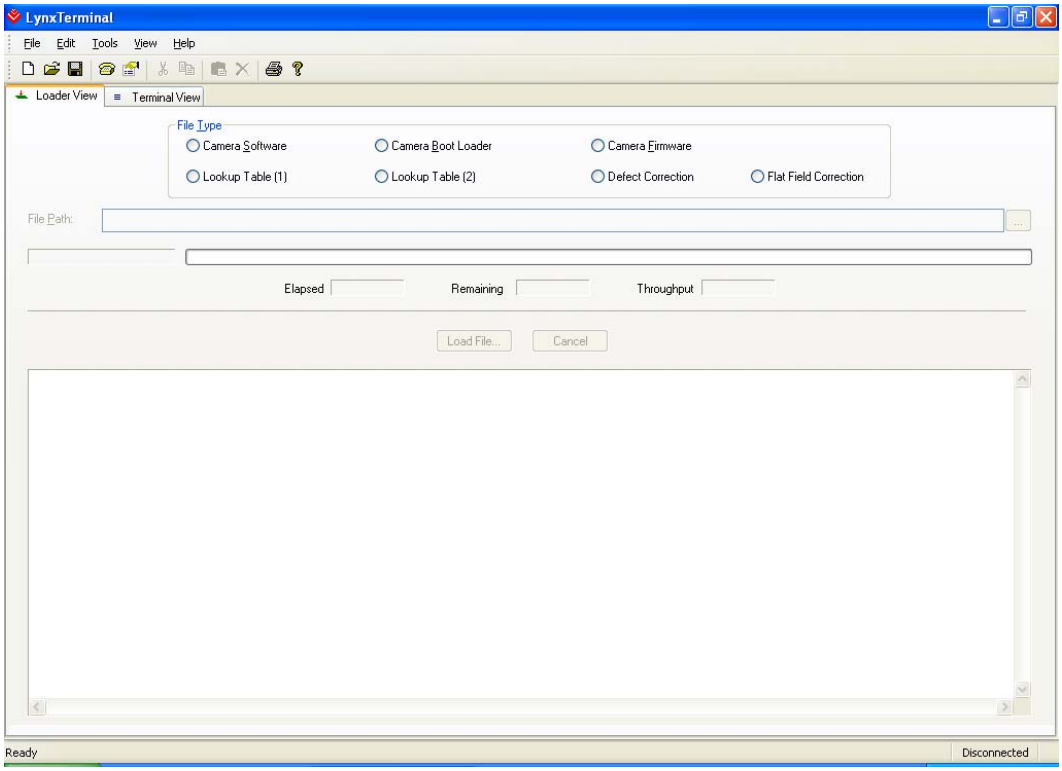

Figure B.6 – Loader View dialog

The user can select to download either new Camera Software, Camera BootLoader, Camera Firmware, a Lookup Table, a Defect Correction table or a Flat Field Correction table by selecting the appropriate button. The path/filename of the file can be entered manually into the edit box or browsed to by clicking on the '…' button. Clicking on the 'Load File…' button begins the download process.

B.4 Terminal Utility

Selecting the 'Terminal View' reveals the following screen.

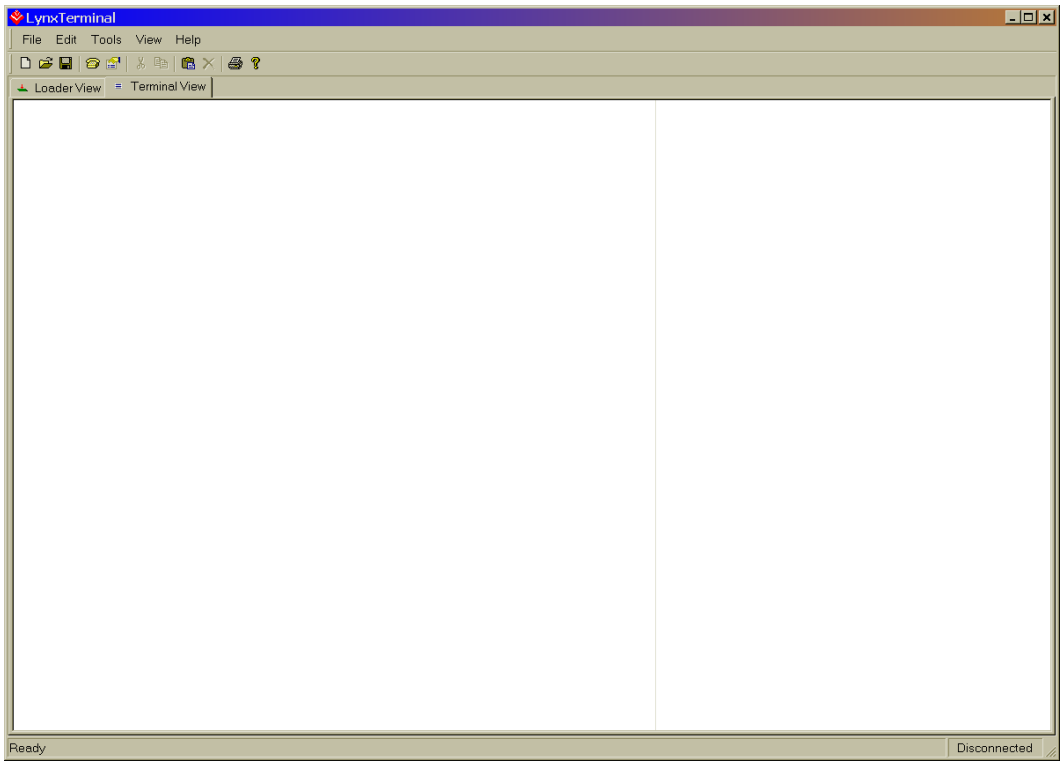

Figure B.7 –Terminal View dialog

The Terminal View is a text console, which the user can use to communicate with the camera. Camera commands (refer to Appendix A) entered into this console will be sent to the camera using the transport method chosen during the Lynx Terminal setup. Camera responses sent by the camera will be displayed in this console as well.

Appendix C

Creating Look Up Tables

This appendix provides a reference on how to create a lookup table using both an ASCII editor and an Excel spreadsheet.

C.1 Overview

The Lookup Table file can be created using any standard ASCII text editor or by using Microsoft Excel. Additionally, any spreadsheet or mathematical program capable of generating a comma delimited file can be used.

C.2 Using an ASCII text editor

A custom LUT (lookup table) can be prepared using any ASCII text editor. Alternatively, any spreadsheet program (i.e. Microsoft Excel) can be used by converting the spreadsheet into a comma delimited (.csv) file. In either case, the file must be renamed to include the .lut extension. The .lut file has two main sections: a header and a table. The 'header' section is a free text area of up to 256 ASCII characters. Each line of the header section must be terminated in a comma. This header is used to document the LUT and will be displayed in response to the user issuing a 'glh' (Get LUT Header) command. The 'table' section of the file contains an array of 4096 lines with each line containing an input value followed by a comma and an output value. The input values represent incoming pixels and the output values represent what each incoming pixel should be converted into as an output pixel.

The format of the .LUT file is as follows:

```
-- Look Up Table input file example,
-- lines beginning with two dashes are comments,
-- and are ignored by parser,
:Header,
-- this is the text that will get displayed with a 'glh' command,
Function is 'Negative Image',
Created by John Doe,
Date 1/14/05,
:Table,
--input output,
      0,4095
      1,4094
      2,4093
      3,4092
      4,4091
      :
      4095,0
```

C.3 Using Microsoft Excel

The .LUT file can be created in Excel as follows:

1 - create the spreadsheet as shown below (note that 4096 rows are required in the table).

2 - add the necessary equations into the output cells to generate the transfer function required.

3 - save the file as a .csv (comma delimited format).

4 - rename the .csv file to an extension of .lut.

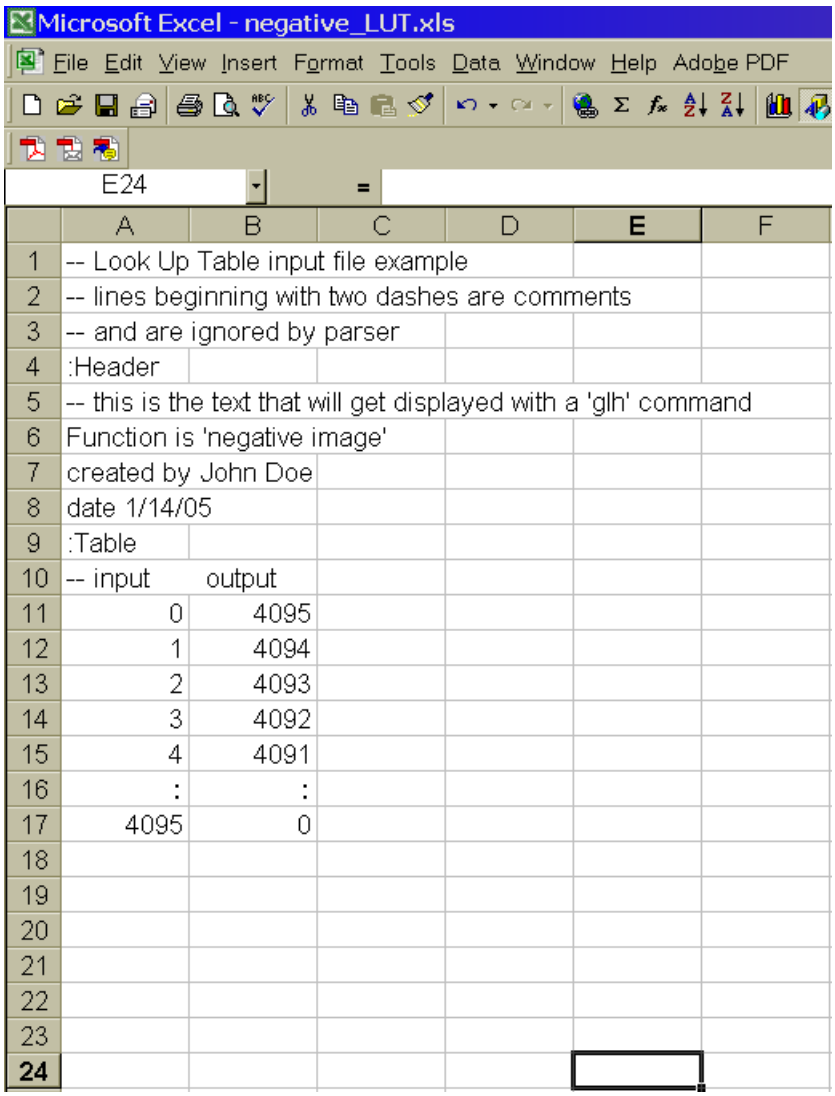

	A	B	C	D	E	F
1	-- Look Up Table input file example					
2	-- lines beginning with two dashes are comments					
3	-- and are ignored by parser					
4	:Header					
5	-- this is the text that will get displayed with a 'glh' command					
6	Function is 'negative image'					
7	created by John Doe					
8	date 1/14/05					
9	:Table					
10	-- input	output				
11	0	4095				
12	1	4094				
13	2	4093				
14	3	4092				
15	4	4091				
16	:	:				
17	4095	0				
18						
19						
20						
21						
22						
23						
24						

Appendix D

LYNX CameraLink Software Installation

This appendix explains how to install the LYNX CameraLink software.

D.1 Software Suite

The LYNX software suite consists of the following files:

Windows XP and 2000 application files:
(located in c:\Program_Files\ImperX\LYNX\ )

LYNX_Configurator.exe	- LYNX Configurator application
LYNX_Terminal.exe	- LYNX Terminal main executable
CameraLinkPlugin.dll	- Camera Link plugin module
LoaderViewPlugin.dll	- Loader view Plugin module
TerminalViewPlugin.dll	- Terminal view Plugin module
TransportPlugin.dll	- Terminal Transport plugin module
Debug.log	
Camconfig.ini	- Configuration settings
LynxConfig.chm	- Compiled HTML help file
NiosTerminalProject.xsd	- XSD file

Documentation files:
(located in c:\Program_Files\ImperX\LYNX\Doc\ )

LYNX_Users_Manual.pdf

Look Up tables:
(located in c:\Program_Files\ImperX\LYNX\LUT\ )

gamma_45.xls	- excel spreadsheet example
gamma_45.LUT	- gamma correction look up table *
posoffset.LUT	- positive offset look up table *

*downloadable to LYNX camera using LYNX_Terminal

D.2 Software Installation from CD

Use the following steps to install the LYNX software supplied on a CD:

1. If a version of LYNX was previously installed on this machine, then you must first remove it:

    1.1 Left mouse click on *"Start"*
    1.2 Left mouse click on *"Settings"*.
    1.3 Left mouse click on *"Control Panel"*.
    1.4 Double left mouse click on *"Add or Remove Programs"*.
    1.5 Left mouse click *"LYNX Software"*.
    1.6 Left mouse click on *"Remove"*.
    1.7 Left mouse click on *"Yes"*.
    1.8 Left mouse click on *"Close"*.
    1.9 If the 'LYNX - InstallShield Wizard' pops-up:
    - Left mouse click on 'Remove'.
    - Click 'Next'.
    - Click 'Yes'.
    - Click 'Finish'.

2. Software Installation from CD

    2.1 Insert the LYNX CD into the appropriate drive; the setup.exe file will run automatically. Note: If it does not start automatically, left mouse click on to *"Start"*, *"Run"*, enter or browse to*"(CD drive): setup.exe"* and click *"OK"*.
    2.2 Wait for the "LYNX - InstallShield Wizard" screen to appear.
    2.3 Follow the on-screen instructions.
    2.4 When finished two new icons will appear on the desktop, one for LYNX Configurator and one for LYNX Terminal.

D.3 Software Upgrade from Web Site

New application and/or driver software may be released periodically to reflect improvements and/or functionality added to the LYNX camera. You can retrieve these updates by visiting the download page of our web site at http://www.imperx.com/support/downloads.php.

1. Use the following steps to install newly released application software:

    1.1 Uninstall all application and driver files by following the instructions in step 1. of the 'Software Installation from CD' section.

1.2 Download the LYNX_Installer_x_x_x_x.exe file (x represents the revision) from the Imperx web site to a new folder on your PC (we will use the folder C:\new_LYNX as an example).

1.3 Left mouse click on *"Start"*, *"Run"* then enter or browse to *"C:\new_LYNX\ LYNX_Installer_x_x_x_x.exe"*.

1.4 Wait for the "LYNX - InstallShield Wizard" screen to appear.

1.5 Follow the on-screen instructions.

1.6 When finished two new icons will appear on the desktop, one for LYNX Configurator and one for LYNX Terminal.

Appendix E

LYNX GigE Software Installation

This appendix explains how to install the LYNX GigE software.

E.1 Software Suite

The LYNX GigE software suite consists of the following files and folders:

Windows XP and 2000 application files:
(located in C:\Program_Files\Imperx\LYNX GigE\Binaries)

LYNX Terminal executable files:
(located in C:\Program_Files\Imperx\LYNX GigE\LYNX Terminal)

Documentation files:
(located in C:\Program_Files\Imperx\LYNX GigE\Documents\ )

SDK files
(.located in: C:\Program_Files\Imperx\LYNX GigE\Includes;
C:\Program_Files\Imperx\LYNX GigE\Libraries;
C:\Program_Files\Imperx\LYNX GigE\Samples

E.2 Software and Driver Installation from CD

Use the following steps to install the LYNX GigE software supplied on a CD:

1. If a version of LYNX GigE was previously installed on this machine, then you must first remove it:

   1.1 Left mouse click on *"Start"*
   1.2 Left mouse click on *"Settings"*.
   1.3 Left mouse click on *"Control Panel"*.
   1.4 Double left mouse click on *"Add or Remove Programs"*.
   1.5 Left mouse click *"LYNX GigE Software"*.
   1.6 Left mouse click on *"Remove"*.
   1.7 Left mouse click on *"Yes"*.
   1.8 Left mouse click on *"Close"*.
   1.9 If the 'LYNX - InstallShield Wizard' pops-up:
   - Left mouse click on 'Remove'.
   - Click 'Next'.
   - Click 'Yes'.
   - Click 'Finish'.

2. Software and driver Installation from CD

   2.1 For a complete set of instructions on LYNX GigE high performance driver installation, please refer to the "LYNX GigE Driver Manual"

2.2 Insert the LYNX GigE CD into the appropriate drive; the setup.exe file will run automatically. Note: If it does not start automatically, left mouse click on to *"Start"*, *"Run"*, enter or browse to*"(CD drive): setup.exe"* and click *"OK"*.

2.2 Wait for the "LYNX GigE - InstallShield Wizard" screen to appear.

2.3 Follow the on-screen instructions.

2.4 When the install is finished, you will be asked to restart the computer:

- 2.4.1 If the Intel Pro1000 NIC card is installed, select "Yes, I want to restart my computer now". Go to Step 2.5.
- 2.4.2 If the card is not installed select "No, I will restart my computer later", and then, click "Finish". Go to Step 2.6.

2.5 After rebooting the user needs to update the Intel Pro1000 NIC card driver, and to replace it with the LYNX GigE high performance driver. Make sure you are logged in with Administrator privileges:

- 2.5.1 Bring up the Control Panel ("Start → Settings → Control Panel") and Select "System."
- 2.5.2 Click on the "Hardware" tab and select "Device Manager."
- 2.5.3 View devices "by Type" and browse through the list until you find "Network Adapters." Expand the list by clicking on the "+" beside Network Adapters.
- 2.5.4 Right click on the Intel network card and select "Properties." It should be named "Intel Pro/1000 MT Desktop Adapter" or equivalent. Select the "Driver" panel, and click on "Update Driver."
- 2.5.5 The Windows wizard will pop up. In the wizard window select "No, not this time", click "Next".
- 2.5.6 A new window will open. Select "Install from a list or specific location (Advanced). Click "Next".
- 2.5.7 A new window will open. Select "Don't search. I will choose the driver to install". Click "Next".
- 2.5.8 In the next window select "Have Disk" and point to the driver location: "C → Program Files → Imperx →LYNX GigE → Drivers → Windows 2000 → Pro1000.inf . Click "Open", then "Next".
- 2.5.9 The driver update window will appear. When the update is done, click "Finish", and close the "Device Manager".
- 2.5.10 Once the LYNX GigE High-Performance IP Device Driver is installed, the "Device Manager" list will report the network adapter as an "Intel Pro/1000 Grabber Adapter" under "Pro/1000 Grabber Devices." Please note that the other network cards used for standard LAN communications should still be found in the network adapter list.
- 2.5.11 If there is a problem following this procedure, please refer to the "LYNX GigE Driver Manual".

2.6 Power OFF the computer and install the Intel Pro1000 NIC card into an available slot. Power the computer ON:

2.6.1 The "Found New Hardware" wizard will pop up. In the wizard window select "No, not this time", click "Next".

2.6.2 A new window will open. Select "Install from a list or specific location (Advanced). Click "Next".

2.6.3 A new window will open. Select "Don't search. I will choose the driver to install". Click "Next".

2.6.4 In the next window select "Have Disk" and point to the driver location: "C → Program Files → Imperx →LYNX GigE → Drivers → Windows 2000 → Pro1000.inf. Click "Open", then "Next".

2.6.5 The driver update window will appear. When the update is done, click "Finish", and close the "Device Manager".

2.6.6 Once the LYNX GigE High-Performance IP Device Driver is installed, the "Device Manager" list will report the network adapter as an "Intel Pro/1000 Grabber Adapter" under "Pro/1000 Grabber Devices." Please note that the other network cards used for standard LAN communications should still be found in the network adapter list.

2.6.7 If there is a problem following this procedure, please refer to "LYNX GigE Driver Manual".

2.4 When finished two new icons will appear on the desktop, one for "LYNX GigE Application" and one for "LYNX Terminal".

E.3 Software Upgrade from Web Site

New application and/or driver software may be released periodically to reflect improvements and/or functionality added to the LYNX GigE camera. You can retrieve these updates by visiting the download page of our web site at http://www.imperx.com/support/downloads.php.

1. Use the following steps to install newly released application software:

1.1 Uninstall all application and driver files by following the instructions in step 1. of the 'Software Installation from CD' section.

1.2 Download the LYNX_GigE_x_x_x.exe file (x represents the revision) from the Imperx web site to a new folder on your PC (we will use the folder C:\new_LYNX.GigE as an example).

1.3 Left mouse click on *"Start"*, *"Run"* then enter or browse to *"C:\new_LYNX GigE\ LYNX_GigE_x_x_x.exe"*.

1.4 Wait for the "LYNX GigE - InstallShield Wizard" screen to appear.

1.5 Follow the on-screen instructions, and the installation procedure as described in section 2 above..

1.6 When finished two new icons will appear on the desktop, one for "LYNX GigE Application" and one for "LYNX Terminal".

E.4 Driver, Software and SDK Documentation

For a detailed description of the high performance driver and driver installation, please refer to "LYNX GigE Driver Manual"

For a detailed description of the LYNX GigE Application software, please refer to the "LYNX GigE Software User's Manual".

For a detailed description of the function calls supported by the SDK, refer to the "LYNX GigE C++ SDK Reference Guide"

Appendix F

LYNX TEC
Operating Manual

This appendix explains how to operate and maintain LYNX TEC cameras.

NOTE: TEC cameras contain pressurized nitrogen in a special front-end assembly, and should never be opened in the field. Only factory-serviceable parts exist within the camera housing.

F.1 Introduction

Lynx thermal electric cooled (TEC) cameras extend dynamic range by reducing CCD sensor temperature and related dark current and thermal noise. The front-housing (CCD chamber) is filled with pure/dry nitrogen to prevent condensation from forming on the CCD. Lynx TEC cameras have an added TEC controller PCB, used for open or closed-loop control of a Peltier element clamped against the CCD.

Lynx TEC cameras have built-in cooling limitations based on the camera housing and/or camera environment. The three limitation settings are: Natural Convection, Fan-Cooled (fan may be remote or attached), and Liquid-Cooled.

The TEC unit can be operated in constant temperature or constant power modes. The TEC status, mode, temperature/power settings, and temperature/power read back values are available through Configurator or Terminal ASCII commands.

F.2 Control Tab

The TEC Control Tab in the Lynx Configurator controls and monitors TEC operation. TEC constant power/temp mode, cooling limits, and power/temp settings can be saved and restored on camera power-up in User1 or User2 non-volatile storage. From the factory, the TEC unit defaults to the following settings on camera power-on:

Mode: Constant Power
Limits: Natural Convection
Setting : 3W (4M TEC camera) or 6W (11M/16M TEC cameras)

Figure 1 details the control surface. The upper pair of sliders in the TEC Control Tab are used to set TEC power or temperature values. The lower pair of sliders indicate TEC power and temperature readings from inside the unit. The "Read" button updates the TEC power and temperature readings. The "Read Continuous" checkbox updates power and temperature readings at regular one second intervals. The user can select different sample intervals by adding a "CurrentTEC" variable to the camconfig file. Please see the Camera Configuration section for further details.

Note: "Read Continuous" is only intended for set up and maintenance and should be turned off when capturing images to prevent any possibility of digital noise corrupting the image.

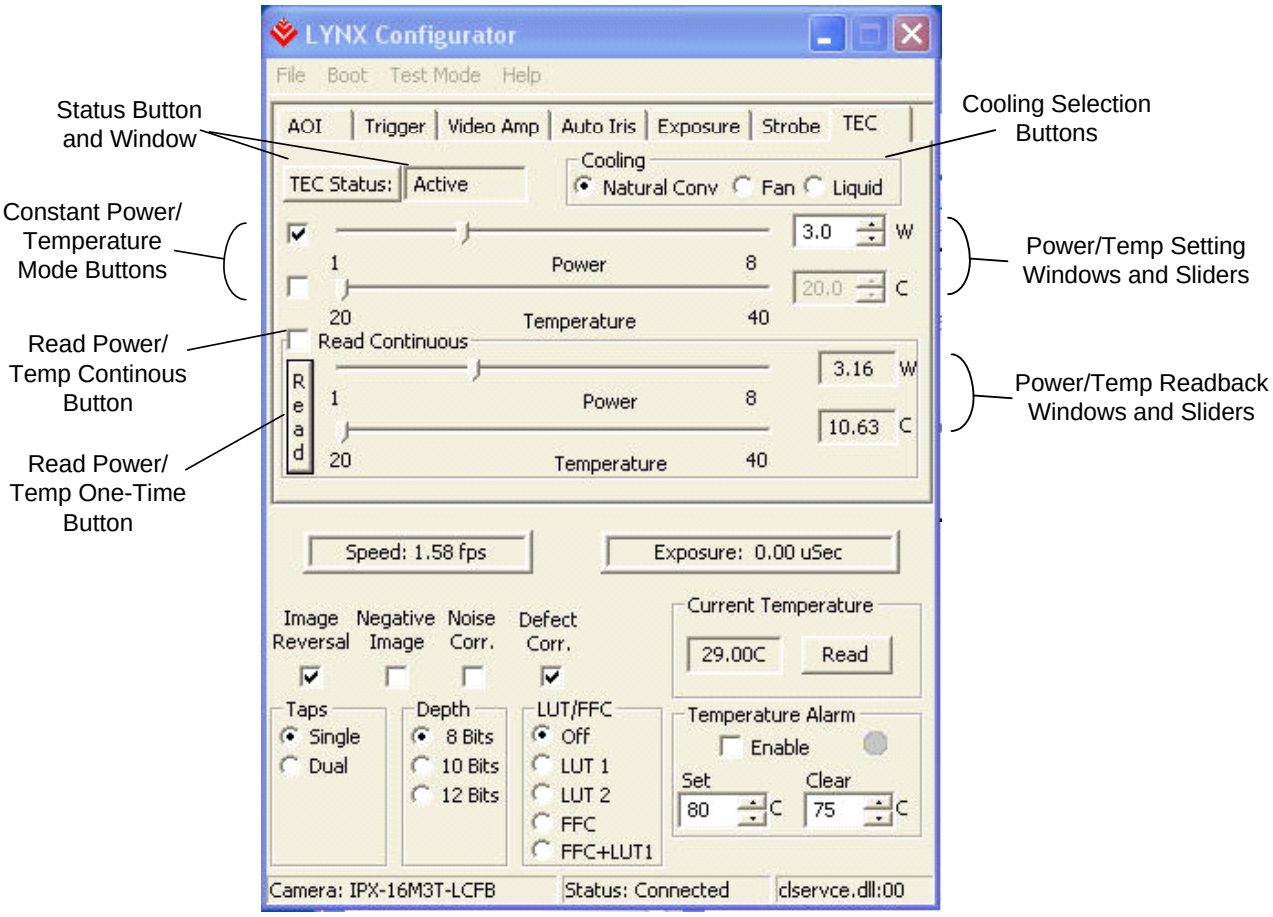

Figure F.1 TEC Control Tab

F.3 Constant Power Mode

Constant power mode has the advantage of a fixed stable camera current and is not likely to go into thermal shutdown or protection mode. In this mode the lowest possible CCD temperature for a given current is achieved. The CCD temperature is a function of power setting and housing(heatsink) temperature.

In Constant Power mode, the user selects a TEC power setting. The TEC control unit applies closed-loop control to regulate TEC power as close as possible to the set value. Note that CCD heating is not a provided option. Recommended power setting limits depend on camera model and heat dissipation capabilities:

Natural Convection:	1.00W to 8.00W (11M/16M TEC) or 1.00W to 5.00W (4M TEC)
Fan-Cooled:	1.00W to 15.00W (11M/16M TEC) or 1.00W to 10.0W (4M TEC)
Liquid-Cooled:	1.00W to 20.00W (11M/16M TEC) or 1.00W to 15.0W (4M TEC)

F.4 Constant Temperature Mode

Constant temperature mode has the advantage of keeping the CCD temperature stable
within a tight +/-.5 degC window but the cooler operates at a variable current with higher peak values. Therefore, the cooler efficiency is decreased and heat dissipation increases. If the ambient temperature is too high or air flow is insufficient (for the selected
temperature setting) the TEC control can go into thermal runaway which will trip the protection function. The user needs to determine which temperature setting is sustainable in the actual environment. Therefore this mode is not generally recommended under the following conditions:

(a) High and variable ambient > +30 degC.
(b) Remote installation without monitoring the camera temperature.
(c) Limited +12V supply current.

No damage to the camera will result from the TEC unit going into protection mode but CCD cooling will be reduced to a fixed lower level.

In Constant Temperature mode, the user selects a TEC temperature setting. The TEC control unit applies closed-loop control to regulate TEC temperature as close as possible to the set value. Note that TEC heating is not a provided option. Recommended temperature setting limits depend on camera model and heat dissipation capabilities:

Natural Convection:	20.00C to 40.00C (11M/16M TEC) or 15.0C to 40.00C (4M TEC)
Fan-Cooled:	10.00C to 40.00C
Liquid-Cooled:	5.00C to 40.00C

F.5 Operating Modes

The status of the TEC camera can be queried by pressing the "TEC Status" button on the Configurator tab, or by sending individual Terminal commands for status.

Self-Test Mode
TEC cameras have a Built-In-Self-Test (BIST) feature that is automatically activated following camera power-on. The Configurator TEC Status "Self-Test" is reported during an initial 30-second BIST period. During the Self-Test period, the TEC controller tests cooler and temperature read back functions. The Self-Test algorithm:

(a) Sample TEC temperature for a baseline reading (baseline-sample).

(b) Set TEC mode to constant power.
(c) Set TEC power setting to 8.0W.
(d) Wait for ~30 seconds.
(e) Sample TEC temperature for a comparison reading (comparison-sample).
(f) If (baseline-temp-sample - comparison_temp_sample) ≥ 3 degC then BIST test passes. Otherwise the BIST test fails, and the TEC cooler is shutdown.

If Self-Test "passes", the TEC unit is released to the user for normal operation, and a TEC status "Active" is returned. Otherwise, the TEC unit is turned off to protect the camera and "Shutdown" status is reported. The only way to re-run the TEC BIST is to re-power the camera.

Active Mode
This is the normal operating mode of the TEC camera. A returned TEC Status "Active" indicates that the TEC unit is cooling properly.

Shutdown Mode
If the TEC BIST "fails", the TEC cooler is turned off, and TEC Status is reported as "Shutdown". Shutdown mode indicates that the TEC unit is either not cooling properly or temperature read back is broken. TEC "Shutdown" status indicates potential camera hardware problems and customer service should be contacted immediately.

Protect Mode
A self-protect feature is built into the TEC Controller firmware to reduce excessive TEC current for an extended period of time. If constant current greater than 2.0A is detected for ~3.5 minutes, then the TEC unit forced to a safe settings, and TEC Status "Protect" is reported. All power, temperature, and mode settings are ignored. The protect mode can only be exited by re-powering the camera.

F.6 Commands

Command	Syntax	Parm	String Returned	Description
Set TEC Mode	sto	t|p		Set TEC operating mode to constant temperature (t) or constant power (p).
Get TEC Mode	gto		t|p	Returns TEC constant power or temperature mode setting.
Set TEC Limits	stl	n|f|l		Set TEC limits to natural convection (n), fan-cooled (f), liquid cooled (l).
Get TEC Limits	gtl		n|f|l	Returns TEC cooling limits setting.
Set Power Value (note 1)	spv	data		Set TEC power value (W). Valid range depends on cooling limits. Format: XX.X
Get Power Value	gpv		data	Returns TEC Power value setting (W). Format: XX.X
Set Temp Value (note 2)	stv	data		Set TEC temperature value (degC). Valid range depends on cooling limits. Format: XX.X (2.1 fixed-point)
Get Temp Value	gtv		data	Returns TEC temperature value setting (degC). Valid range depends on cooling limits. Format: XX.X (2.1 fixed-point)
Get Power Current	gpc		data	Returns current TEC power reading (W). Format: XX.XX (2.2 fixed-point)
Get Temp Current	gtc		data	Returns current TEC temperature reading (degC). Format: XX.XX (2.2 fixed-point)
Set Cooler Switch	sts	on|off		Set TEC cooler "on" or "off" switch. Only available in **Supervisor Mode .**
Get Cooler Switch	gts		on|off	Returns TEC cooler status.
Get DAC Value	gdv		i	Returns current TEC Controller DAC count. Format: 10-bit integer.
Get BIST Activity	gtb		active| inactive	Returns TEC Built-In-Self_Test activity.
Get BIST Status	gtb		pass|fail	Returns TEC Built-In-Self_Test status.
Get TEC Protection Status	gtp		on|off	Returns TEC self-protection status.
Get TEC Fault Status	gtu		true|false	Returns TEC cooler unit fault status.
Get TEC Firmware Revision	gtf		data	Returns TEC controller firmware revision. Format: XX.XX (2.2 fixed-point)

Table F.1: TEC Commands

F.7 Configuration Settings

CurrentTEC variable

Adding the "CurrentTEC" variable to the camconfig file controls the sample rate for continous readback mode. This variable is specified in milliseconds. For example, sampling the TEC power and temperature read back every 2 seconds would be specifed as: CurrentTEC=2000.

F.8 Maintenance

NOTE: Due to TEC camera pressurized nitrogen in the front-end, these cameras should never be opened in the field. Only factory-serviceable parts exist within the camera housing.

The recommended maintenance schedule for nitrogen level is as follows:

- The camera is shipped with 1 to 1.5 psi (70 to 100mBar) initial fill pressure. The initial charge can last from 6 to 18 month depending on usage and thermal cycling.
- It is very important not to let the charge leak down too far because if condensation does occur it may leave spots on the CCD cover glass, which cannot be removed completely.
- Therefore the nitrogen level l (pressure) should be checked every 6 to 12 month depending on operating conditions. See nitrogen check/fill procedure for details. (available upon request if not supplied with camera)
- Minimum safe nitrogen level is .3 to .5psi (20 to 35 mBar).
- Checking the nitrogen level requires a pressure manometer (EXTECH model#406800 or equivalent) and a supply of pure dry nitrogen because some charge will be lost during the checking process. If either one is not available return camera to IMPERX or local distributor for service.